TOSHIBA

FILE NO. SVM-15067-11

SERVICE MANUAL

AIR-CONDITIONER (MULTI TYPE)

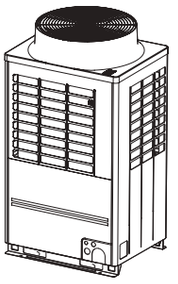

<SUPER MODULAR MULTI SYSTEM - e>

Outdoor Unit

Model name:

<Heat Pump Model>

MMY-MAP0806HT8(J)P	MMY-MAP0806HT7(J)P	MMY-MAP0806HT8(J)P-ME
MMY-MAP1006HT8(J)P	MMY-MAP1006HT7(J)P	MMY-MAP1006HT8(J)P-ME
MMY-MAP1206HT8(J)P	MMY-MAP1206HT7(J)P	MMY-MAP1206HT8(J)P-ME
MMY-MAP1406HT8(J)P	MMY-MAP1406HT7(J)P	MMY-MAP1406HT8(J)P-ME
MMY-MAP1606HT8(J)P	MMY-MAP1606HT7(J)P	MMY-MAP1606HT8(J)P-ME
MMY-MAP1806HT8(J)P	MMY-MAP1806HT7(J)P	MMY-MAP1806HT8(J)P-ME
MMY-MAP2006HT8(J)P	MMY-MAP2006HT7(J)P	MMY-MAP2006HT8(J)P-ME
MMY-MAP2206HT8(J)P	MMY-MAP2206HT7(J)P	

MMY-MAP0806HT8(J)P-E	MMY-MAP0806HT8(J)P-TR	MMY-MAP0806HT7P-ME
MMY-MAP1006HT8(J)P-E	MMY-MAP1006HT8(J)P-TR	MMY-MAP1006HT7P-ME
MMY-MAP1206HT8(J)P-E	MMY-MAP1206HT8(J)P-TR	MMY-MAP1206HT7P-ME
MMY-MAP1406HT8(J)P-E	MMY-MAP1406HT8(J)P-TR	MMY-MAP1406HT7P-ME
MMY-MAP1606HT8(J)P-E	MMY-MAP1606HT8(J)P-TR	MMY-MAP1606HT7P-ME
MMY-MAP1806HT8(J)P-E	MMY-MAP1806HT8(J)P-TR	MMY-MAP1806HT7P-ME
MMY-MAP2006HT8(J)P-E	MMY-MAP2006HT8(J)P-TR	MMY-MAP2006HT7P-ME
MMY-MAP2206HT8(J)P-E	MMY-MAP2206HT8(J)P-TR	

MMY-MAP0806HT8P-A	MMY-MAP1606HT8P-C
MMY-MAP1006HT8P-A	MMY-MAP1806HT8P-C
MMY-MAP1206HT8P-A	MMY-MAP2006HT8P-C
MMY-MAP1406HT8P-A	MMY-MAP2206HT8P-C
MMY-MAP1606HT8P-A	
MMY-MAP1806HT8P-A	
MMY-MAP2006HT8P-A	

<Cooling Only Model>

MMY-MAP0806T8(J)P-E	MMY-MAP0806T8(J)P	MMY-MAP0806T7(J)P
MMY-MAP1006T8(J)P-E	MMY-MAP1006T8(J)P	MMY-MAP1006T7(J)P
MMY-MAP1206T8(J)P-E	MMY-MAP1206T8(J)P	MMY-MAP1206T7(J)P
MMY-MAP1406T8(J)P-E	MMY-MAP14B6T8(J)P	MMY-MAP14B6T7(J)P
MMY-MAP1606T8(J)P-E	MMY-MAP1406T8(J)P	MMY-MAP1406T7(J)P
MMY-MAP1806T8(J)P-E	MMY-MAP1606T8(J)P	MMY-MAP1606T7(J)P
MMY-MAP2006T8(J)P-E	MMY-MAP18B6T8(J)P	MMY-MAP18B6T7(J)P
MMY-MAP2206T8(J)P-E	MMY-MAP1806T8(J)P	MMY-MAP1806T7(J)P
	MMY-MAP2006T8(J)P	MMY-MAP2006T7(J)P
	MMY-MAP2206T8(J)P	MMY-MAP2206T7(J)P

MMY-MAP0806T8P-SG	MMY-MAP0806T8(J)P-ID	MMY-MAP0806T8(J)P-T
MMY-MAP1006T8P-SG	MMY-MAP1006T8(J)P-ID	MMY-MAP1006T8(J)P-T
MMY-MAP1206T8P-SG	MMY-MAP1206T8(J)P-ID	MMY-MAP1206T8(J)P-T
MMY-MAP14B6T8P-SG	MMY-MAP14B6T8(J)P-ID	MMY-MAP14B6T8(J)P-T
MMY-MAP1406T8P-SG	MMY-MAP1406T8(J)P-ID	MMY-MAP1406T8(J)P-T
MMY-MAP1606T8P-SG	MMY-MAP1606T8(J)P-ID	MMY-MAP1606T8(J)P-T
MMY-MAP18B6T8P-SG	MMY-MAP18B6T8(J)P-ID	MMY-MAP18B6T8(J)P-T
MMY-MAP1806T8P-SG	MMY-MAP1806T8(J)P-ID	MMY-MAP1806T8(J)P-T
MMY-MAP2006T8P-SG	MMY-MAP2006T8(J)P-ID	MMY-MAP2006T8(J)P-T
MMY-MAP2206T8P-SG	MMY-MAP2206T8(J)P-ID	MMY-MAP2206T8(J)P-T

Revised on October, 2018

Contents

SAFETY CAUTION 5

Refrigerant (R410A) 25

1 Wiring Diagrams 27

1-1. Outdoor Unit. 27

2 Parts Rating. 36

2-1. Outdoor Unit (50Hz model: MMY-MAP∗∗∗6∗T8∗P∗) 36

2-2. Outdoor Unit (60Hz model: MMY-MAP∗∗∗6HT7∗P) 37

2-3. Outdoor Inverter (50/60Hz model: MMY-MAP∗∗∗6∗T8/7∗P∗) 38

2-4. Parts Layout in Outdoor Unit 39

2-5. Parts Layout in Inverter Assembly 42

2-6. Outdoor (Inverter) Print Circuit Board 45

2-6-1. Interface P.C. board (MCC-1673) 45

2-6-2. Inverter P.C. board for compressor (MCC-1660) A3-IPDU 46

2-6-3. Inverter P.C. board for compressor (MCC-1669) A3-IPDU. 47

2-6-4. Inverter P.C. board for fan motor (MCC-1659) FAN-IPDU 48

2-6-5. Noise Filer PC board (MCC-1608 -A, -B) 49

3 Refrigerant Piping Systematic Drawing 50

4 Combined Refrigerant Piping System Schematic Diagrams 61

4-1. Normal Operation (COOL Mode / DEFROST Mode) -
High Outside Air Temperature (Roughly 20°C or Above) 61

4-2. Normal Operation (COOL Mode) - Low Outside Air Temperature (Roughly Below 20°C). 62

4-3. Normal Operation (HEAT Mode) 63

4-4. Normal Operation (HOT GAS DEFROST Mode) 64

4-5. Emergency Operation (Cooling Operation under Header Outdoor Unit Backup Scenario) 65

4-6. Emergency Operation (Heating Operation under Header Outdoor Unit Backup Scenario) 66

4-7. Refrigerant Recovery from Failed Outdoor Unit (Pump-Down Operation under
Follower Outdoor Unit Backup Scenario). 67

5 Control Outline 68

6 Applied Control and Functions 77

6-1. Applied Control for Indoor Unit 77

6-1-1. Control Specifications 77

6-1-2. Optional Connector Specifications of Indoor P.C. Board 83

6-1-3. Test Operation of Indoor Unit 84

6-1-4. Method to Set Indoor Unit Function DN Code 85

6-1-5. Applied Control of Indoor Unit 89

6-2. Applied control for Outdoor Unit. 92

6-2-1. Outdoor Fan High Static Pressure Shift. 92

6-2-2. Priority Operation Mode Setting. 95

6-2-3. Applied Control of Outdoor Unit 97

6-2-4. Power peak-cut Control (Standard) 98

6-2-5. Power peak-cut Control (Extended). 99

6-2-6. Snowfall Fan Control 100

6-2-7. External master ON/OFF Control 100
6-2-8. Night operation (sound reduction) Control 101
6-2-9. Operation Mode Selection Control 102
6-2-10. Error/Operation Output 103
6-2-11. Compressor Operation Output 104
6-2-12. Operating Rate Output 105

7 TEST OPERATION 106

7-1. Procedure and Summary of Test Operation 106
7-2. Check Items before Test Operation (before powering-on) 107
7-3. Check at Main Power-on 111
7-4. Address Setup 112
7-4-1. Precautions 112
7-4-2. Address Setup and Check Procedure 112
7-4-3. Address Setup Procedure 113
7-4-4. Check after Address Setup when Central Control System Is Connected 126
7-5. Troubleshooting in Test Operation 127
7-5-1. A Check Code is Displayed on the Remote Controller 127
7-5-2. Operation from the indoor remote controller is not accepted, and a check code is displayed on the 7-segment display of the interface PC board of the header unit. . . . 128
7-5-3. There is no display of a check code on the 7-segment display on the interface PC board of the header unit, although there is indoor unit that is not accepting operation from the indoor remote controller. 128
7-5-4. In checking the number of connected outdoor units and connected indoor units after address setup, a lower number of connected units is displayed. (There are outdoor/indoor units that do not operate in a test operation.) 129
7-6. Test Operation Check 131
7-6-1. Fan Check 131
7-6-2. Single cooling/Single heating Test Operation Check 132
7-7. Service Support Function 135
7-7-1. Check Function for Connecting of Refrigerant and Control Lines 135
7-7-2. Function to Start/Stop (ON/OFF) Indoor Unit from Outdoor Unit 138
7-7-3. Check Code Clearing Function 144
7-7-4. Remote Controller Distinction Function 146
7-7-5. Pulse Motor Valve (PMV) Forced Open/Close Function in Indoor Unit 147
7-7-6. Pulse Motor Valve (PMV) Forced Open Fully/Close fully Function in Outdoor Unit . . 147
7-7-7. Solenoid Valve Forced Open/Close Function in Outdoor Unit 148
7-7-8. Fan Operation Check in Outdoor Unit 149
7-7-9. Abnormal Outdoor Unit Discrimination Method By Fan Operating Function 150
7-7-10. Manual Adjustment Function of Outside Temperature (TO) Sensor 151
7-7-11. Refrigerant leakage detection 153
7-7-12. Monitor Function of Remote Controller Switch 154
7-8. SMMS WAVE TOOL FOR SMARTPHONE 156
7-8-1. Prohibition/Permission of the NFC Setting 156
7-8-2. Confirmation for the generation of the error of the NFC 157
7-9. DRED (Demand response enabling device) 158

8 TROUBLESHOOTING 160
8-1. Overview 160
8-2. Troubleshooting Method 161
8-3. Troubleshooting Based on Information Displayed on Remote Controller 167
8-4. Check Codes Displayed on Remote Controller and SMMS-e Outdoor Unit (7-Segment Display on I/F Board) and Locations to Be Checked 172
8-5. Diagnosis procedure for each check code 189
8-6. 7-Segment Display Function 219
8-7. Oil Level Judgment Display 225
8-8. SMMS-e Outdoor Interface P.C. Board Function Setting Exchange Table. 226
8-9. Leakage/Clogging of Refrigerating Cycle Circuit 229
8-10. Sensor Characteristics 235
8-11. Pressure Sensor Output Check 238

9 BACKUP OPERATION (EMERGENCY OPERATION) 240
9-1. Note for Backup Operation 240
9-2. Compressor Backup Operation Setting 241
9-3. Outdoor Unit Backup Operation Setting 244
9-3-1. Follower outdoor unit backup operation setting (failure of follower outdoor unit) 244
9-3-2. Header outdoor unit backup operation setting (failure of header outdoor unit) 246
9-4. Cooling-Season Outdoor Unit Backup Operation Setting 248

10 OUTDOOR UNIT REFRIGERANT RECOVERY METHOD 249
10-1. Refrigerant Recovery from Failed Outdoor Unit (Pump-Down) 249
10-1-1. Note for refrigerant recovery operation 249
10-1-2. Refrigerant recovery procedure A (Case of no outdoor unit backup operation setting) ..249
10-1-3. Refrigerant recovery procedure B (Case of outdoor unit backup operation setting) 252
10-2. How to Operate System While Failed Outdoor Unit Being Repaired 254
10-3. Work procedure after Repair 255

11 REPLACING COMPRESSORS 256
11-1. Compressor Replacement Procedure (Outline) 256
11-2. Replacement of Compressors 257
11-3. Check Procedure to Search Cause of Compressor Oil Shortage 263

12 OUTDOOR UNIT PARTS REPLACEMENT METHODS 267

13 P.C. BOARD EXCHANGE PROCEDURES 286
13-1. Replacement of Outdoor P.C. Boards 286
13-1-1. List of service P.C. boards 286
13-1-2. Configuration of inverter assembly 286
13-1-3. Interface P.C. Board (MCC-1673) Replacement Procedure 288
13-1-4. Comp-IPDU P.C. Board (MCC-1669) Replacement Procedure 290
13-1-5. Comp-IPDU P.C. Board (MCC-1669) Replacement Procedure 292
13-1-6. Comp-IPDU P.C. Board (MCC-1660) Replacement Procedure 294
13-1-7. Fan-IPDU P.C. Board (MCC-1659) Replacement Procedure 296
13-1-8. Noise Filter P.C. Board (MCC-1608A, B) Replacement Procedure 298
13-1-9. Noise Filter P.C. Board (MCC-1608A, B) Replacement Procedure 300
13-1-10. Noise Filter P.C. Board (MCC-1608A, B) Replacement Procedure 302

14 EXPLODED DIAGRAM/PARTS LIST 304

This service manual provides relevant explanations about new outdoor unit (SMMS-e).
Please refer to the following service manuals for each indoor units.

	SVM File No.
<4-way Cassette Type> (MMU-AP***4HP-E) (Made in Thailand model) (MMU-AP***4HY-C) (Made in China model) (MMU-AP***2H-C) (Made in Japan model)	 SVM-13011 A10-1402 A11-008-2
<2-way Cassette Type> (MMU-AP****WH) (MMU-AP***2WH-C) (Made in Japan model)	 A10-007 A11-008-2
<Concealed Duct Standard Type> (MMD-AP****BHP*) (Made in Thailand model) (MMD-AP***6BHY-C) (Made in China model) (MMD-AP***4BH-C) (Made in Japan model)	 SVM-14069 A10-1415 A11-008-2
<Slim Duct Type> (MMD-AP2244SPH-E, AP274SPH-E) (MMD-AP***6M(P)HY-C) (Made in China model) (MMD-AP***4S(P)H-C) (Made in Japan model)	 A12-005 A10-1403 A11-008-2
<Concealed Duct High Static Pressure Type> (MMD-AP***6HP*) (Made in Thailand model) (MMD-AP***4H-C) (Made in Japan model)	 SVM-15032 A11-008-2
<High-wall Compact Type> (MMK-AP****MH-E) (Made in Thailand model)	 SVM-05052-1
<High-wall Type> (MMK-AP****H*) (Made in Thailand model)	 SVM-09059
<Ceiling Type> (MMC-AP***7HP*) (Made in Thailand model) (MMC-AP***4H-C) (Made in Japan model)	 SVM-13085 A11-008-2
<Floor Standing Type> (MMF-AP***6H*) (MMF-AP***4H-C) (Made in Japan model)	 A10-1420 A11-008-2
Console Type (MML-AP****NH-E) (Made in Thailand model) (MML-AP***4NH-C) (Made in Thailand model)	 SVM-11012 SVM-11036
<Air to Air Heat Exchanger with DX Coil Unit Type> (MMD-VN****HEXE*)	 A10-022
<Fresh Air Intake Indoor Unit Type> (MMD-AP****HFE)	 A06-016
<HOT WATER MODULE> (MMW-AP****LQ-E)	 A10-1412
<Other indoor units> (MM*-AP****H*) (MM*-AP***4*H-C) (Made in Japan model)	 A10-033 A11-008-2

SAFETY CAUTION

Please read carefully through these instructions that contain important information which complies with the “Machinery” Directive (Directive 2006/42/EC), and ensure that you understand them.

Some of the details provided in these instructions differ from the service manual, and the instructions provided here take precedence.

Generic Denomination: Air Conditioner

Definition of Qualified Installer or Qualified Service Person

The air conditioner must be installed, maintained, repaired and removed by a qualified installer or qualified service person. When any of these jobs is to be done, ask a qualified installer or qualified service person to do them for you.

A qualified installer or qualified service person is an agent who has the qualifications and knowledge described in the table below.

Agent	Qualifications and knowledge which the agent must have
Qualified installer	• The qualified installer is a person who installs, maintains, relocates and removes the air conditioners made by Toshiba Carrier Corporation. He or she has been trained to install, maintain, relocate and remove the air conditioners made by Toshiba Carrier Corporation or, alternatively, he or she has been instructed in such operations by an individual or individuals who have been trained and is thus thoroughly acquainted with the knowledge related to these operations. • The qualified installer who is allowed to do the electrical work involved in installation, relocation and removal has the qualifications pertaining to this electrical work as stipulated by the local laws and regulations, and he or she is a person who has been trained in matters relating to electrical work on the air conditioners made by Toshiba Carrier Corporation or, alternatively, he or she has been instructed in such matters by an individual or individuals who have been trained and is thus thoroughly acquainted with the knowledge related to this work. • The qualified installer who is allowed to do the refrigerant handling and piping work involved in installation, relocation and removal has the qualifications pertaining to this refrigerant handling and piping work as stipulated by the local laws and regulations, and he or she is a person who has been trained in matters relating to refrigerant handling and piping work on the air conditioners made by Toshiba Carrier Corporation or, alternatively, he or she has been instructed in such matters by an individual or individuals who have been trained and is thus thoroughly acquainted with the knowledge related to this work. • The qualified installer who is allowed to work at heights has been trained in matters relating to working at heights with the air conditioners made by Toshiba Carrier Corporation or, alternatively, he or she has been instructed in such matters by an individual or individuals who have been trained and is thus thoroughly acquainted with the knowledge related to this work.
Qualified service person	• The qualified service person is a person who installs, repairs, maintains, relocates and removes the air conditioners made by Toshiba Carrier Corporation. He or she has been trained to install, repair, maintain, relocate and remove the air conditioners made by Toshiba Carrier Corporation or, alternatively, he or she has been instructed in such operations by an individual or individuals who have been trained and is thus thoroughly acquainted with the knowledge related to these operations. • The qualified service person who is allowed to do the electrical work involved in installation, repair, relocation and removal has the qualifications pertaining to this electrical work as stipulated by the local laws and regulations, and he or she is a person who has been trained in matters relating to electrical work on the air conditioners made by Toshiba Carrier Corporation or, alternatively, he or she has been instructed in such matters by an individual or individuals who have been trained and is thus thoroughly acquainted with the knowledge related to this work. • The qualified service person who is allowed to do the refrigerant handling and piping work involved in installation, repair, relocation and removal has the qualifications pertaining to this refrigerant handling and piping work as stipulated by the local laws and regulations, and he or she is a person who has been trained in matters relating to refrigerant handling and piping work on the air conditioners made by Toshiba Carrier Corporation or, alternatively, he or she has been instructed in such matters by an individual or individuals who have been trained and is thus thoroughly acquainted with the knowledge related to this work. • The qualified service person who is allowed to work at heights has been trained in matters relating to working at heights with the air conditioners made by Toshiba Carrier Corporation or, alternatively, he or she has been instructed in such matters by an individual or individuals who have been trained and is thus thoroughly acquainted with the knowledge related to this work.

Definition of Protective Gear

When the air conditioner is to be transported, installed, maintained, repaired or removed, wear protective gloves and 'safety' work clothing.
In addition to such normal protective gear, wear the protective gear described below when undertaking the special work detailed in the table below.
Failure to wear the proper protective gear is dangerous because you will be more susceptible to injury, burns, electric shocks and other injuries.

Work undertaken	Protective gear to wear
All types of work	Protective gloves 'Safety' working clothing
Electrical-related work	Gloves to provide protection for electricians and from heat Insulating shoes Clothing to provide protection from electric shock
Work at heights (50 cm or more)	Helmets for use in industry
Transportation of heavy objects	Shoes with additional protective toe cap
Repair of outdoor unit	Gloves to provide protection for electricians and from heat

The important contents concerned to the safety are described on the product itself and on this Service Manual.

Please read this Service Manual after understanding the described items thoroughly in the following contents (Indications / Illustrated marks), and keep them.

[Explanation of indications]

Indication	Explanation
⚠ DANGER	Indicates contents assumed that an imminent danger causing a death or serious injury of the repair engineers and the third parties when an incorrect work has been executed.
⚠ WARNING	Indicates possibilities assumed that a danger causing a death or serious injury of the repair engineers, the third parties, and the users due to troubles of the product after work when an incorrect work has been executed.
⚠ CAUTION	Indicates contents assumed that an injury or property damage (*) may be caused on the repair engineers, the third parties, and the users due to troubles of the product after work when an incorrect work has been executed.

* Property damage: Enlarged damage concerned to property, furniture, and domestic animal / pet

[Explanation of illustrated marks]

Indication	Explanation
⃠	Indicates prohibited items (Forbidden items to do) The sentences near an illustrated mark describe the concrete prohibited contents.
●	Indicates mandatory items (Compulsory items to do) The sentences near an illustrated mark describe the concrete mandatory contents.
△	Indicates cautions (Including danger / warning) The sentences or illustration near or in an illustrated mark describe the concrete cautious contents.

Warning Indications on the Air Conditioner Unit

[Confirmation of warning label on the main unit]

Confirm that labels are indicated on the specified positions
If removing the label during parts replace, stick it as the original.

Warning indication	Description
WARNING **ELECTRICAL SHOCK HAZARD** Disconnect all remote electric power supplies before servicing.	**WARNING** **ELECTRICAL SHOCK HAZARD** Disconnect all remote electric power supplies before servicing.
WARNING Moving parts. Do not operate unit with grille removed. Stop the unit before the servicing.	**WARNING** Moving parts. Do not operate unit with grille removed. Stop the unit before the servicing.
CAUTION High temperature parts. You might get burned when removing this panel.	**CAUTION** High temperature parts. You might get burned when removing this panel.
CAUTION Do not touch the aluminium fins of the unit. Doing so may result in injury.	**CAUTION** Do not touch the aluminium fins of the unit. Doing so may result in injury.
CAUTION **BURST HAZARD** Open the service valves before the operation, otherwise there might be the burst.	**CAUTION** **BURST HAZARD** Open the service valves before the operation, otherwise there might be the burst.
CAUTION **Do not climb onto the fan guard.** Doing so may result in injury.	**CAUTION** **Do not climb onto the fan guard.** Doing so may result in injury.

PRECAUTIONS FOR SAFETY

The manufacturer shall not assume any liability for the damage caused by not observing the description of this manual.

⚠ DANGER

Turn off breaker	Before carrying out the installation, maintenance, repair or removal work, be sure to set the circuit breaker for both the indoor and outdoor units to the OFF position. Otherwise, electric shocks may result.
	Before opening the intake grille of the indoor unit or service panel of the outdoor unit, set the circuit breaker to the OFF position. Failure to set the circuit breaker to the OFF position may result in electric shocks through contact with the interior parts. Only a qualified installer (*1) or qualified service person (*1) is allowed to remove the intake grille of the indoor unit or service panel of the outdoor unit and do the work required.
	Before starting to repair the outdoor unit fan or fan guard, be absolutely sure to set the circuit breaker to the OFF position, and place a “Work in progress” sign on the circuit breaker.
	When cleaning the filter or other parts of the indoor unit, set the circuit breaker to OFF without fail, and place a “Work in progress” sign near the circuit breaker before proceeding with the work.
	When you have noticed that some kind of trouble (such as when an error display has appeared, there is a smell of burning, abnormal sounds are heard, the air conditioner fails to cool or heat or water is leaking) has occurred in the air conditioner, do not touch the air conditioner yourself but set the circuit breaker to the OFF position, and contact a qualified service person. Take steps to ensure that the power will not be turned on (by marking “out of service” near the circuit breaker, for instance) until qualified service person arrives. Continuing to use the air conditioner in the trouble status may cause mechanical problems to escalate or result in electric shocks or other failure.
Electric shock hazard	When you access inside of the service panel to repair electric parts, wait for about five minutes after turning off the breaker. Do not start repairing immediately.Otherwise you may get electric shock by touching terminals of high-voltage capacitors. Natural discharge of the capacitor takes about five minutes.
Prohibition	Place a “Work in progress” sign near the circuit breaker while the installation, maintenance, repair or removal work is being carried out. There is a danger of electric shocks if the circuit breaker is set to ON by mistake.
	Before operating the air conditioner after having completed the work, check that the electrical parts box cover of the indoor unit and service panel of the outdoor unit are closed, and set the circuit breaker to the ON position. You may receive an electric shock if the power is turned on without first conducting these checks.
Stay on protection	If, in the course of carrying out repairs, it becomes absolutely necessary to check out the electrical parts with the electrical parts box cover of one or more of the indoor units and the service panel of the outdoor unit removed in order to find out exactly where the trouble lies, wear insulated heat-resistant gloves, insulated boots and insulated work overalls, and take care to avoid touching any live parts. You may receive an electric shock if you fail to heed this warning. Only qualified service person (*1) is allowed to do this kind of work.

⚠ WARNING

General	Before starting to repair the air conditioner, read carefully through the Service Manual, and repair the air conditioner by following its instructions.
	Only qualified service person (*1) is allowed to repair the air conditioner. Repair of the air conditioner by unqualified person may give rise to a fire, electric shocks, injury, water leaks and / or other problems.
	Do not use any refrigerant different from the one specified for complement or replacement. Otherwise, abnormally high pressure may be generated in the refrigeration cycle, which may result in a failure or explosion of the product or an injury to your body.
	Only a qualified installer (*1) or qualified service person (*1) is allowed to carry out the electrical work of the air conditioner. Under no circumstances must this work be done by an unqualified individual since failure to carry out the work properly may result in electric shocks and / or electrical leaks.
	When transporting the air conditioner, wear shoes with protective toe caps, protective gloves and other protective clothing.
	Wear protective gloves and safety work clothing during installation, servicing and removal.
	When connecting the electrical wires, repairing the electrical parts or undertaking other electrical jobs, wear gloves to provide protection for electricians and from heat, insulating shoes and clothing to provide protection from electric shocks. Failure to wear this protective gear may result in electric shocks.
	Electrical wiring work shall be conducted according to law and regulation in the community and installation manual. Failure to do so may result in electrocution or short circuit.
	Only a qualified installer (*1) or qualified service person (*1) is allowed to undertake work at heights using a stand of 50 cm or more or to remove the intake grille of the indoor unit to undertake work.
	When working at heights, use a ladder which complies with the ISO 14122 standard, and follow the procedure in the ladder's instructions. Also wear a helmet for use in industry as protective gear to undertake the work.
	When working at heights, put a sign in place so that no-one will approach the work location, before proceeding with the work. Parts and other objects may fall from above, possibly injuring a person below.
	When executing address setting, test run, or troubleshooting through the checking window on the electric parts box, put on insulated gloves to provide protection from electric shock. Otherwise you may receive an electric shock.
	Do not touch the aluminum fin of the outdoor unit. You may injure yourself if you do so. If the fin must be touched for some reason, first put on protective gloves and safety work clothing, and then proceed.
	Do not climb onto or place objects on top of the outdoor unit. You may fall or the objects may fall off of the outdoor unit and result in injury.
	When transporting the air conditioner, wear shoes with additional protective toe caps.
	When transporting the air conditioner, do not take hold of the bands around the packing carton. You may injure yourself if the bands should break.
	Be sure that a heavy unit (10 kg or heavier) such as a compressor is carried by two persons.
	This air conditioner has passed the pressure test as specified in IEC 60335-2-40 Annex EE.
Check earth wires.	Before troubleshooting or repair work, check the earth wire is connected to the earth terminals of the main unit, otherwise an electric shock is caused when a leak occurs. If the earth wire is not correctly connected, contact an electric engineer for rework.
	After completing the repair or relocation work, check that the ground wires are connected properly.
	Be sure to connect earth wire. (Grounding work) Incomplete grounding causes an electric shock. Do not connect ground wires to gas pipes, water pipes, and lightning rods or ground wires for telephone wires.
Prohibition of modification.	Do not modify the products. Do not also disassemble or modify the parts. It may cause a fire, electric shock or injury.
Use specified parts.	When any of the electrical parts are to be replaced, ensure that the replacement parts satisfy the specifications given in the Service Manual (or use the parts contained on the parts list in the Service Manual). Use of any parts which do not satisfy the required specifications may give rise to electric shocks, smoking and / or a fire.

Do not bring a child close to the equipment.	If, in the course of carrying out repairs, it becomes absolutely necessary to check out the electrical parts with the electrical parts box cover of one or more of the indoor units and the service panel of the outdoor unit removed in order to find out exactly where the trouble lies, put a sign in place so that no-one will approach the work location before proceeding with the work. Third-party individuals may enter the work site and receive electric shocks if this warning is not heeded.
Insulating measures	Connect the cut-off lead wires with crimp contact, etc., put the closed end side upward and then apply a watercut method, otherwise a leak or production of fire is caused at the users' side.
No fire	When performing repairs using a gas burner, replace the refrigerant with nitrogen gas because the oil that coats the pipes may otherwise burn. When repairing the refrigerating cycle, take the following measures. 1) Be attentive to fire around the cycle. When using a gas stove, etc., be sure to put out fire before work; otherwise the oil mixed with refrigerant gas may catch fire. 2) Do not use a welder in the closed room. When using it without ventilation, carbon monoxide poisoning may be caused. 3) Do not bring inflammables close to the refrigerant cycle, otherwise fire of the welder may catch the inflammables.
Refrigerant	The refrigerant used by this air conditioner is the R410A.
	Check the used refrigerant name and use tools and materials of the parts which match with it. For the products which use R410A refrigerant, the refrigerant name is indicated at a position on the outdoor unit where is easy to see. To prevent miss-charging, the route of the service port is changed from one of the former R22.
	For an air conditioner which uses R410A, never use other refrigerant than R410A. For an air conditioner which uses other refrigerant (R22, etc.), never use R410A. If different types of refrigerant are mixed, abnormal high pressure generates in the refrigerating cycle and an injury due to breakage may be caused.
	When the air conditioner has been installed or relocated, follow the instructions in the Installation Manual and purge the air completely so that no gases other than the refrigerant will be mixed in the refrigerating cycle. Failure to purge the air completely may cause the air conditioner to malfunction.
	Do not charge refrigerant additionally. If charging refrigerant additionally when refrigerant gas leaks, the refrigerant composition in the refrigerating cycle changes resulted in change of air conditioner characteristics or refrigerant over the specified standard amount is charged and an abnormal high pressure is applied to the inside of the refrigerating cycle resulted in cause of breakage or injury. Therefore if the refrigerant gas leaks, recover the refrigerant in the air conditioner, execute vacuuming, and then newly recharge the specified amount of liquid refrigerant. In this time, never charge the refrigerant over the specified amount.
	When recharging the refrigerant in the refrigerating cycle, do not mix the refrigerant or air other than R410A into the specified refrigerant. If air or others is mixed with the refrigerant, abnormal high pressure generates in the refrigerating cycle resulted in cause of injury due to breakage.
	Install the refrigerant pipe securely during the installation work before operating the air conditioner. If the compressor is operated with the valve open and without refrigerant pipe, the compressor sucks air and the refrigeration cycles is over pressurized, which may cause injury.
	After the installation work, confirm that refrigerant gas does not leak. If refrigerant gas leaks into the room and flows near a fire source, such as a cooking range, noxious gas may be generated.
	Never recover the refrigerant into the outdoor unit. When the equipment is moved or repaired, be sure to recover the refrigerant with recovering device. The refrigerant cannot be recovered in the outdoor unit; otherwise a serious accident such as breakage or injury is caused.
Assembly / Wiring	After repair work, surely assemble the disassembled parts, and connect and lead the removed wires as before. Perform the work so that the cabinet or panel does not catch the inner wires. If incorrect assembly or incorrect wire connection was done, a disaster such as a leak or fire is caused at user's side.
Insulator check	After the work has finished, be sure to use an insulation tester set (500 V Megger) to check the resistance is 1 MΩ or more between the charge section and the non-charge metal section (Earth position). If the resistance value is low, a disaster such as a leak or electric shock is caused at user's side.

Ventilation	When the refrigerant gas leaks during work, execute ventilation. If the refrigerant gas touches to a fire, poisonous gas generates. A case of leakage of the refrigerant and the closed room full with gas is dangerous because a shortage of oxygen occurs. Be sure to execute ventilation.
Compulsion	When the refrigerant gas leaks, find up the leaked position and repair it surely. If the leaked position cannot be found up and the repair work is interrupted, pump-down and tighten the service valve, otherwise the refrigerant gas may leak into the room. The poisonous gas generates when gas touches to fire such as fan heater, stove or cocking stove though the refrigerant gas itself is innocuous. When installing equipment which includes a large amount of charged refrigerant such as a multi air conditioner in a sub-room, it is necessary that the density does not the limit even if the refrigerant leaks. If the refrigerant leaks and exceeds the limit density, an accident of shortage of oxygen is caused.
	Tighten the flare nut with a torque wrench in the specified manner. Excessive tighten of the flare nut may cause a crack in the flare nut after a long period, which may result in refrigerant leakage.
	Nitrogen gas must be used for the airtight test.
	The charge hose must be connected in such a way that it is not slack.
	For the installation / moving / reinstallation work, follow to the Installation Manual. If an incorrect installation is done, a trouble of the refrigerating cycle, water leak, electric shock or fire is caused.
Check after repair	Once the repair work has been completed, check for refrigerant leaks, and check the insulation resistance and water drainage. Then perform a trial run to check that the air conditioner is running properly.
	After repair work has finished, check there is no trouble. If check is not executed, a fire, electric shock or injury may be caused. For a check, turn off the power breaker.
	After repair work (installation of front panel and cabinet) has finished, execute a test run to check there is no generation of smoke or abnormal sound. If check is not executed, a fire or an electric shock is caused. Before test run, install the front panel and cabinet.
	Be sure to fix the screws back which have been removed for installation or other purposes.
Do not operate the unit with the valve closed.	Check the following matters before a test run after repairing piping. • Connect the pipes surely and there is no leak of refrigerant. • The valve is opened. Running the compressor under condition that the valve closes causes an abnormal high pressure resulted in damage of the parts of the compressor and etc. and moreover if there is leak of refrigerant at connecting section of pipes, the air is sucked and causes further abnormal high pressure resulted in burst or injury.
Check after reinstallation	Only a qualified installer (*1) or qualified service person (*1) is allowed to relocate the air conditioner. It is dangerous for the air conditioner to be relocated by an unqualified individual since a fire, electric shocks, injury, water leakage, noise and / or vibration may result.
	Check the following items after reinstallation. 1) The earth wire is correctly connected. 2) The power cord is not caught in the product. 3) There is no inclination or unsteadiness and the installation is stable. If check is not executed, a fire, an electric shock or an injury is caused.
	When carrying out the pump-down work shut down the compressor before disconnecting the refrigerant pipe. Disconnecting the refrigerant pipe with the service valve left open and the compressor still operating will cause air or other gas to be sucked in, raising the pressure inside the refrigeration cycle to an abnormally high level, and possibly resulting in rupture, injury or other trouble.
Cooling check	When the service panel of the outdoor unit is to be opened in order for the compressor or the area around this part to be repaired immediately after the air conditioner has been shut down, set the circuit breaker to the OFF position, and then wait at least 10 minutes before opening the service panel. If you fail to heed this warning, you will run the risk of burning yourself because the compressor pipes and other parts will be very hot to the touch. In addition, before proceeding with the repair work, wear the kind of insulated heat-resistant gloves designed to protect electricians.
	Take care not to get burned by compressor pipes or other parts when checking the cooling cycle while running the unit as they get heated while running. Be sure to put on gloves providing protection for electric shock and heat.
	When the service panel of the outdoor unit is to be opened in order for the fan motor, reactor, inverter or the areas around these parts to be repaired immediately after the air conditioner has been shut down, set the circuit breaker to the OFF position, and then wait at least 10 minutes before opening the service panel. If you fail to heed this warning, you will run the risk of burning yourself because the fan motor, reactor, inverter heat sink and other parts will be very hot to the touch. In addition, before proceeding with the repair work, wear the kind of insulated heat-resistant gloves designed to protect electricians.

Installation	Only a qualified installer (*1) or qualified service person (*1) is allowed to install the air conditioner. If the air conditioner is installed by an unqualified individual, a fire, electric shocks, injury, water leakage, noise and/or vibration may result.
	Before starting to install the air conditioner, read carefully through the Installation Manual, and follow its instructions to install the air conditioner.
	Be sure to use the company-specified products for the separately purchased parts. Use of non-specified products may result in fire, electric shock, water leakage or other failure. Have the installation performed by a qualified installer.
	Use wiring that meets the specifications in the Installation Manual and the stipulations in the local regulations and laws. Use of wiring which does not meet the specifications may give rise to electric shocks, electrical leakage, smoking and/or a fire.
	Do not supply power from the power terminal block equipped on the outdoor unit to another outdoor unit. Capacity overflow may occur on the terminal block and may result in fire.
	Do not install the air conditioner in a location that may be subject to a risk of expire to a combustible gas. If a combustible gas leaks and becomes concentrated around the unit, a fire may occur.
	If refrigerant gas has leaked during the installation work, ventilate the room immediately. If the leaked refrigerant gas comes in contact with fire, noxious gas may be generated.
	Install a circuit breaker that meets the specifications in the installation manual and the stipulations in the local regulations and laws.
	Install the circuit breaker where it can be easily accessed by the qualified service person (*1).
	If you install the unit in a small room, take appropriate measures to prevent the refrigerant from exceeding the limit concentration even if it leaks. Consult the dealer from whom you purchased the air conditioner when you implement the measures. Accumulation of highly concentrated refrigerant may cause an oxygen deficiency accident.
	Do not place any combustion appliance in a place where it is directly exposed to the wind of air conditioner, otherwise it may cause imperfect combustion.

Explanations given to user

If you have discovered that the fan grille is damaged, do not approach the outdoor unit but set the circuit breaker to the OFF position, and contact a qualified service person to have the repairs done.
Do not set the circuit breaker to the ON position until the repairs are completed.

Relocation

- Only a qualified installer (*1) or qualified service person (*1) is allowed to relocate the air conditioner.
  It is dangerous for the air conditioner to be relocated by an unqualified individual since a fire, electric shocks, injury, water leakage, noise and / or vibration may result.
- When carrying out the pump-down work shut down the compressor before disconnecting the refrigerant pipe.
  Disconnecting the refrigerant pipe with the service valve left open and the compressor still operating will cause air, etc. to be sucked in, raising the pressure inside the refrigeration cycle to an abnormally high level, and possibly resulting in reputing, injury, etc.

(*1) Refer to the “Definition of Qualified Installer or Qualified Service Person”

Declaration of Conformity

Manufacturer: TOSHIBA CARRIER (THAILAND) CO., LTD.
144 / 9 Moo 5, Bangkadi Industrial Park, Tivanon Road,
Amphur Muang, Pathumthani 12000, Thailand

Authorized Representative / Nick Ball

TCF holder: Toshiba EMEA Engineering Director
Toshiba Carrier UK Ltd.
Porsham Close, Belliver Industrial Estate,
PLYMOUTH, Devon, PL6 7DB.
United Kingdom

Hereby declares that the machinery described below:

Generic Denomination: Air Conditioner

Model / type: Outdoor unit

<Heat Pump Model>
MMY-MAP0806HT8(J)P-E,
MMY-MAP1006HT8(J)P-E,
MMY-MAP1206HT8(J)P-E,
MMY-MAP1406HT8(J)P-E,
MMY-MAP1606HT8(J)P-E,
MMY-MAP1806HT8(J)P-E,
MMY-MAP2006HT8(J)P-E,
MMY-MAP2206HT8(J)P-E

MMY-MAP0806HT8(J)P-TR,
MMY-MAP1006HT8(J)P-TR,
MMY-MAP1206HT8(J)P-TR,
MMY-MAP1406HT8(J)P-TR,
MMY-MAP1606HT8(J)P-TR,
MMY-MAP1806HT8(J)P-TR,
MMY-MAP2006HT8(J)P-TR,
MMY-MAP2206HT8(J)P-TR

<Cooling Only Model>
MMY-MAP0806T8(J)P-E,
MMY-MAP1006T8(J)P-E,
MMY-MAP1206T8(J)P-E,
MMY-MAP1406T8(J)P-E,
MMY-MAP1606T8(J)P-E,
MMY-MAP1806T8(J)P-E,
MMY-MAP2006T8(J)P-E,
MMY-MAP2206T8(J)P-E

Commercial name: Super Modular Multi System Air Conditioner

Complies with the provisions of the “Machinery” Directive (Directive 2006/42/EC) and the regulations transposing into national law

Complies with the provisions of the following harmonized standard:
EN 378-2: 2008+A2:2012

NOTE

This declaration becomes invalid if technical or operational modifications are introduced without the manufacturer’s consent.

Specifications

Model	Sound power level (dBA)		Weight (kg)
	Cooling	Heating	
MMY-MAP0806HT8(J)P	74	74	242
MMY-MAP0806HT7(J)P			
MMY-MAP0806HT8(J)PME			
MMY-MAP0806HT7P-ME			
MMY-MAP0806HT8P-A			
MMY-MAP1006HT8(J)P	74	74	242
MMY-MAP1006HT7(J)P			
MMY-MAP1006HT8(J)PME			
MMY-MAP1006HT7P-ME			
MMY-MAP1006HT8P-A			
MMY-MAP1206HT8(J)P	80	82	242
MMY-MAP1206HT7(J)P			
MMY-MAP1206HT8(J)PME			
MMY-MAP1206HT7P-ME			
MMY-MAP1206HT8P-A			
MMY-MAP1406HT8(J)P	80	82	299
MMY-MAP1406HT7(J)P			
MMY-MAP1406HT8(J)PME			
MMY-MAP1406HT7P-ME			
MMY-MAP1406HT8P-A			
MMY-MAP1606HT8(J)P	81	83	299
MMY-MAP1606HT7(J)P			
MMY-MAP1606HT8(J)PME			
MMY-MAP1606HT7P-ME			
MMY-MAP1606HT8P-A			
MMY-MAP1606HT8P-C			
MMY-MAP1806HT8(J)P	81	83	370
MMY-MAP1806HT7(J)P			
MMY-MAP1806HT8(J)PME			
MMY-MAP1806HT7P-ME			
MMY-MAP1806HT8P-A			
MMY-MAP1806HT8P-C			
MMY-MAP2006HT8(J)P	82	84	370
MMY-MAP2006HT7(J)P			
MMY-MAP2006HT8(J)PME			
MMY-MAP2006HT7P-ME			
MMY-MAP2006HT8P-A			
MMY-MAP2006HT8P-C			
MMY-MAP2206HT8(J)P	83	84	370
MMY-MAP2206HT7(J)P			
MMY-MAP2206HT8P-C			

Specifications

Model	Sound power level (dBA)		Weight (kg)
	Cooling	Heating	
MMY-MAP0806HT8(J)P-E	74	74	242
MMY-MAP0806HT8(J)P-TR			
MMY-MAP0806T8(J)P-E		-	241
MMY-MAP1006HT8(J)P-E	74	74	242
MMY-MAP1006HT8(J)P-TR			
MMY-MAP1006T8(J)P-E		-	241
MMY-MAP1206HT8(J)P-E	80	82	242
MMY-MAP1206HT8(J)P-TR			
MMY-MAP1206T8(J)P-E		-	241
MMY-MAP1406HT8(J)P-E	80	82	300
MMY-MAP1406HT8(J)P-TR			
MMY-MAP1406T8(J)P-E		-	299
MMY-MAP1606HT8(J)P-E	81	83	300
MMY-MAP1606HT8(J)P-TR			
MMY-MAP1606T8(J)P-E		-	299
MMY-MAP1806HT8(J)P-E	81	83	371
MMY-MAP1806HT8(J)P-TR			
MMY-MAP1806T8(J)P-E		-	370
MMY-MAP2006HT8(J)P-E	82	84	371
MMY-MAP2006HT8(J)P-TR			
MMY-MAP2006T8(J)P-E		-	370
MMY-MAP2206HT8(J)P-E	83	84	371
MMY-MAP2206HT8(J)P-TR			
MMY-MAP2206T8(J)P-E		-	370

Specifications

Model	Sound power level (dBA)	Weight (kg)
MMY-MAP0806T8(J)P	74	240
MMY-MAP0806T7(J)P		
MMY-MAP0806T8P-SG		
MMY-MAP0806T8(J)P-ID		
MMY-MAP0806T8(J)P-T		
MMY-MAP1006T8(J)P	74	240
MMY-MAP1006T7(J)P		
MMY-MAP1006T8P-SG		
MMY-MAP1006T8(J)P-ID		
MMY-MAP1006T8(J)P-T		
MMY-MAP1206T8(J)P	80	240
MMY-MAP1206T7(J)P		
MMY-MAP1206T8P-SG		
MMY-MAP1206T8(J)P-ID		
MMY-MAP1206T8(J)P-T		
MMY-MAP14B6T8(J)P	80	240
MMY-MAP14B6T7(J)P		
MMY-MAP14B6T8P-SG		
MMY-MAP14B6T8(J)P-ID		
MMY-MAP14B6T8(J)P-T		
MMY-MAP1406T8(J)P	80	298
MMY-MAP1406T7(J)P		
MMY-MAP1406T8P-SG		
MMY-MAP1406T8(J)P-ID		
MMY-MAP1406T8(J)P-T		
MMY-MAP1606T8(J)P	81	298
MMY-MAP1606T7(J)P		
MMY-MAP1606T8P-SG		
MMY-MAP1606T8(J)P-ID		
MMY-MAP1606T8(J)P-T		
MMY-MAP18B6T8(J)P	81	298
MMY-MAP18B6T7(J)P		
MMY-MAP18B6T8P-SG		
MMY-MAP18B6T8(J)P-ID		
MMY-MAP18B6T8(J)P-T		
MMY-MAP1806T8(J)P	81	369
MMY-MAP1806T7(J)P		
MMY-MAP1806T8P-SG		
MMY-MAP1806T8(J)P-ID		
MMY-MAP1806T8(J)P-T		
MMY-MAP2006T8(J)P	82	369
MMY-MAP2006T7(J)P		
MMY-MAP2006T8P-SG		
MMY-MAP2006T8(J)P-ID		
MMY-MAP2006T8(J)P-T		
MMY-MAP2206T8(J)P	83	369
MMY-MAP2206T7(J)P		
MMY-MAP2206T8P-SG		
MMY-MAP2206T8(J)P-ID		
MMY-MAP2206T8(J)P-T		

CARRYING IN THE OUTDOOR UNIT

⚠ CAUTION

Handle the outdoor unit carefully, observing the following items.

- When using a forklift or other machinery for loading/unloading in transportation, insert the fork of the forklift into the rectangular holes for handling as shown below.
- When lifting up the unit, insert a rope able to bear the unit's weight into the rectangular holes for handling, and tie the unit from 4 sides.
  (Apply padding in positions where the rope comes into contact with the outdoor unit so that no damage is caused to the outer surface of the outdoor unit.)
  (There are reinforcing plates on the side surfaces, so the rope cannot be passed through.)

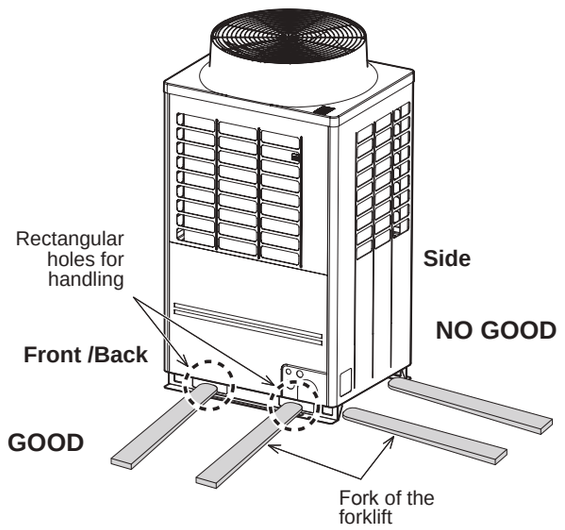

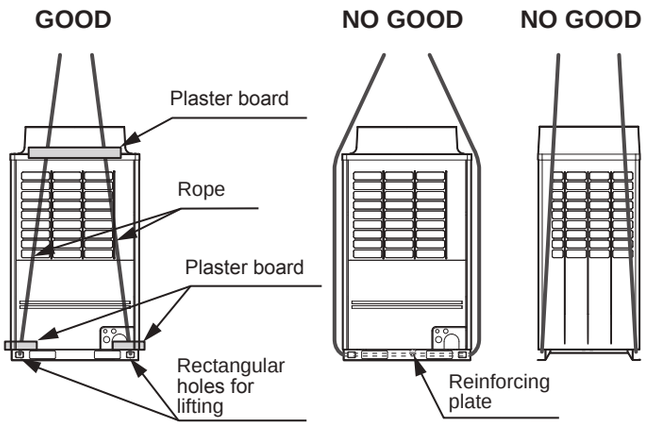

■ Weight centre

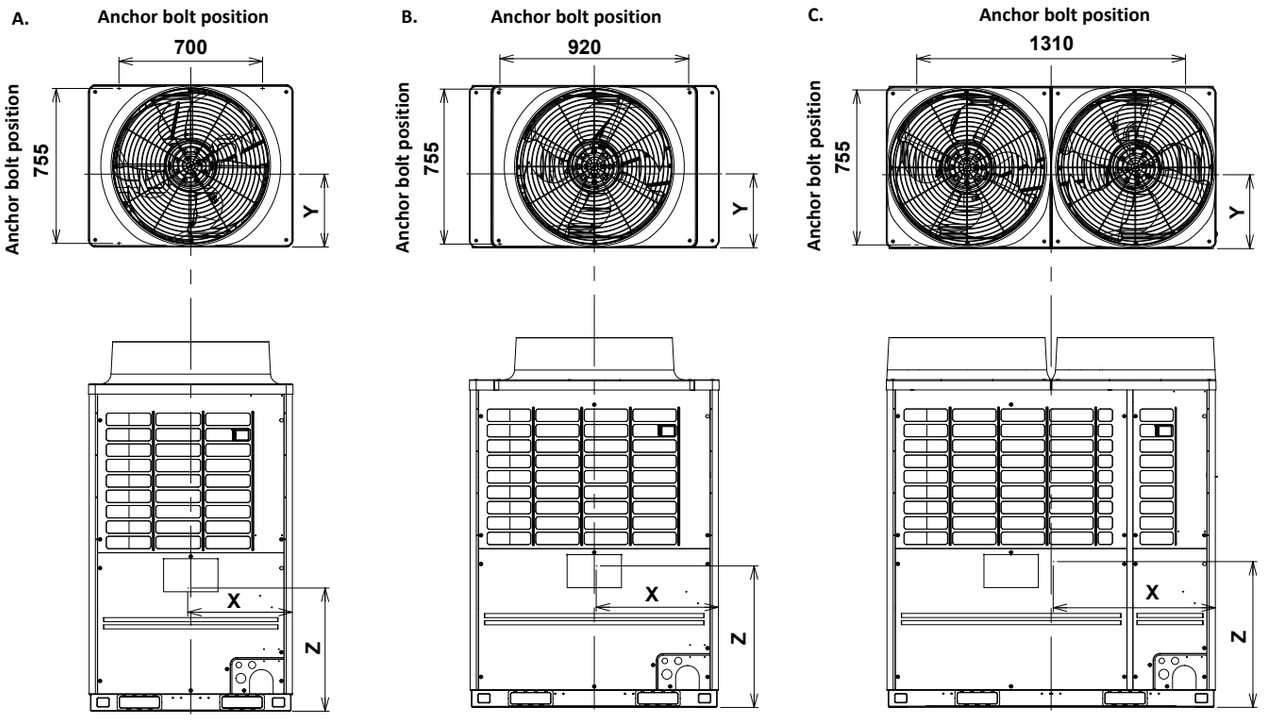

(Unit : mm)

No.	Model type	X (mm)	Y (mm)	Z (mm)
A	MMY-MAP0806(H)T∗(J)P∗	510	355	600
	MMY-MAP1006(H)T∗(J)P∗			
	MMY-MAP1206(H)T∗(J)P∗			
	MMY-MAP14B6T∗(J)P∗			
B	MMY-MAP1406(H)T∗(J)P∗	595	360	690
	MMY-MAP1606(H)T∗(J)P∗			
	MMY-MAP18B6T∗(J)P∗			
C	MMY-MAP1806(H)T∗(J)P∗	790	360	710
	MMY-MAP2006(H)T∗(J)P∗			
	MMY-MAP2206(H)T∗(J)P∗			

SELECTION OF PIPE SIZE

Coupling size of brazed pipe

Connected section	
External size	Internal size
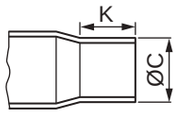	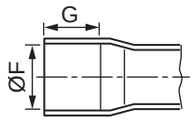

(Unit: mm)

Standard outer dia. of connected copper pipe	Connected section					Min. thickness of coupling
	External size	Internal size	Min. depth of insertion		Oval value	
	Standard outer dia. (Allowable difference)					
	C	F	K	G		
6.35	6.35 (±0.03)	6.45 ($^{+0.04}_{-0.02}$)	7	6	0.06 or less	0.50
9.52	9.52 (±0.03)	9.62 ($^{+0.04}_{-0.02}$)	8	7	0.08 or less	0.60
12.70	12.70 (±0.03)	12.81 ($^{+0.04}_{-0.02}$)	9	8	0.10 or less	0.70
15.88	15.88 (±0.03)	16.00 ($^{+0.04}_{-0.02}$)	9	8	0.13 or less	0.80
19.05	19.05 (±0.03)	19.19 ($^{+0.03}_{-0.03}$)	11	10	0.15 or less	0.80
22.22	22.22 (±0.03)	22.36 ($^{+0.03}_{-0.03}$)	11	10	0.16 or less	0.82
28.58	28.58 (±0.04)	28.75 ($^{+0.06}_{-0.02}$)	13	12	0.20 or less	1.00
34.92	34.90 (±0.04)	35.11 ($^{+0.04}_{-0.04}$)	14	13	0.25 or less	1.20
38.10	38.10 (±0.05)	38.31 ($^{+0.08}_{-0.02}$)	15	14	0.27 or less	1.26
41.28	41.28 (±0.05)	41.50 ($^{+0.08}_{-0.02}$)	15	14	0.28 or less	1.35

■ Screw size and tightening torque

	Screw size	Tightening torque (N•m)
Power supply terminal	M6	2.5 to 3.0
Earth screw	M8	5.5 to 6.6
Communication wire terminal	M4	1.2 to 1.4

■ Adding refrigerant

After finishing vacuuming, exchange the vacuum pump with a refrigerant canister and start additional charging of refrigerant.

Calculation of additional refrigerant charge amount

Refrigerant charge amount at shipment from the factory does not include the refrigerant for pipes at the local site. For refrigerant to be charged in pipes at the local site, calculate the amount and charge it additionally.

NOTE

If the additional refrigerant amount indicates minus as the result of calculation, use the air conditioner without additional refrigerant.

Outdoor unit type	MAP080	MAP100	MAP120	MAP140	MAP160	MAP180	MAP200	MAP220
Charged amount (kg)	11.5							

Cooling only model

Outdoor unit type	MAP080	MAP100	MAP120	MAP14B	MAP140	MAP160	MAP18B	MAP180	MAP200	MAP220
Charged amount (kg)	10.5				11.5					

Additional refrigerant charge amount at site = [1] + [2] +
[3] [1]. Compensation by system HP (Table 1-1~1-6)
[2]. Additional refrigerant charge amount Indoor unit (Table 2)
[3]. (Real length of liquid pipe × Additional refrigerant charge amount per liquid pipe 1 m (Table 3)) × 1.2

Table 1-1; For HT8P, HT7P model

	System	Combination			Charged refrigerant	Compensation by System HP
	HP	HP			kg	kg
Standard model	8	8	-	-	11.5	-3.5
	10	10	-	-	11.5	-3.5
	12	12	-	-	11.5	-1.5
	14	14	-	-	11.5	-1.0
	16	16	-	-	11.5	-0.5
	18	18	-	-	11.5	1.5
	20	20	-	-	11.5	1.5
	22	22	-	-	11.5	1.5
	24	12	12	-	23	-3.0
	26	14	12	-	23	-2.5
	28	16	12	-	23	-2.0
	30	16	14	-	23	-1.5
	32	16	16	-	23	-1.0
	34	18	16	-	23	1.0
	36	20	16	-	23	1.0
	38	22	16	-	23	1.0
	40	20	20	-	23	3.0
	42	22	20	-	23	3.0
	44	22	22	-	23	3.0
	46	16	16	14	34.5	-6.5
	48	16	16	16	34.5	-6.5
	50	18	16	16	34.5	-0.5
	52	20	16	16	34.5	-0.5
	54	22	16	16	34.5	-0.5
	56	20	20	16	34.5	2.5
	58	22	20	16	34.5	2.5
	60	22	22	16	34.5	2.5
High efficiency model	20	10	10	-	23	-7.0
	22	12	10	-	23	-7.0
	36	12	12	12	34.5	-12.5
	38	14	12	12	34.5	-10.5
	40	14	14	12	34.5	-8.5
	42	14	14	14	34.5	-4.5
	44	16	14	14	34.5	-4.5
	54	20	20	14	34.5	1.5

Table1-2-1 ; For HT8P-ME, HT7P-ME model (Standard)

	System	Combination			Charged refrigerant	Compesation by System HP
	HP	HP			kg	kg
Standard model	8	8			11.5	-3.5
	10	10			11.5	-3.5
	12	12			11.5	-1.5
	14	14			11.5	-1.0
	16	16			11.5	-0.5
	18	18			11.5	1.5
	20	20			11.5	1.5
	22	12	10		23	-7.0
	24	12	12		23	-3.0
	26	14	12		23	-2.5
	28	14	14		23	-3.0
	30	16	14		23	-1.5
	32	16	16		23	-1.0
	34	18	16		23	1.0
	36	18	18		23	3.0
	38	20	18		23	3.0
	40	20	20		23	3.0
	42	14	14	14	34.5	-4.5
	44	16	14	14	34.5	-4.5
	46	16	16	14	34.5	-6.5
	48	16	16	16	34.5	-6.5
	50	18	16	16	34.5	-0.5
	52	18	18	16	34.5	1.5
	54	20	20	14	34.5	1.5
	56	20	20	16	34.5	2.5

Table 1-2-2 ; For HT8P-ME, HT7P-ME model (High efficiency)

	System	Combination			Charged refrigerant	Compesation by
	HP	HP			kg	kg
High efficiency model	16	8	8	—	23	-7.0
	18	10	8	—	23	-7.0
	20	10	10	—	23	-7.0
	30	10	10	10	34.5	-10.5
	32	12	10	10	34.5	-10.5
	34	12	12	10	34.5	-10.5
	38	14	12	12	34.5	-10.5
	40	14	14	12	34.5	-8.5

Table1-3 ; For HT8P-E, T8P-E, HT8P-TR model

	System	Combination			Charged refrigerant (kg)		Compensation by System HP
	HP	HP			Heat pump type	Cooling only type	kg
Standard model	8	8	–	–	11.5	10.5	-3.5
	10	10	–	–	11.5	10.5	-3.5
	12	12	–	–	11.5	10.5	-1.5
	14	14	–	–	11.5	11.5	-1.0
	16	16	–	–	11.5	11.5	-0.5
	18	18	–	–	11.5	11.5	1.5
	20	20	–	–	11.5	11.5	1.5
	22	22	–	–	11.5	11.5	1.5
	24	12	12	–	23	21	-3.0
	26	14	12	–	23	22	-2.5
	28	16	12	–	23	22	-2.0
	30	16	14	–	23	23	-1.5
	32	16	16	–	23	23	-1.0
	34	18	16	–	23	23	1.0
	36	20	16	–	23	23	1.0
	38	22	16	–	23	23	1.0
	40	20	20	–	23	23	3.0
	42	22	20	–	23	23	3.0
	44	22	22	–	23	23	3.0
	46	16	16	14	34.5	34.5	-6.5
	48	16	16	16	34.5	34.5	-6.5
	50	18	16	16	34.5	34.5	-0.5
	52	20	16	16	34.5	34.5	-0.5
	54	22	16	16	34.5	34.5	-0.5
	56	20	20	16	34.5	34.5	2.5
	58	22	20	16	34.5	34.5	2.5
	60	22	22	16	34.5	34.5	2.5
High efficiency model	20	10	10	–	23	21	-7.0
	22	12	10	–	23	21	-7.0
	36	12	12	12	34.5	31.5	-12.5
	38	14	12	12	34.5	32.5	-10.5
	40	14	14	12	34.5	33.5	-8.5
	42	14	14	14	34.5	34.5	-4.5
	44	16	14	14	34.5	34.5	-4.5
	54	20	20	14	34.5	34.5	1.5

Table1-4 ; For HT8P-A model

	System	Combination			Charged refrigerant	Compensation by System HP
	HP	HP			kg	kg
Standard model	8	8	–	–	11.5	-3.5
	10	10	–	–	11.5	-3.5
	12	12	–	–	11.5	-1.5
	14	14	–	–	11.5	-1.0
	16	16	–	–	11.5	-0.5
	18	18	–	–	11.5	1.5
	20	20	–	–	11.5	1.5
	22	12	10	–	23	-7.0
	24	12	12	–	23	-3.0
	26	14	12	–	23	-2.5
	28	16	12	–	23	-2.0
	30	16	14	–	23	-1.5
	32	16	16	–	23	-1.0
	34	18	16	–	23	1.0
	36	20	16	–	23	1.0
	38	20	18	–	23	3.0
	40	20	20	–	23	3.0
	42	16	14	12	34.5	-6.5
	44	16	16	12	34.5	-6.5
	46	16	16	14	34.5	-6.5
	48	16	16	16	34.5	-6.5
	50	18	16	16	34.5	-0.5
	52	20	16	16	34.5	-0.5
	54	20	20	14	34.5	1.5
	56	20	20	16	34.5	2.5
High efficiency model	20	10	10	–	23	-7.0
	36	12	12	12	34.5	-12.5
	38	14	12	12	34.5	-10.5
	40	14	14	12	34.5	-8.5

Table1-5 ; T8P, T7P, T8P-SG, T8P-ID, T8P-T model

	System	Combination			Charged refrigerant	Compensation by System HP
	HP	HP			kg	kg
Space saving	8	8	-	-	10.5	-2.5
	10	10	-	-	10.5	-2.5
	12	12	-	-	10.5	-0.5
	14B	14B	-	-	10.5	-0.5
	16	16	-	-	11.5	-0.5
	18B	18B	-	-	11.5	-0.5
	20	20	-	-	11.5	1.5
	22	22	-	-	11.5	1.5
	24	12	12	-	21.0	-5.0
	26	14B	12	-	21.0	-5.0
	28	14B	14B	-	21.0	-5.0
	30	16	14B	-	22.0	-4.0
	32	16	16	-	23.0	-3.0
	34	18B	16	-	23.0	-3.0
	36	18B	18B	-	23.0	-3.0
	38	22	16	-	23.0	0.0
	40	22	18B	-	23.0	0.0
	42	22	20	-	23.0	3.0
	44	22	22	-	23.0	3.0
	46	16	16	14B	33.5	-5.5
	48	16	16	16	34.5	-4.5
	50	18B	16	16	34.5	-4.5
	52	18B	18B	16	34.5	-4.5
	54	18B	18B	18B	34.5	-4.5
	56	20	18B	18B	34.5	-1.5
	58	22	18B	18B	34.5	-1.5
	60	22	22	16	34.5	1.5
High Efficiency / High Diversity	8	8	-	-	10.5	-2.5
	10	10	-	-	10.5	-2.5
	12	12	-	-	10.5	-0.5
	14	14	-	-	11.5	-1.0
	16	16	-	-	11.5	-0.5
	18	18	-	-	11.5	1.5
	20	10	10	-	21.0	-5.0
	22	12	10	-	21.0	-5.0
	24	12	12	-	21.0	-5.0
	26	14	12	-	22.0	-4.0
	28	14	14	-	23.0	-3.0
	30	16	14	-	23.0	-3.0
	32	16	16	-	23.0	-3.0
	34	18	16	-	23.0	0.0
	36	12	12	12	31.5	-7.5
	38	14	12	12	32.5	-6.5
	40	14	14	12	33.5	-5.5
	42	14	14	14	34.5	-4.5
	44	16	14	14	34.5	-4.5
	46	16	16	14	34.5	-4.5
	48	16	16	16	34.5	-4.5
	50	18	16	16	34.5	-1.5
	52	20	16	16	34.5	-1.5
	54	20	20	14	34.5	1.5
	56	20	20	16	34.5	1.5
	58	22	20	16	34.5	1.5
	60	22	22	16	34.5	1.5

Table 1-6; For HT8P-C model

	System	Combination			Charged refrigerant	Compensation by System HP
Standard model	HP	HP			kg	kg
	8	-	-		-	-
	10	-	-		-	-
	12	-	-		-	-
	14	-	-		-	-
	16	16	-	-	11.5	-0.5
	18	18	-	-	11.5	1.5
	20	20	-	-	11.5	1.5
	22	22	-	-	11.5	1.5
	24	-	-		-	-
	26	-	-		-	-
	28	-	-		-	-
	30	-	-		-	-
	32	-	-		-	-
	34	18	16	-	23.0	1.0
	36	20	16	-	23.0	1.0
	38	22	16	-	23.0	1.0
	40	20	20	-	23.0	3.0
	42	22	20	-	23.0	3.0
	44	22	22	-	23.0	3.0
	46	-	-		-	-
	48	16	16	16	34.5	-6.5
	50	18	16	16	34.5	-0.5
	52	20	16	16	34.5	-0.5
	54	22	16	16	34.5	-0.5
	56	20	20	16	34.5	2.5
	58	22	20	16	34.5	2.5
	60	22	22	16	34.5	2.5

Table 2

Additional refrigerant charge amount Indoor unit	Standard Indoor unit	Fresh Air Intake Indoor Unit	Air to Air Heat exchanger with DX-coil	Hot Water Module
Addition kg/HP	0.4	0.2	0.2	0

Table 3

Pipe dia. at liquid side	mm	ø6.4	ø9.5	ø12.7	ø15.9	ø19.0	ø22.2
Additional refrigerant amount/1m	kg/m	0.025	0.055	0.105	0.160	0.250	0.350

Charging of refrigerant

- Keeping the valve of the outdoor unit closed, be sure to charge the liquid refrigerant into the service port at the liquid side.
- If the specified amount of refrigerant cannot be charged, fully open the valves of the outdoor unit at liquid and gas sides, operate the air conditioner in COOL mode, and then charge refrigerant into service port at the gas side. In this time, choke the refrigerant slightly by operating the valve of the canister to charge liquid refrigerant.
- The liquid refrigerant may be charged suddenly, therefore be sure to charge refrigerant gradually.

Refrigerant (R410A)

This air conditioner adopts a HFC type refrigerant (R410A) which does not deplete the ozone layer.

1. Safety Caution Concerned to refrigerant (R410A)

The pressure of R410A is high 1.6 times of that of the former refrigerant (R22). Accompanied with change of refrigerant, the refrigerating oil has been also changed. Therefore, be sure that water, dust, the former refrigerant or the former refrigerating oil is not mixed into the refrigerating cycle of the air conditioner with new refrigerant during installation work or service work. If an incorrect work or incorrect service is performed, there is a possibility to cause a serious accident. Use the tools and materials exclusive to R410A to purpose a safe work.

2. Cautions on Installation/Service

(1) Do not mix the other refrigerant or refrigerating oil.
For the tools exclusive to R410A, shapes of all the joints including the service port differ from those of the former refrigerant in order to prevent mixture of them.

(2) As the use pressure of the refrigerant (R410A) is high, use material thickness of the pipe and tools which are specified for R410A.

(3) In the installation time, use clean pipe materials and work with great attention so that water and others do not mix in because pipes are affected by impurities such as water, oxide scales, oil, etc. Use the clean pipes.
Be sure to brazing with flowing nitrogen gas. (Never use gas other than nitrogen gas.)

(4) For the earth protection, use a vacuum pump for air purge.

(5) R410A refrigerant is azeotropic mixture type refrigerant. Therefore use liquid type to charge the refrigerant.
(If using gas for charging, composition of the refrigerant changes and then characteristics of the air conditioner change.)

3. Pipe Materials

For the refrigerant pipes, copper pipe and joints are mainly used. It is necessary to select the most appropriate pipes to conform to the standard. Use clean material in which impurities adhere inside of pipe or joint to a minimum.

(1) Copper pipe

<Piping>
The pipe thickness, flare finishing size, flare nut and others differ according to a refrigerant type.
When using a long copper pipe for R410A, it is recommended to select “Copper or copper-base pipe without seam” and one with bonded oil amount 40mg/10m or less. Also do not use crushed, deformed, discolored (especially inside) pipes. (Impurities cause clogging of expansion valves and capillary tubes.)

<Flare nut>
Use the flare nuts which are attached to the air conditioner unit.

(2) Joint
The flare joint and socket joint are used for joints of the copper pipe. The joints are rarely used for installation of the air conditioner. However clear impurities when using them.

4. Tools

(1) Required Tools for R410A

Mixing of different types of oil may cause a trouble such as generation of sludge, clogging of capillary, etc. Accordingly, the tools to be used are classified into the following three types.

1) Tools exclusive for R410A (Those which cannot be used for conventional refrigerant (R22))
2) Tools exclusive for R410A, but can be also used for conventional refrigerant (R22)
3) Tools commonly used for R410A and for conventional refrigerant (R22)

The table below shows the tools exclusive for R410A and their interchangeability.

Tools exclusive for R410A (The following tools for R410A are required.)

Explanation of symbols

△: Newly prepared (It is necessary to use it exclusively with R410A, separately from those for R22 ◎ or R407C.) : Former tool is available.

Used tools	Usage	Proper use of tools/parts
Gauge manifold	Vacuuming, charging refrigerant and operation check	△ Exclusive to R410A
Charging hose		△ Exclusive to R410A
Charging cylinder	Charging refrigerant	Unusable (Use the Refrigerant charging balance.)
Gas leak detector	Checking gas leak	△ Exclusive to R410A
Vacuum pump	Vacuum drying	Usable if a counter-flow preventive adapter is attached
Vacuum pump with counterflow	Vacuum drying	◎ R22 (Existing article)
Flare tool	Flare processing of pipes	◎ Usable by adjusting size
Bender	Bending processing of pipes	◎ R22 (Existing article)
Refrigerant recovery device	Recovering refrigerant	△ Exclusive to R410A
Torque wrench	Tightening flare nut	△ Exclusive to Ø12.7mm and Ø15.9mm
Pipe cutter	Cutting pipes	◎ R22 (Existing article)
Refrigerant canister	Charging refrigerant	△ Exclusive to R410A Enter the refrigerate name for identification
Brazing machine/ Nitrogen gas cylinder	Brazing of pipes	◎ R22 (Existing article)
Refrigerant charging balance	Charging refrigerant	◎ R22 (Existing article)

(Note 1) When flaring is carried out for R410A using the conventional flare tools, adjustment of projection margin is necessary. For this adjustment, a copper pipe gauge, etc. are necessary.**(Note 2)** Charging cylinder for R410A is being currently developed.

General tools (Conventional tools can be used.)

In addition to the above exclusive tools, the following equipments which serve also for R22 are necessary as the general tools.

(1) Vacuum pump
Use vacuum pump by attaching vacuum pump adapter.
(2) Torque wrench
(3) Pipe cutter
(4) Reamer
(5) Pipe bender
(6) Level vial
(7) Screwdriver (+, –)
(8) Spanner or Monkey wrench
(9) Hole core drill
(10)Hexagon wrench (Opposite side 4mm)
(11)Tape measure
(12)Metal saw

Also prepare the following equipments for other installation method and run check.

(1) Clamp meter
(2) Thermometer
(3) Insulation resistance tester
(4) Electroscope

1 Wiring Diagrams

1-1. Outdoor Unit

Models: MMY-MAP0806*, MAP1006*, and MAP1206*

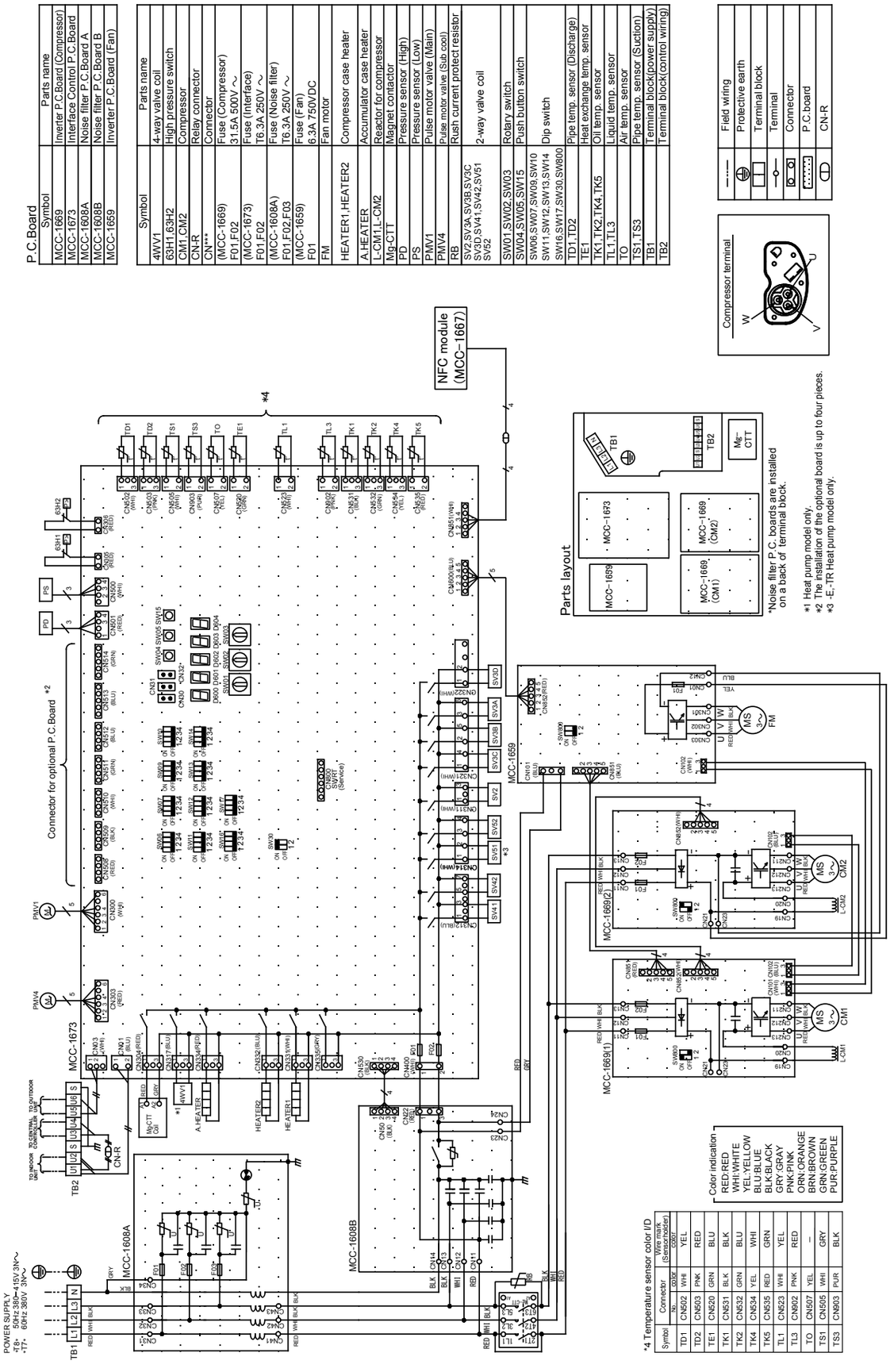

Models: MMY-MAP1406* and MAP1606*

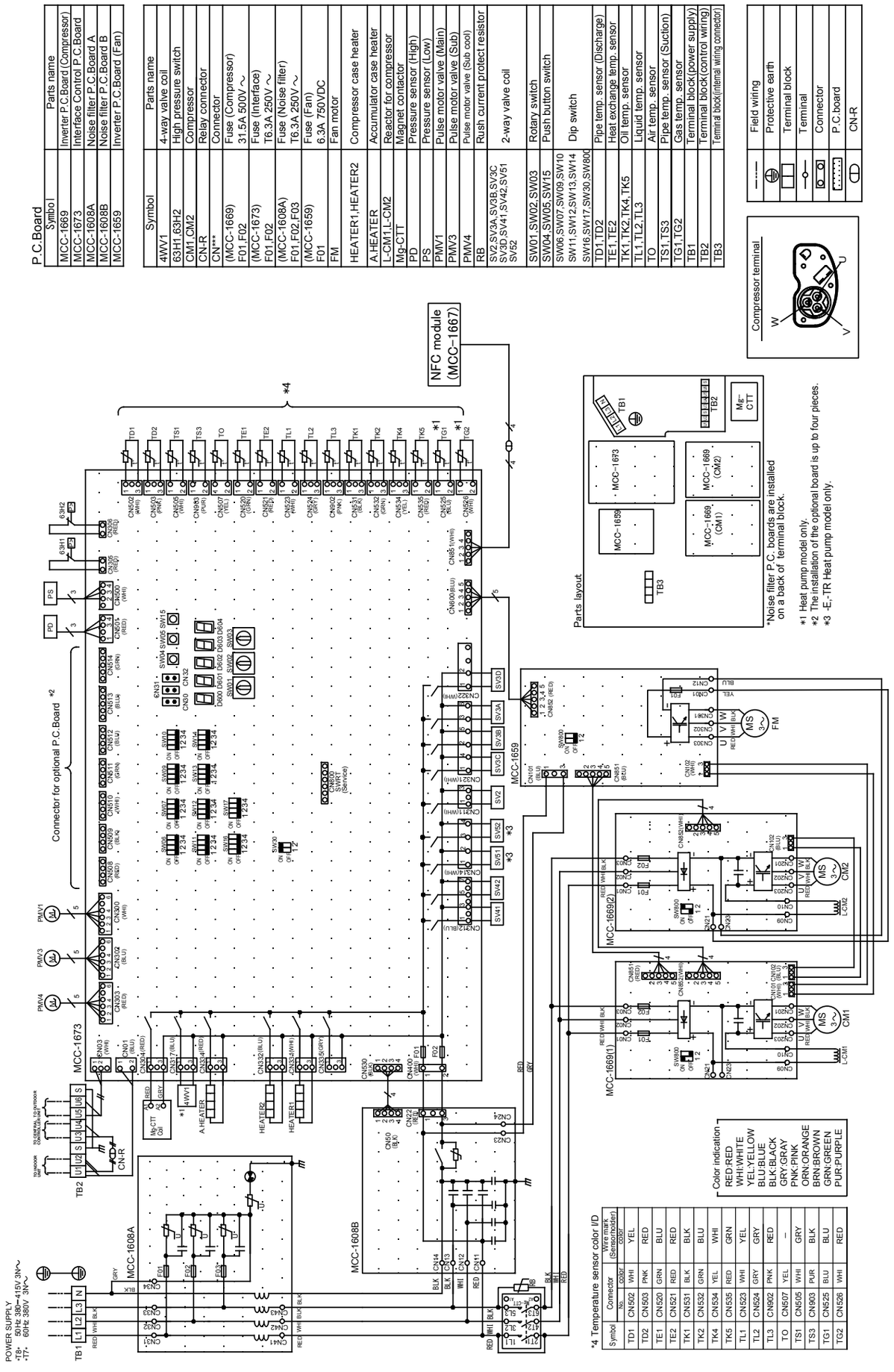

Models: MMY-MAP1806*, MAP2006*, and MAP2206*

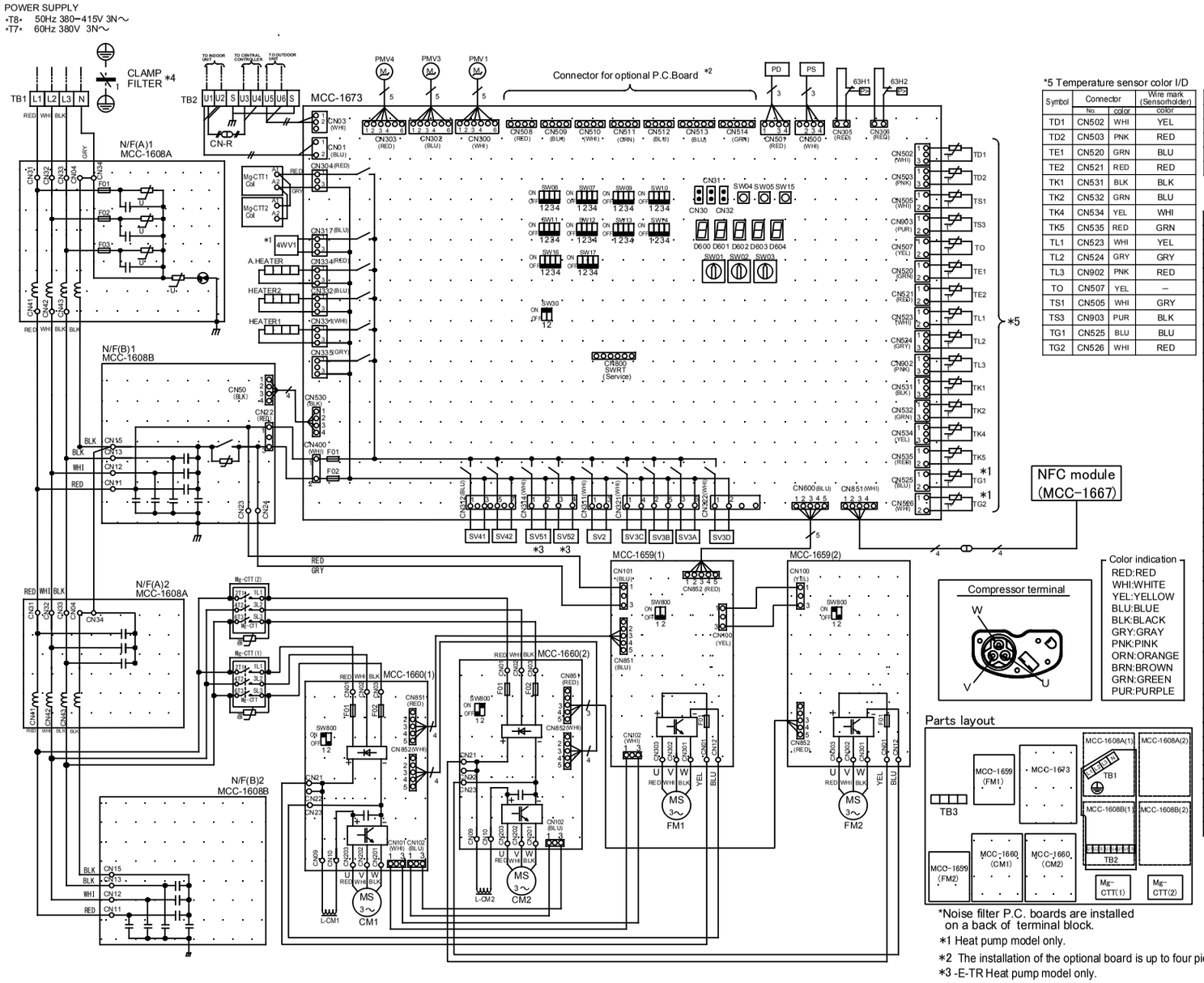

*5 Temperature sensor color I/D

Symbol	Connector No.	Connector color	Wire mark (Sensorholder) color
TD1	CN502	WHI	YEL
TD2	CN503	PNK	RED
TE1	CN520	GRN	BLU
TE2	CN521	RED	RED
TK1	CN531	BLK	BLK
TK2	CN532	GRN	BLU
TK4	CN534	YEL	WHI
TK5	CN535	RED	GRN
TL1	CN523	WHI	YEL
TL2	CN524	GRY	GRY
TL3	CN902	PNK	RED
TO	CN507	YEL	–
TS1	CN505	WHI	GRY
TS3	CN903	PUR	BLK
TG1	CN525	BLU	BLU
TG2	CN526	WHI	RED

P.C.Board

Symbol	Parts name
MCC-1660	Inverter P.C.Board (Compressor)
MCC-1673	Interface Control P.C.Board
MCC-1608A	Noise filter P.C.Board A
MCC-1608B	Noise filter P.C.Board B
MCC-1659	Inverter P.C.Board (Fan)

Symbol	Parts name
4WV1	4-way valve coil
63H1,63H2	High pressure switch
CM1,CM2	Compressor
CN-R	Relay connector
CN***	Connector
(MCC-1660) F01,F02	Fuse (Compressor) 40A 500V ~
(MCC-1673) F01,F02	Fuse (Interface) T6.3A 250V ~
(MCC-1608A) F01,F02,F03	Fuse (Noise filter) T6.3A 250V ~
(MCC-1659) F01	Fuse (Fan) 6.3A 750VDC
FM1,FM2	Fan motor
HEATER1,HEATER2	Compressor case heater
A.HEATER	Accumulator case heater
L-CM1,L-CM2	Reactor for compressor
Mg-CTT1,Mg-CTT2	Magnet contactor
PD	Pressure sensor (High)
PS	Pressure sensor (Low)
PMV1	Pulse motor valve (Main)
PMV3	Pulse motor valve (Sub)
PMV4	Pulse motor valve (Sub cool)
RB	Rush current protect resistor
SV2,SV3A,SV3B,SV3C SV3D,SV41,SV42,SV51 SV52	2-way valve coil
SW01,SW02,SW03	Rotary switch
SW04,SW05,SW15	Push button switch
SW06,SW07,SW09,SW10 SW11,SW12,SW13,SW14 SW16,SW17,SW30,SW800	Dip switch
TD1,TD2	Pipe temp. sensor (Discharge)
TE1,TE2	Heat exchange temp. sensor
TK1,TK2,TK4,TK5	Oil temp. sensor
TL1,TL2,TL3	Liquid temp. sensor
TO	Air temp. sensor
TS1,TS3	Pipe temp. sensor (Suction)
TG1,TG2	Gas temp. sensor
TB1	Terminal block(power supply)
TB2	Terminal block(control wiring)
TB3	Terminal block(internal wiring connector)

Compressor terminal

Color indication
RED:RED
WHI:WHITE
YEL:YELLOW
BLU:BLUE
BLK:BLACK
GRY:GRAY
PNK:PINK
ORN:ORANGE
BRN:BROWN
GRN:GREEN
PUR:PURPLE

Parts layout

*Noise filter P.C. boards are installed on a back of terminal block.

*1 Heat pump model only.

*2 The installation of the optional board is up to four pieces.

*3 -E-TR Heat pump model only.

*4 Install the attached Clamp filter on-site.

	Field wiring
	Protective earth
	Terminal block
	Terminal
	Connector
	P.C.board
	CN-R

Models: MMY-MAP0806HT8P-A, MAP1006HT8P-A and MAP1206HP8P-A

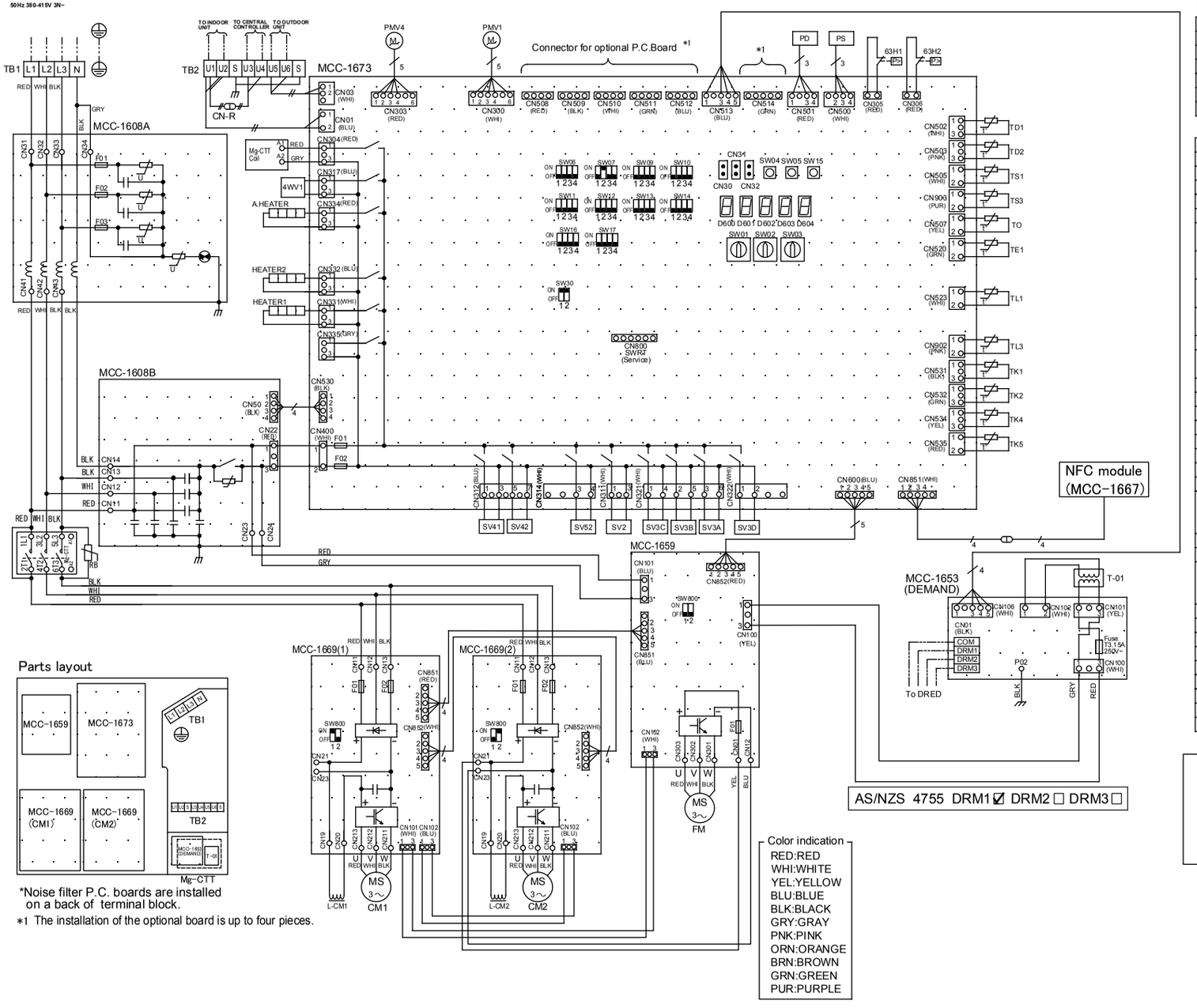

Parts layout

*Noise filter P.C. boards are installed on a back of terminal block.

*1 The installation of the optional board is up to four pieces.

P.C.Board

Symbol	Parts name
MCC-1669	Inverter P.C.Board (Compressor)
MCC-1673	Interface Control P.C.Board
MCC-1608A	Noise filter P.C.Board A
MCC-1608B	Noise filter P.C.Board B
MCC-1659	Inverter P.C.Board (Fan)
MCC-1653	Demand P.C.Board

Symbol	Parts name
4WV1	4-way valve coil
63H1,63H2	High pressure switch
CM1,CM2	Compressor
CN-R	Relay connector
CN***	Connector
(MCC-1669) F01,F02	Fuse (Compressor) 31.5A 500V ～
(MCC-1673) F01,F02	Fuse (Interface) T6.3A 250V ～
(MCC-1608A) F01,F02,F03	Fuse (Noise filter) T6.3A 250V ～
(MCC-1659) F01	Fuse (Fan) 6.3A 750VDC
FM	Fan motor
HEATER1,HEATER2	Compressor case heater
A.HEATER	Accumulator case heater
L-CM1,L-CM2	Reactor for compressor
Mg-CTT	Magnet contactor
PD	Pressure sensor (High)
PS	Pressure sensor (Low)
PMV1	Pulse motor valve (Main)
PMV4	Pulse motor valve (Sub cool)
RB	Rush current protect resistor
SV2,SV3A,SV3B,SV3C SV3D,SV41,SV42,SV52	2-way valve coil
SW01,SW02,SW03	Rotary switch
SW04,SW05,SW15	Push button switch
SW06,SW07,SW09,SW10 SW11,SW12,SW13,SW14 SW16,SW17,SW30,SW800	Dip switch
TD1,TD2	Pipe temp. sensor (Discharge)
TE1	Heat exchange temp. sensor
TK1,TK2,TK4,TK5	Oil temp. sensor
TL1,TL3	Liquid temp. sensor
TO	Air temp. sensor
TS1,TS3	Pipe temp. sensor (Suction)
TB1	Terminal block(power supply)
TB2	Terminal block(control wiring)
T-01	Trance

Compressor terminal

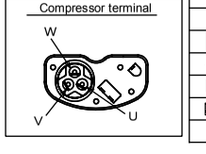

	Field wiring
	Protective earth
	Terminal block
	Terminal
	Connector
	P.C.board
	CN-R

Models: MMY-MAP1406HT8P-A and MAP1606HT8P-A

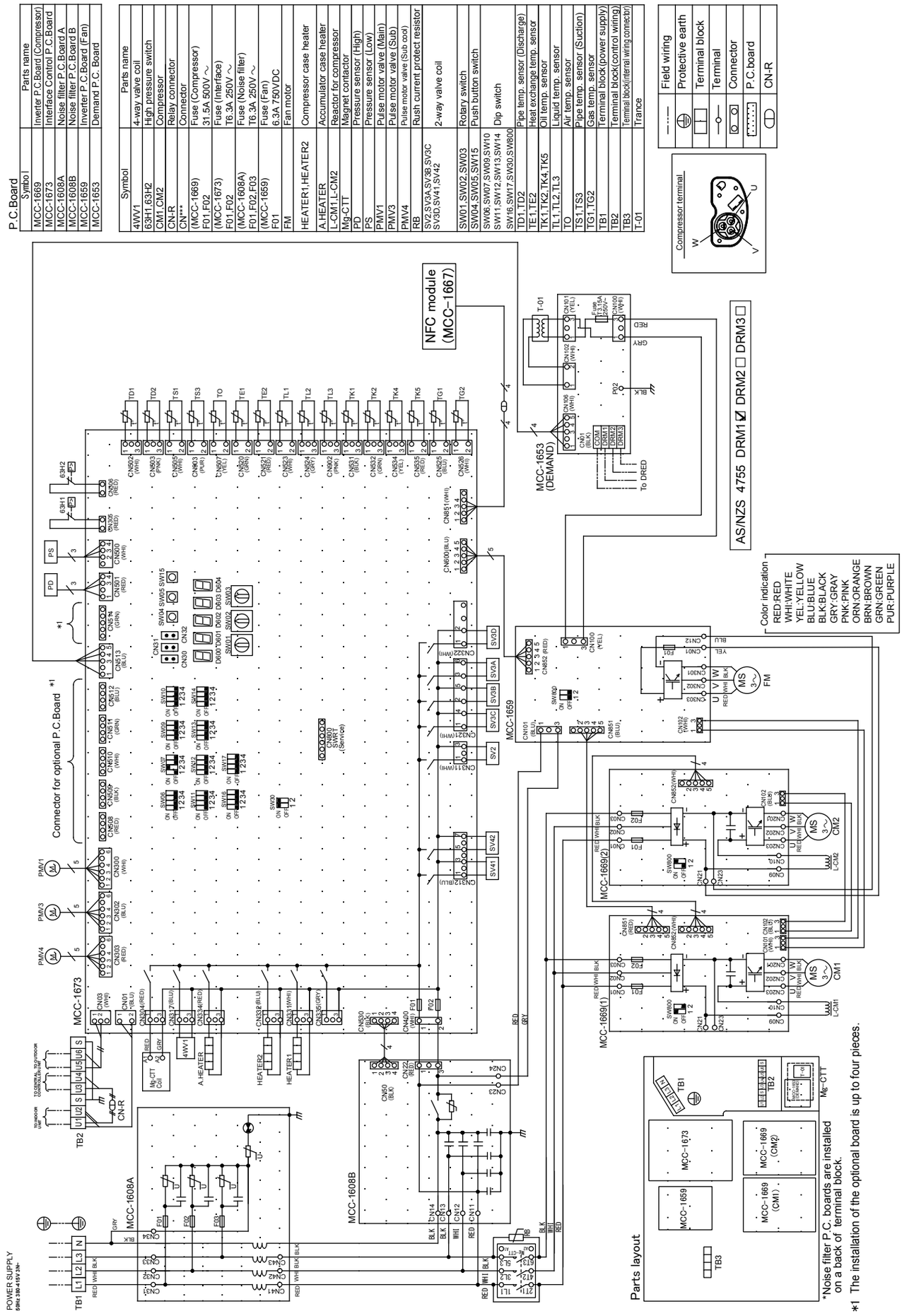

Models: MMY-MAP1806HT8P-A and MAP2006HT8P-A

P.C.Board

Symbol	Parts name
MCC-1660	Inverter P.C.Board (Compressor)
MCC-1673	Interface Control P.C.Board
MCC-1608A	Noise filter P.C.Board A
MCC-1608B	Noise filter P.C.Board B
MCC-1659	Inverter P.C.Board (Fan)
MCC-1653	Demand P.C.Board

Symbol	Parts name
4WV1	4-way valve coil
63H1,63H2	High pressure switch
CM1,CM2	Compressor
CN-R	Relay connector
CN***	Connector
(MCC-1660) F01,F02	Fuse (Compressor) 40A 500V ～
(MCC-1673) F01,F02	Fuse (Interface) T6.3A 250V ～
(MCC-1608A) F01,F02,F03	Fuse (Noise filter) T6.3A 250V ～
(MCC-1659) F01	Fuse (Fan) 6.3A 750VDC
FM1,FM2	Fan motor
HEATER1,HEATER2	Compressor case heater
A.HEATER	Accumulator case heater
L-CM1,L-CM2	Reactor for compressor
Mg-CTT1,Mg-CTT2	Magnet contactor
PD	Pressure sensor (High)
PS	Pressure sensor (Low)
PMV1	Pulse motor valve (Main)
PMV3	Pulse motor valve (Sub)
PMV4	Pulse motor valve (Sub cool)
RB	Rush current protect resistor
SV2,SV3A,SV3B,SV3C SV3D,SV41,SV42	2-way valve coil
SW01,SW02,SW03	Rotary switch
SW04,SW05,SW15	Push button switch
SW06,SW07,SW09,SW10 SW11,SW12,SW13,SW14 SW16,SW17,SW30,SW800	Dip switch
TD1,TD2	Pipe temp. sensor (Discharge)
TE1,TE2	Heat exchange temp. sensor
TK1,TK2,TK4,TK5	Oil temp. sensor
TL1,TL2,TL3	Liquid temp. sensor
TO	Air temp. sensor
TS1,TS3	Pipe temp. sensor (Suction)
TG1,TG2	Gas temp. sensor
TB1	Terminal block(power supply)
TB2	Terminal block(control wiring)
TB3	Terminal block(internal wiring connector)
T-01	Trance

	Field wiring
	Protective earth
	Terminal block
	Terminal
	Connector
	P.C.board
	CN-R

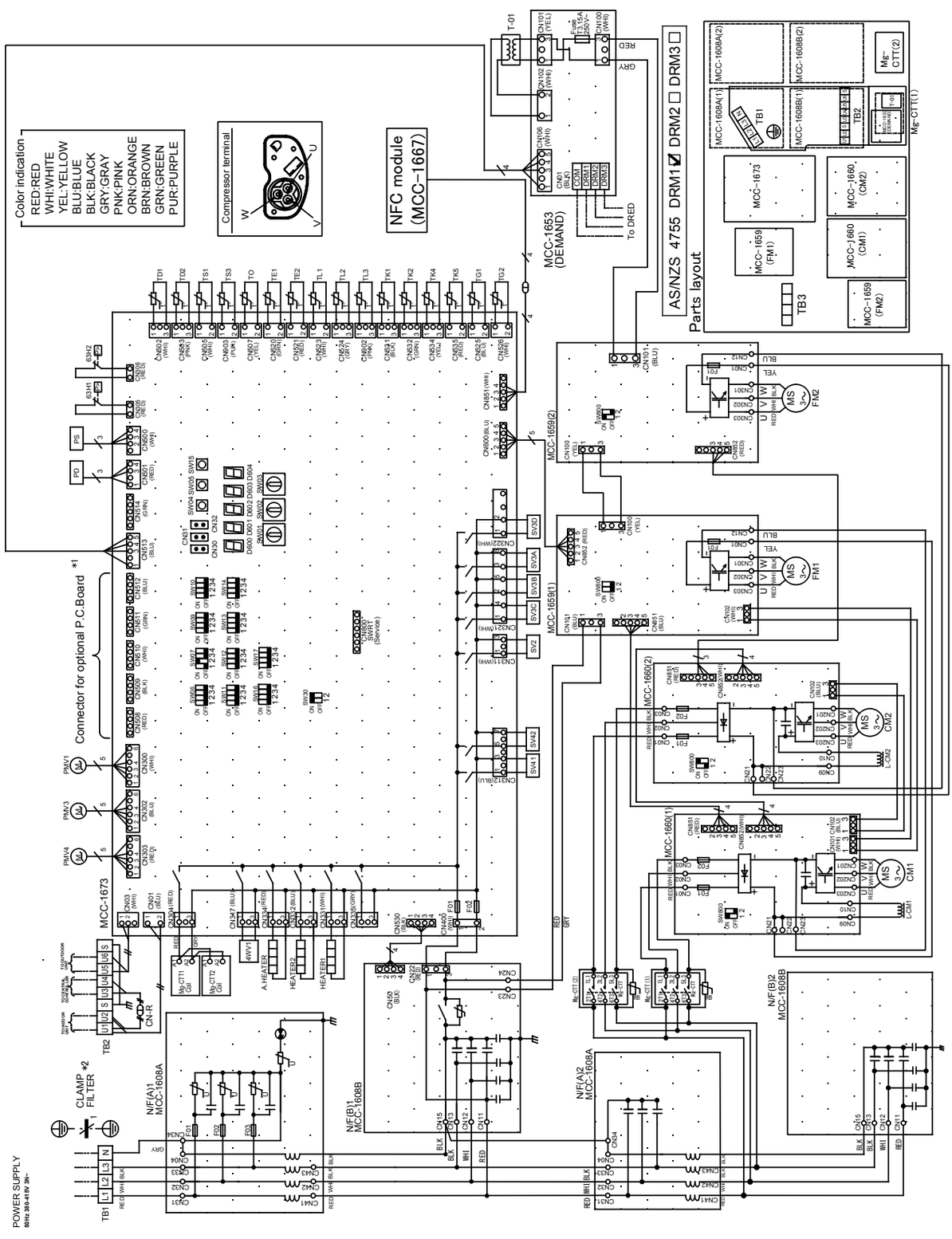

*Noise filter P.C. boards are installed on a back of terminal block.

*1 The installation of the optional board is up to four pieces.

*2 Install the attached Clamp filter on-site.

Models: MMY-MAP0806T*(J)P*, MAP1006T*(J)P*, MAP1206*(J)P* and MAP14B6T*(J)P*

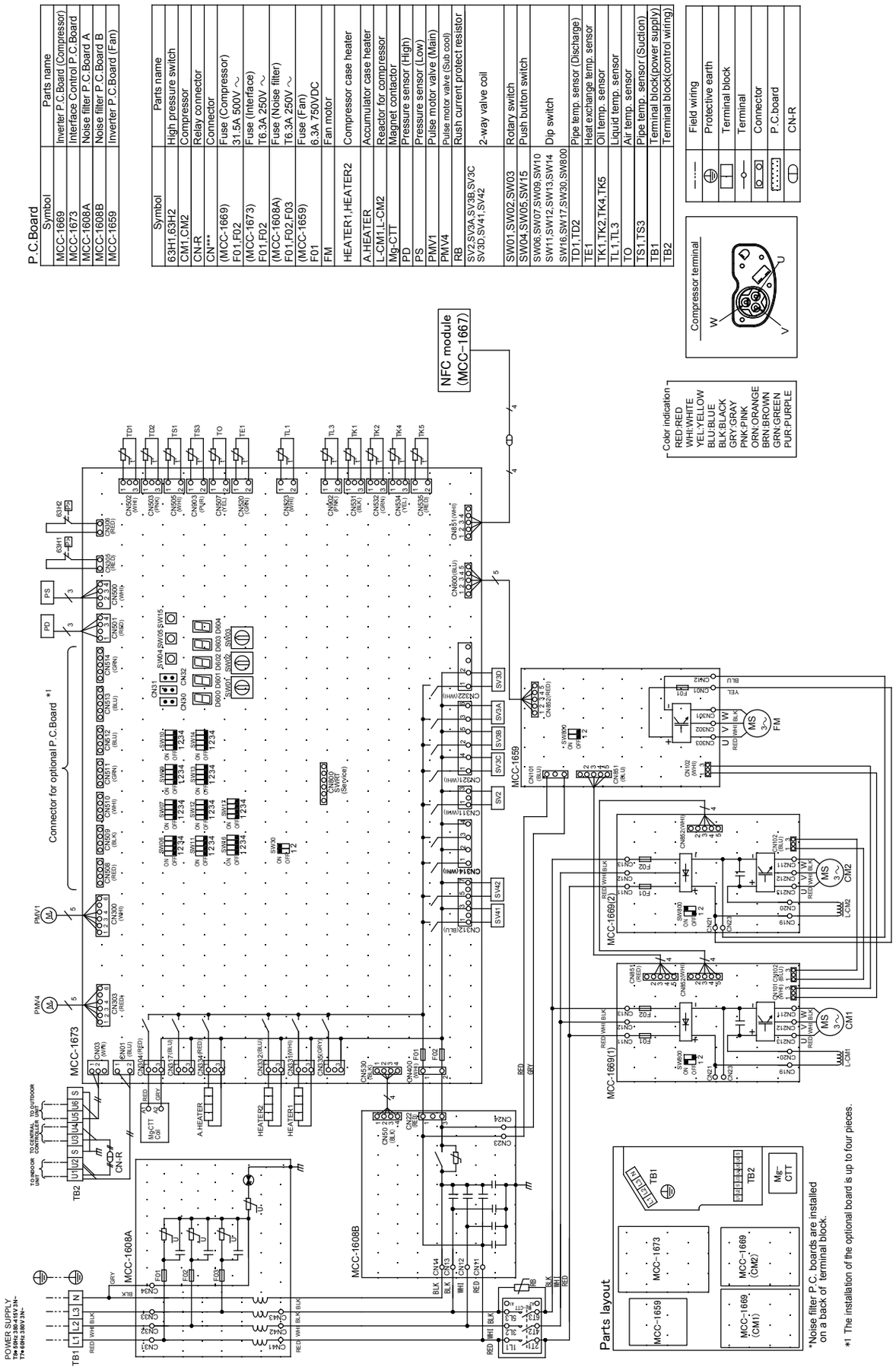

Models: MMY-MAP1406T*(J)P*, MAP1606T*(J)P* and MAP18B6*(J)P*

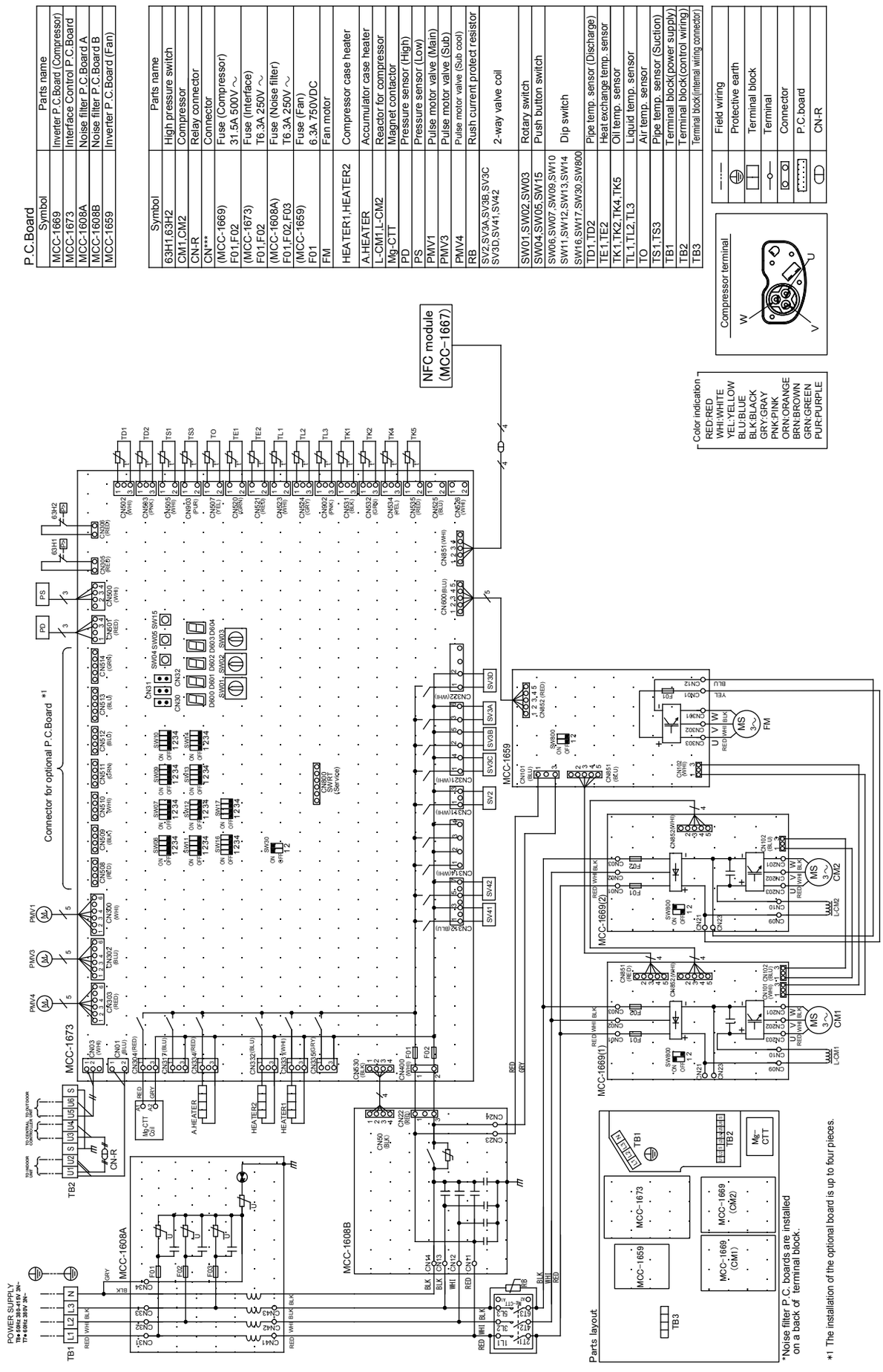

Models: MMY-MAP1806T*(J)P*, MAP2006T*(J)P* and MAP2206*(J)P*

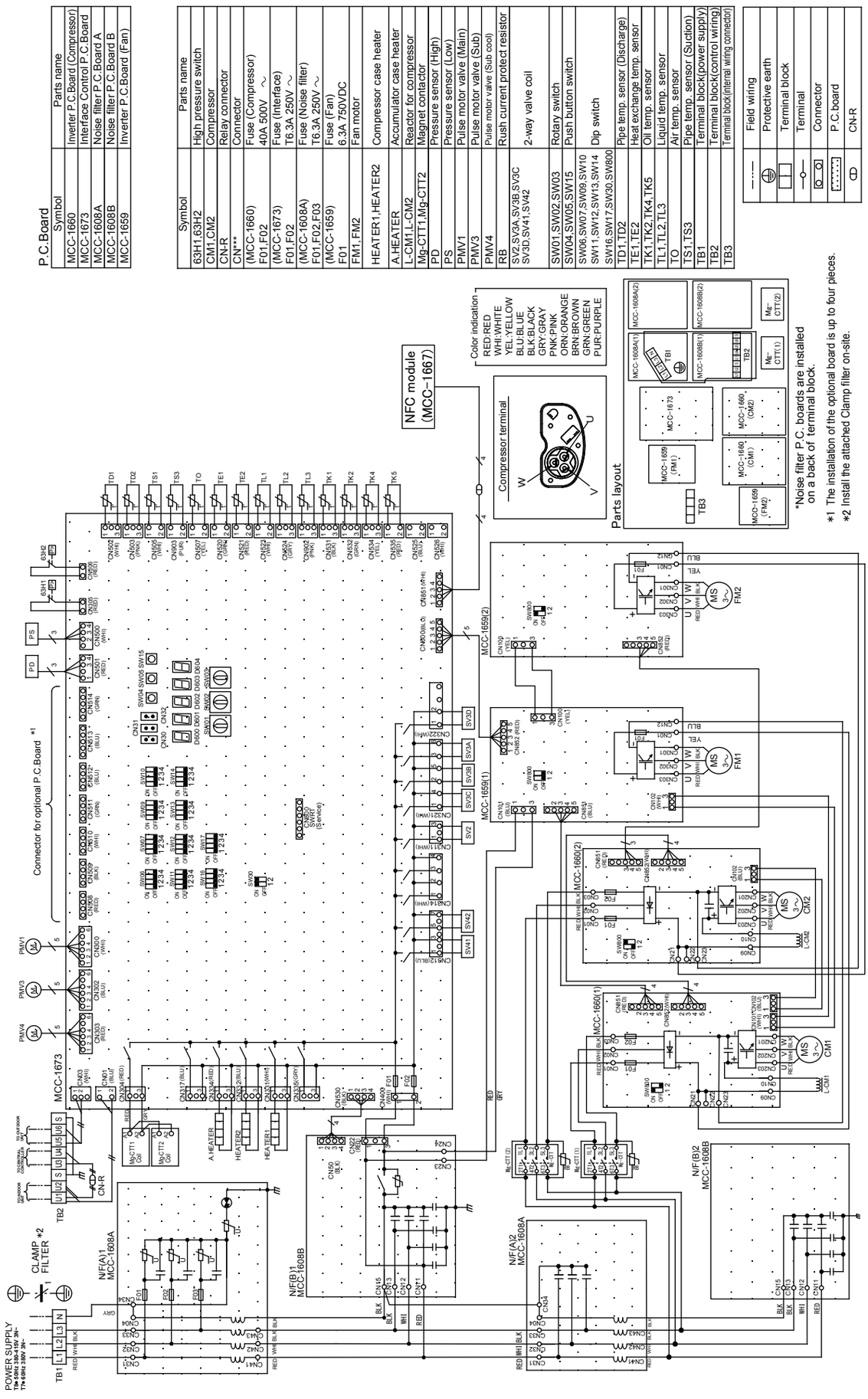

P.C.Board

Symbol	Parts name
MCC-1660	Inverter P.C.Board (Compressor)
MCC-1673	Interface Control P.C.Board
MCC-1608A	Noise filter P.C.Board A
MCC-1608B	Noise filter P.C.Board B
MCC-1659	Inverter P.C.Board (Fan)

Symbol	Parts name
63H1,63H2	High pressure switch
CM1,CM2	Compressor
CN-R	Relay connector
CN***	Connector
(MCC-1660) F01,F02	Fuse (Compressor) 40A 500V ～
(MCC-1673) F01,F02	Fuse (Interface) T6.3A 250V ～
(MCC-1608A) F01,F02,F03	Fuse (Noise filter) T6.3A 250V ～
(MCC-1659) F01	Fuse (Fan) 6.3A 750V/DC
FM1,FM2	Fan motor
HEATER1,HEATER2	Compressor case heater
A.HEATER	Accumulator case heater
L-CM1,L-CM2	Reactor for compressor
Mg-CTT1,Mg-CTT2	Magnet contactor
PD	Pressure sensor (High)
PS	Pressure sensor (Low)
PMV1	Pulse motor valve (Main)
PMV3	Pulse motor valve (Sub)
PMV4	Pulse motor valve (Sub cool)
RB	Rush current protect resistor
SV2,SV3A,SV3B,SV3C SV3D,SV41,SV42	2-way valve coil
SW01,SW02,SW03	Rotary switch
SW04,SW05,SW15	Push button switch
SW06,SW07,SW09,SW10 SW11,SW12,SW13,SW14 SW16,SW17,SW30,SW800	Dip switch
TD1,TD2	Pipe temp. sensor (Discharge)
TE1,TE2	Heat exchange temp. sensor
TK1,TK2,TK4,TK5	Oil temp. sensor
TL1,TL2,TL3	Liquid temp. sensor
TO	Air temp. sensor
TS1,TS3	Pipe temp. sensor (Suction)
TB1	Terminal block(power supply)
TB2	Terminal block(control wiring)
TB3	Terminal block(internal wiring connector)

	Field wiring
	Protective earth
	Terminal block
	Terminal
	Connector
	P.C.board
	CN-R

2 Parts Rating

2-1. Outdoor Unit (50Hz model: MMY-MAP∗∗∗6∗T8∗P∗)

	Name	Model	Specification	MMY-MAP0806(H)T8(J)P*	MMY-MAP1006(H)T8(J)P*	MMY-MAP1206(H)T8(J)P*	MMY-MAP14B6T8(J)P*	MMY-MAP1406(H)T8(J)P*	MMY-MAP1606(H)T8(J)P*	MMY-MAP18B6T8(J)P*	MMY-MAP1806(H)T8(J)P*	MMY-MAP2006(H)T8(J)P*	MMY-MAP2206(H)T8(J)P*
1	Compressor	RA421A3TB-20MD	Output:2.1kW×2	○									
1	Compressor	RA421A3TB-20MD	Output:3.1kW×2		○								
1	Compressor	RA421A3TB-20MD	Output:3.9kW×2			○							
1	Compressor	RA421A3TB-20MD	Output:5.4kW×2				○						
1	Compressor	RA641A3TB-20M	Output:2.8kW×2										
1	Compressor	RA641A3TB-20M	Output:3.7kW×2										
1	Compressor	RA641A3TB-20M	Output:4.8kW×2					○					
1	Compressor	RA641A3TB-20M	Output:5.8kW×2						○				
1	Compressor	RA641A3TB-20M	Output:6.9kW×2							○			
1	Compressor	RA641A3TB-20M	Output:4.0kW×2										
1	Compressor	RA641A3TB-20M	Output:4.7kW×2										
1	Compressor	RA641A3TB-20M	Output:6.5kW×2								○		
1	Compressor	RA641A3TB-20M	Output:7.6kW×2									○	
1	Compressor	RA641A3TB-20M	Output:9.0kW×2										○
2	4-way valve coil*1	SHF	AC220-240V 50Hz	○	○	○		○	○		○	○	○
3	2-way valve coil	VPV	AC220-240V 50Hz SV3B, SV51*2	○	○	○	○	○	○	○	○	○	○
3	2-way valve coil	TEV	AC220-240V 50Hz SV2, 3A, 3C, 3D	○	○	○	○	○	○	○	○	○	○
3	2-way valve coil	FQ-G593	AC220-240V 50Hz SV41, 42	○	○	○	○	○	○	○	○	○	○
			AC220-240V 50Hz SV52	○*1	○*1	○*1		○*2	○*2		○*2	○*2	○*2
4	Pulse motor valve coil	PAM	DC12V	○	○	○	○	○	○	○	○	○	○
4	Pulse motor valve coil	UKV	DC12V	○	○	○	○	○	○	○	○	○	○
5	High-presure SW	ACB-4UB154W	OFF:4.15MPa ON:3.2MPa	○	○	○	○	○	○	○	○	○	○
6	Pressure sensor(For high pressure)	NSK-BH038F-460	0.5~4.5V/0~3.92MPa	○	○	○	○	○	○	○	○	○	○
7	Pressure sensor(For low pressure)	NSK-BH010F-460	0.5~3.5V/0~0.98MPa	○	○	○	○	○	○	○	○	○	○
8	Fan motor	WDF-620A1000	DC530-620	○	○	○	○	○	○	○	○	○	○
9	Case heater(For comp.)		AC240V/29W	○	○	○	○	○	○	○	○	○	○
10	Case heater(For accum.)		AC240V/55W	○	○	○	○	○	○	○	○	○	○
11	Fusible plug		73℃	○	○	○	○	○	○	○	○	○	○

*1 : Heat pump model only.
*2 : -E, -TR of heat pump model only.

2-2. Outdoor Unit (60Hz model: MMY-MAP***6HT7*P*)

	Name	Model	Specification	MMY-MAP0806(H)T7(J)P*	MMY-MAP1006(H)T7(J)P*	MMY-MAP1206(H)T7(J)P*	MMY-MAP14B6T7(J)P*	MMY-MAP1406(H)T7(J)P*	MMY-MAP1606(H)T7(J)P*	MMY-MAP18B6T7(J)P*	MMY-MAP1806(H)T7(J)P*	MMY-MAP2006(H)T7(J)P*	MMY-MAP2206(H)T7(J)P*
1	Compressor	RA421A3TB-20MD	Output:2.1kW×2	○									
1	Compressor	RA421A3TB-20MD	Output:3.1kW×2		○								
1	Compressor	RA421A3TB-20MD	Output:3.9kW×2			○							
1	Compressor	RA421A3TB-20MD	Output:5.4kW×2				○						
1	Compressor	RA641A3TB-20M	Output:2.8kW×2										
1	Compressor	RA641A3TB-20M	Output:3.7kW×2										
1	Compressor	RA641A3TB-20M	Output:4.8kW×2					○					
1	Compressor	RA641A3TB-20M	Output:5.8kW×2						○				
1	Compressor	RA641A3TB-20M	Output:6.9kW×2							○			
1	Compressor	RA641A3TB-20M	Output:4.0kW×2										
1	Compressor	RA641A3TB-20M	Output:4.7kW×2										
1	Compressor	RA641A3TB-20M	Output:6.5kW×2								○		
1	Compressor	RA641A3TB-20M	Output:7.6kW×2									○	
1	Compressor	RA641A3TB-20M	Output:9.0kW×2										○
2	4-way valve coil*1	SHF	AC208-230V 60Hz	○	○	○		○	○		○	○	○
3	2-way valve coil	VPV	AC208-230V 60Hz SV3B	○	○	○	○	○	○	○	○	○	○
3	2-way valve coil	TEV	AC208-230V 60Hz SV2, 3A, 3C, 3D	○	○	○	○	○	○	○	○	○	○
3	2-way valve coil	FQ-D640	AC208-230V 60Hz SV41, 42	○	○	○	○	○	○	○	○	○	○
			AC208-230V 60Hz SV52	○*1	○*1	○*1							
4	Pulse motor valve coil	PAM	DC12V	○	○	○	○	○	○	○	○	○	○
4	Pulse motor valve coil	UKV	DC12V	○	○	○	○	○	○	○	○	○	○
5	High-presure SW	ACB-4UB154W	OFF:4.15MPa ON:3.2MPa	○	○	○	○	○	○	○	○	○	○
6	Pressure sensor(For high pressure)	NSK-BH038F-460	0.5~4.5V/0~3.92MPa	○	○	○	○	○	○	○	○	○	○
7	Pressure sensor(For low pressure)	NSK-BH010F-460	0.5~3.5V/0~0.98MPa	○	○	○	○	○	○	○	○	○	○
8	Fan motor	WDF-620A1000	DC530-620	○	○	○	○	○	○	○	○	○	○
9	Case heater(For comp.)		AC240V/29W	○	○	○	○	○	○	○	○	○	○
10	Case heater(For accum.)		AC240V/55W	○	○	○	○	○	○	○	○	○	○
11	Fusible plug		73℃	○	○	○	○	○	○	○	○	○	○

*1: Heat pump model only.

2-3. Outdoor Inverter (50/60Hz model: MMY-MAP***6*T8/7*P*)

No	Name	Model	Specification	MMY-MAP0806*	MMY-MAP1006*	MMY-MAP1206*	MMY-MAP14B6*	MMY-MAP1406*	MMY-MAP1606*	MMY-MAP18B6*	MMY-MAP1806*	MMY-MAP2006*	MMY-MAP2206*
1	Power supply terminal block	JXO-6004	AC600V/75A,4P	○	○	○	○	○	○	○	○	○	○
2	Relay terminal block for reactor	JXO-3004	AC600V/30A,4P	-	-	–	-	○	○	○	○	○	○
3	Communication terminal block	JXO-B2J	AC30V(or no more than DC42V)/1A,8P	○	○	○	○	○	○	○	○	○	○
4	Reactor(For comp. & fan)	CH-79	5.8mH/14A	○	○	○	○	-	-	-	-	-	-
5	Reactor(For comp. & fan)	CH-90	2.9mH/25A	-	-	-	-	○	○	○	-	-	-
6	Reactor(For comp. & fan)	CH-65	2.9mH/30A	-	-	-	-	-	-	-	○	○	○
7	P.C.board(Noise filter)	MCC-1608	-	○	○	○	○	○	○	○	○	○	○
8	Line filter	-	4.0mH/AC400V/35A	○	○	○	○	○	○	○	-	-	-
9	Line filter	-	0.77mH/AC480V/50A	-	-	-	-	-	-	-	○	○	○
10	P.C.board(I/F board)	MCC-1673	-	○	○	○	○	○	○	○	○	○	○
11	P.C.board(IPDU for comp.)	MCC-1669	-	○	○	○	○	○	○	○	-	-	-
12	P.C.board(IPDU for comp.)	MCC-1660	-	-	-	-	-	-	-	-	○	○	○
13	Fuse(MCC-1669)	GAC1 31.5A	31.5A/AC500V(P.C.board)	○	○	○	○	○	○	○	-	-	-
14	Fuse(MCC-1660)	GAC1 40A	40A/AC500V(P.C.board)	-	-	-	-	-	-	-	○	○	○
15	Comp.motor drive IPM	PSS25SA2FT	25A/DC1200V(P.C.board)	○	○	○	○	-	-	-	-	-	-
16	Comp.motor drive IPM	PSS50SA2FT	50A/DC1200V(P.C.board)	-	-	-	-	○	○	○	○	○	○
17	P.C.board(IPDU for fan)	MCC-1659	-	○	○	○	○	○	○	○	○	○	○
18	Fuse(MCC-1659)	HDL1 6.3A	6.3A/DC750V(P.C.board)	○	○	○	○	○	○	○	○	○	○
19	Fan motor drive IPM(MCC-1659)	PSS10S72FT	10A/DC1200V(P.C.board)	○	○	○	○	○	○	○	○	○	○
20	Magnet switch (MG-CTT) (50/60Hz)	FC-1S	AC220-240V	○	○	○	○	○	○	○	○	○	○
21	PTC thermistor	MZ32-101RMARD01E	13A/AC500V	○	○	○	○	○	○	○	○	○	○
22	Pipe temp. sensor(TD)	-	-30℃-135℃（Ambient temp. range)	○	○	○	○	○	○	○	○	○	○
23	Pipe temp. sensor(TS)	-	-20℃-80℃（Ambient temp. range)	○	○	○	○	○	○	○	○	○	○
24	Heatexchanger temp. sensor(TE)	-	-20℃-80℃（Ambient temp. range)	○	○	○	○	○	○	○	○	○	○
25	Outside temp. sensor(TO)	-	-20℃-80℃（Ambient temp. range)	○	○	○	○	○	○	○	○	○	○
26	Oil temp. sensor(TK)	-	-30℃-135℃（Ambient temp. range)	○	○	○	○	○	○	○	○	○	○
27	Liquid temp. sensor(TL)	-	-20℃-80℃（Ambient temp. range)	○	○	○	○	○	○	○	○	○	○
28	Gas temp. sensor(TG)	-	-30℃-130℃（Ambient temp. range)	-	-	-	-	○	○	○	○	○	○

2-4. Parts Layout in Outdoor Unit

8, 10, 12, 14HP

Model: MMY-MAP0806*, MAP1006*, MAP1206*, MAP14B6*

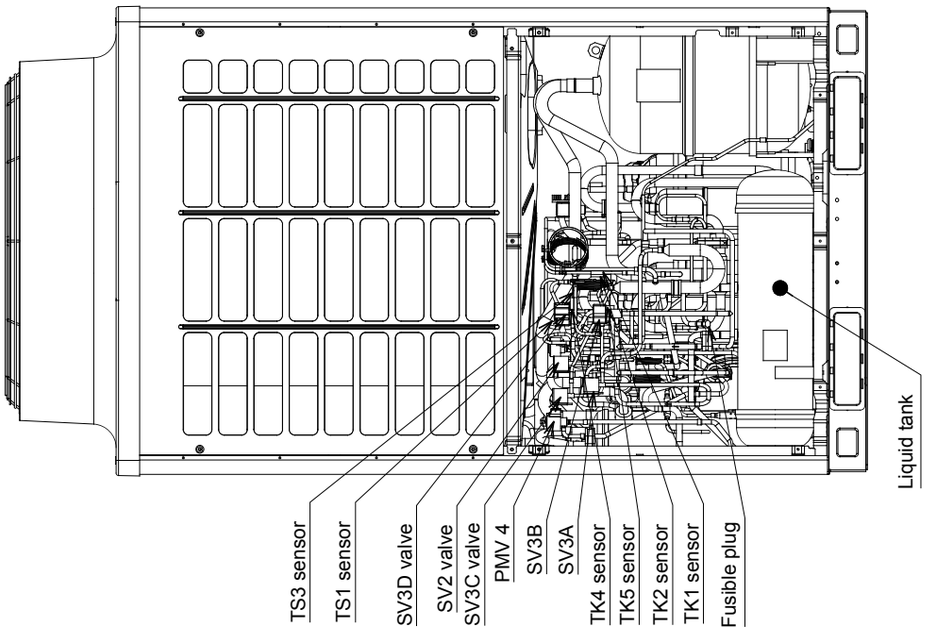

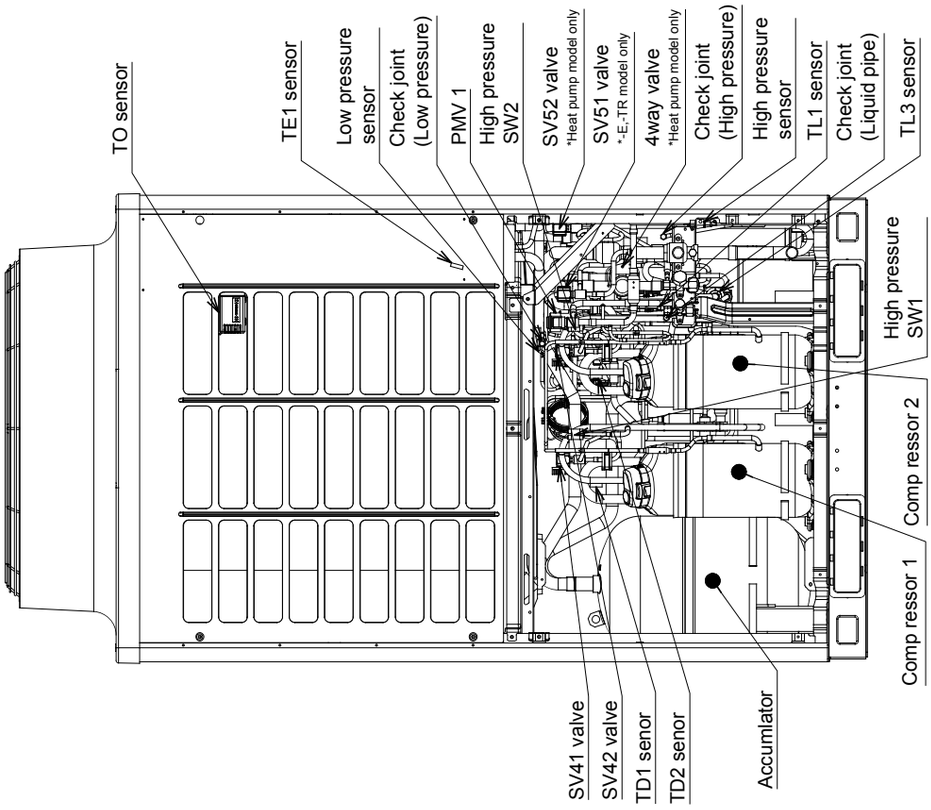

14, 16, 18HP

Model: MMY-MAP1406*, MAP1606*, MAP18B6*

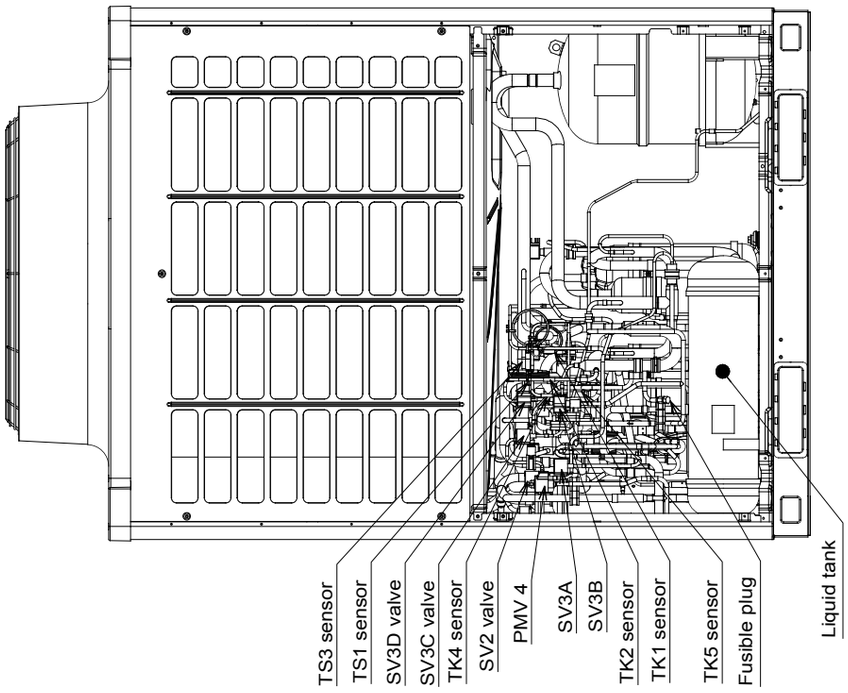

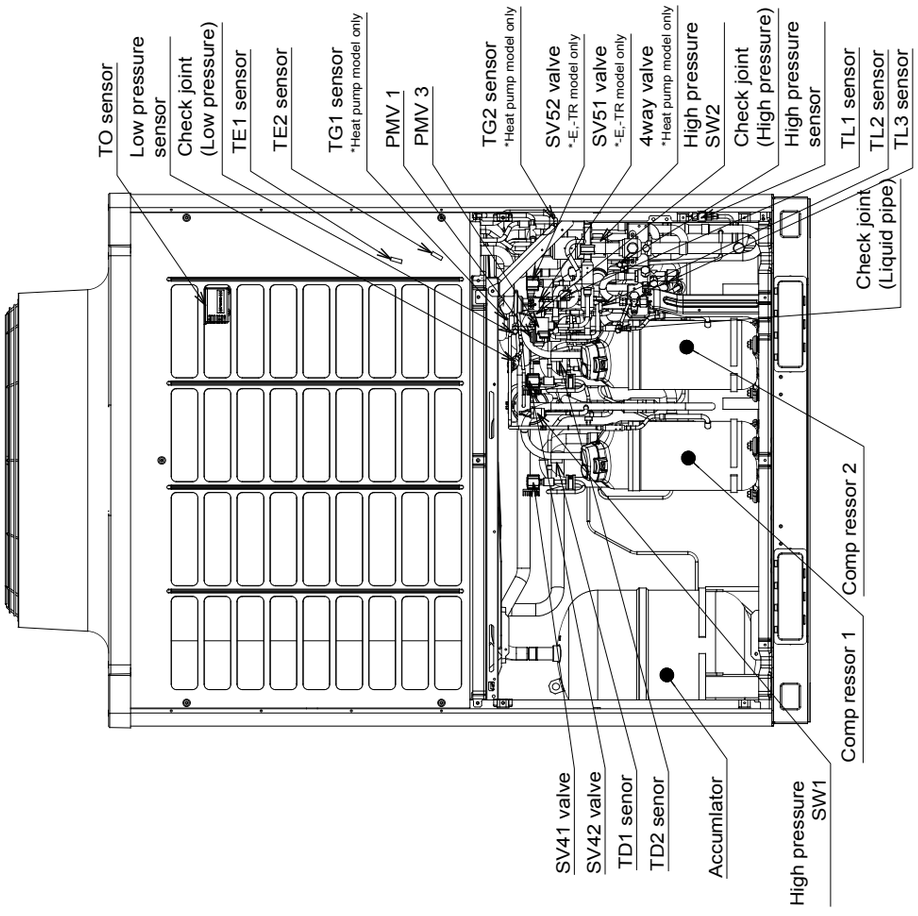

18, 20, 22HP

Model: MMY-MAP1806*, MAP2006*, MAP2206*

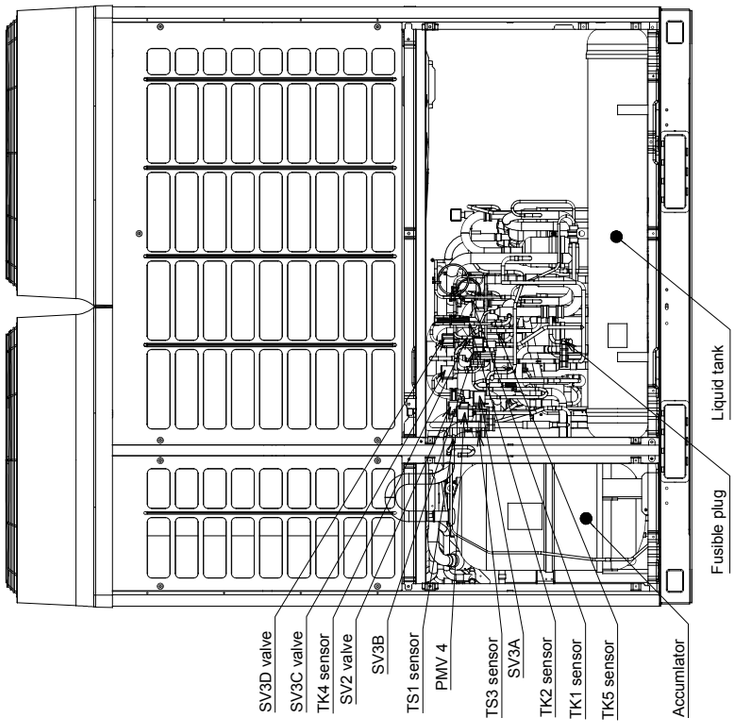

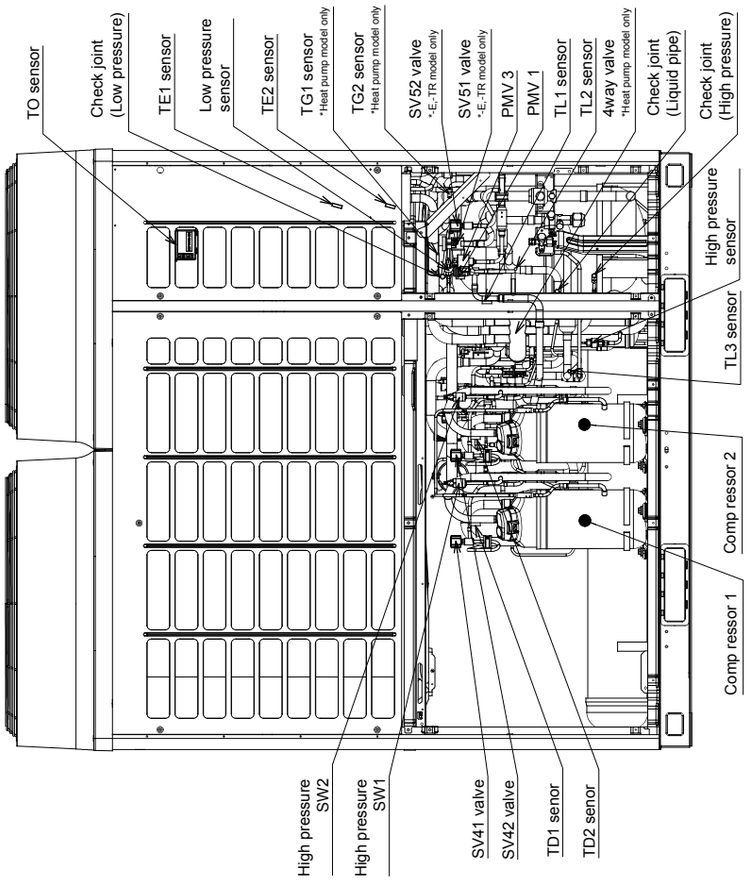

2-5. Parts Layout in Inverter Assembly

Outdoor Unit (8, 10, 12, 14HP)

Model: MMY-MAP0806*, MAP1006*, MAP1206*, MAP14B6*

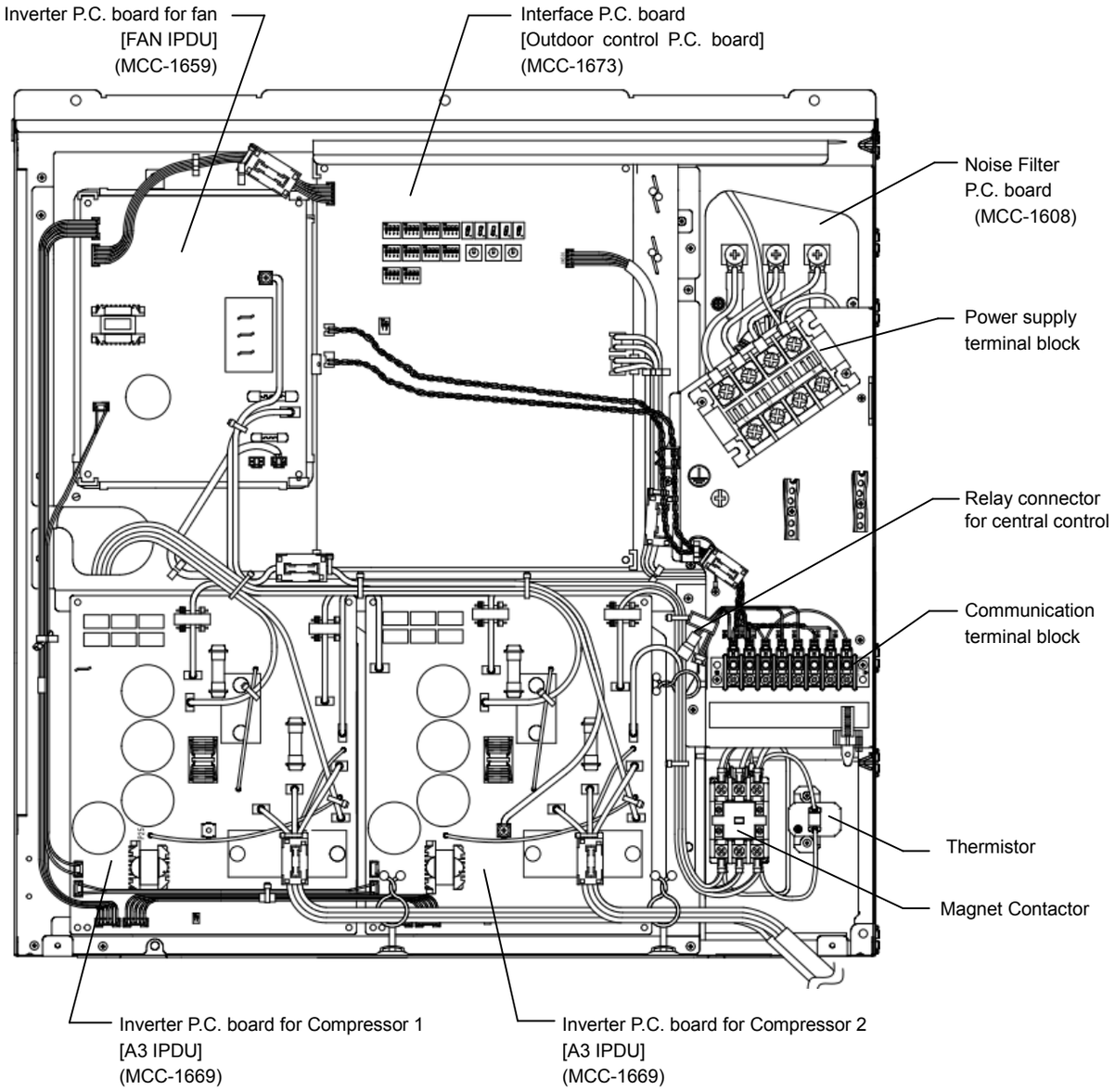

Outdoor Unit (14, 16, 18HP)
Model: MMY-MAP1406*, MAP1606*, MAP18B6*

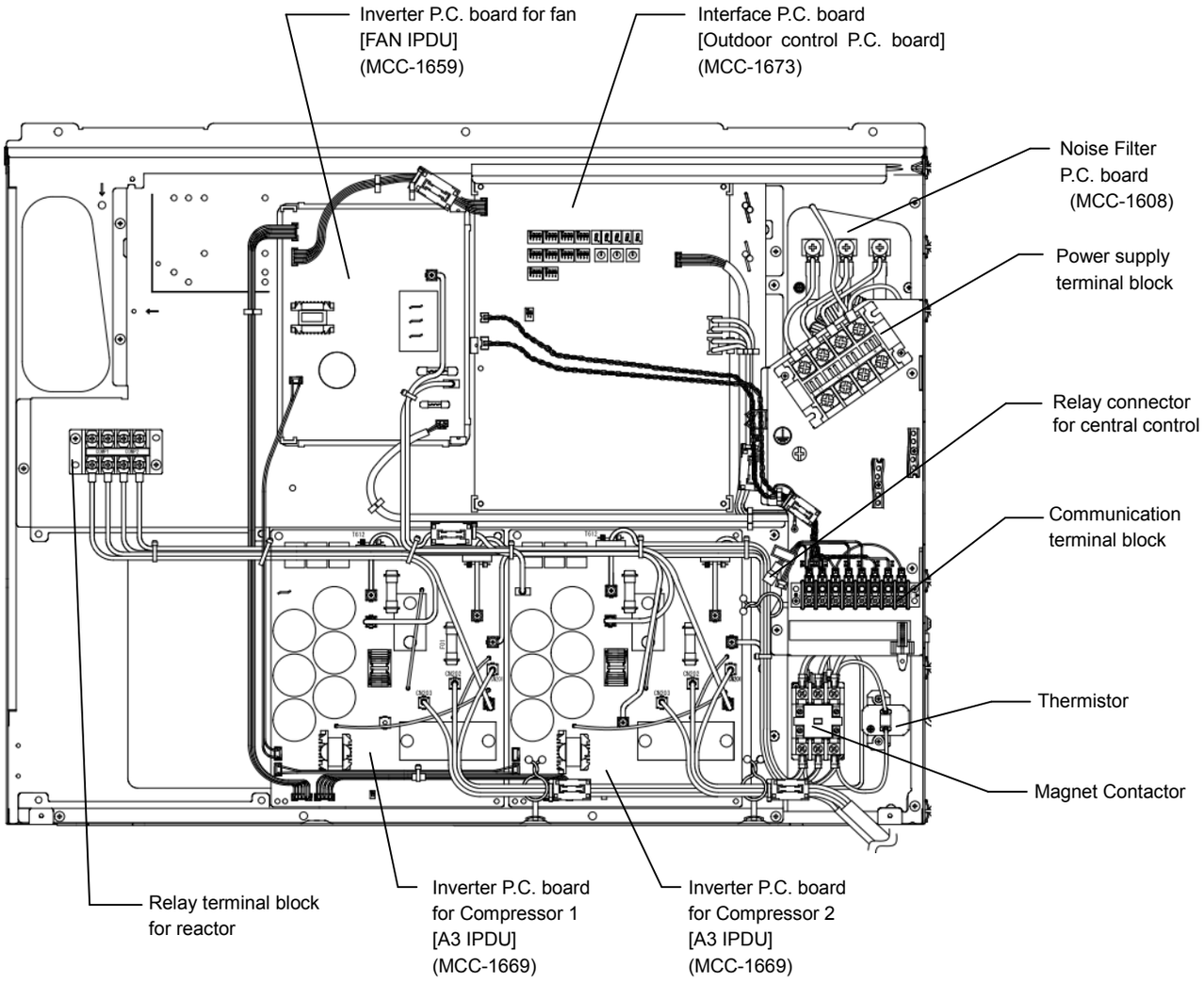

Outdoor Unit (18, 20, 22HP)

Model: MMY-MAP1806*, MAP2006*, MAP2206*

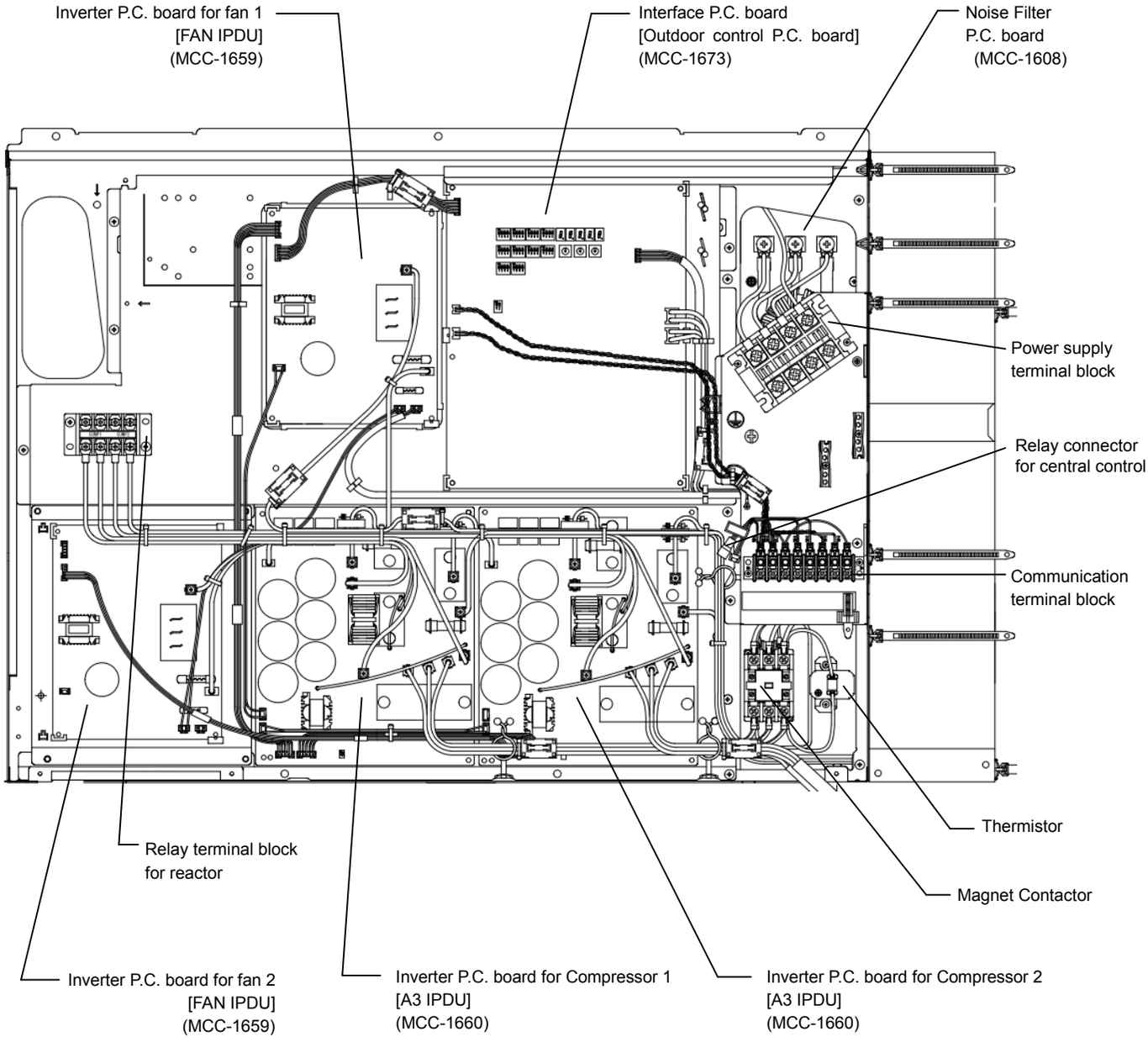

2-6. Outdoor (Inverter) Print Circuit Board

2-6-1. Interface P.C. board (MCC-1673)

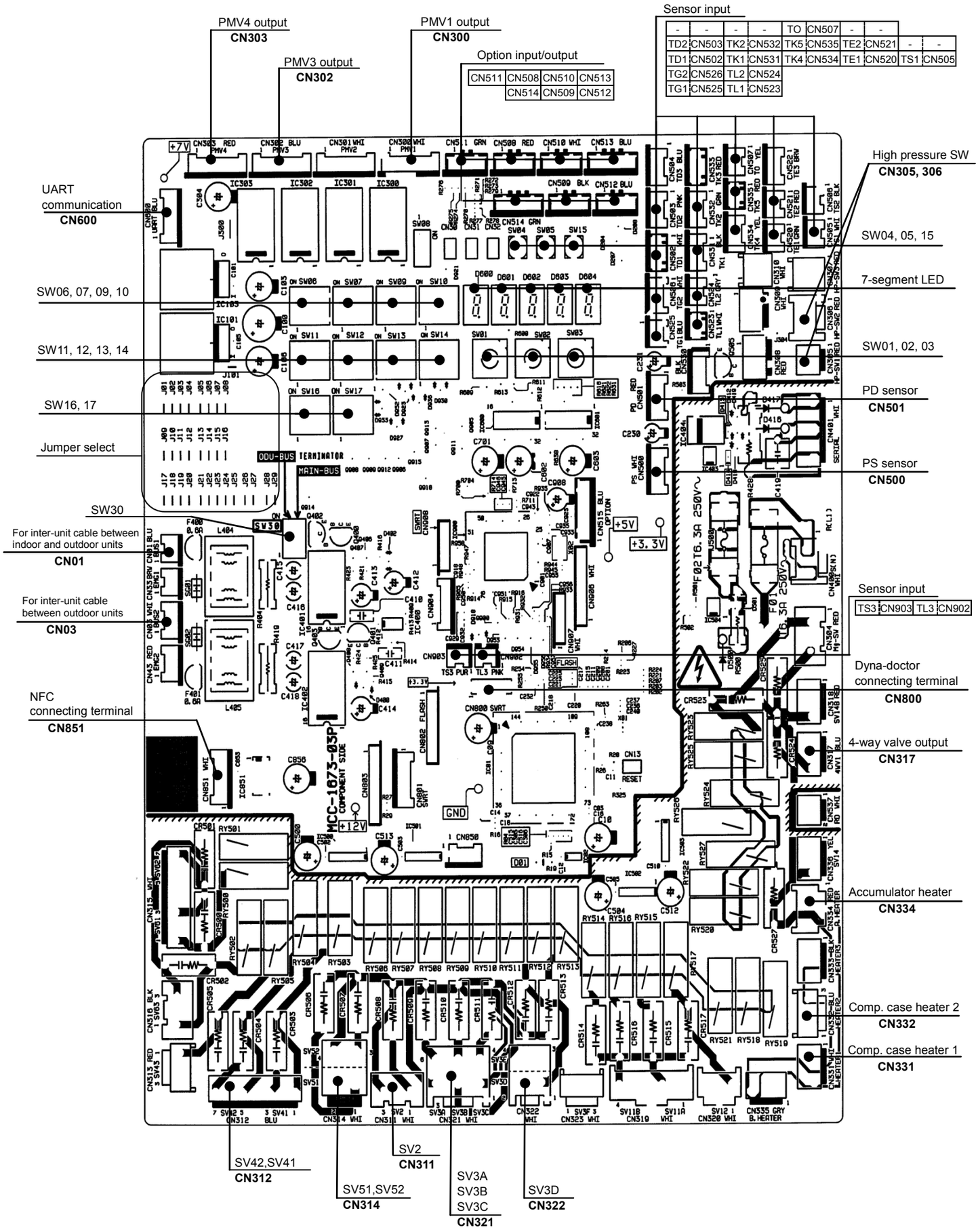

2-6-2. Inverter P.C. board for compressor (MCC-1660) A3-IPDU

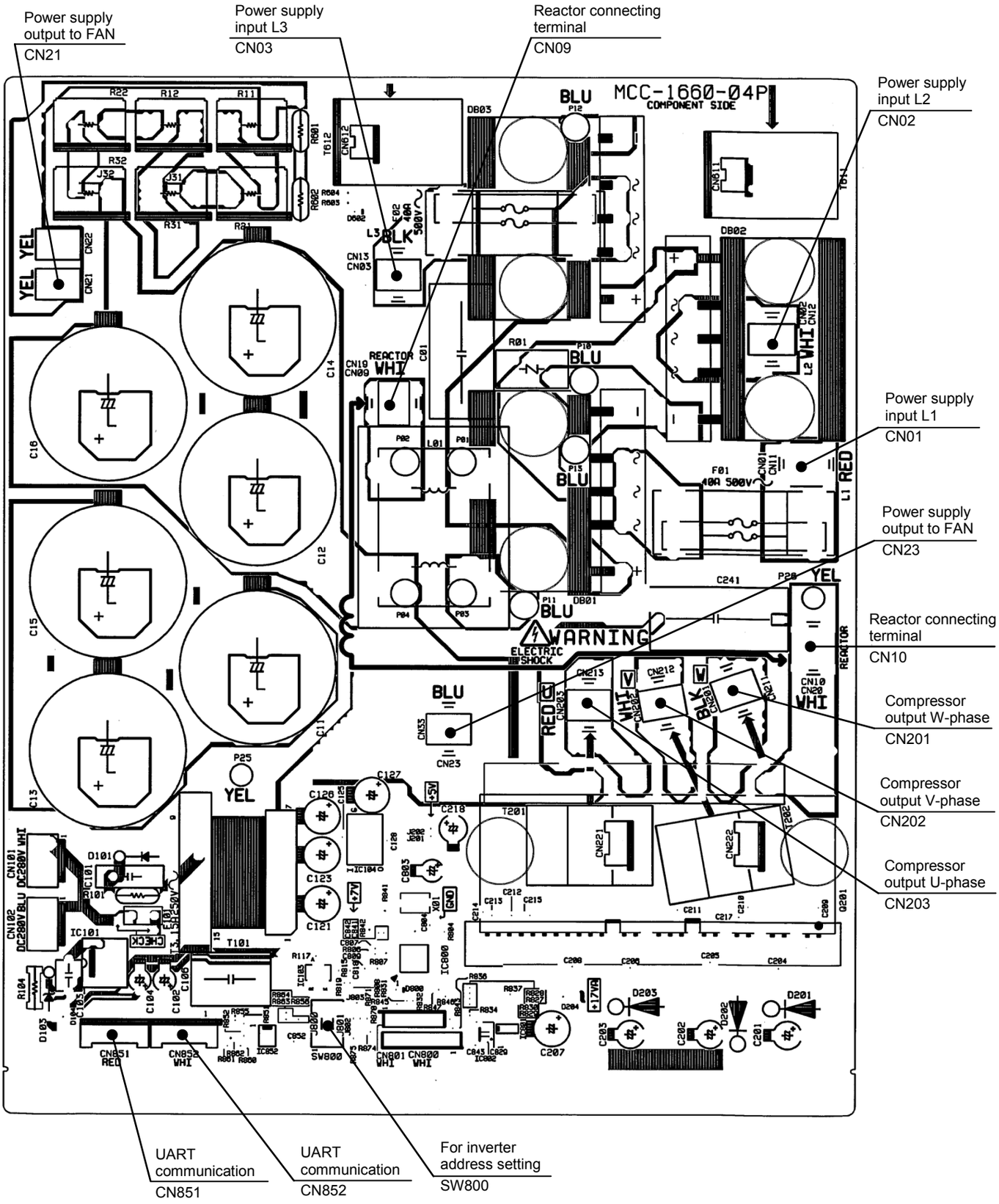

2-6-3. Inverter P.C. board for compressor (MCC-1669) A3-IPDU

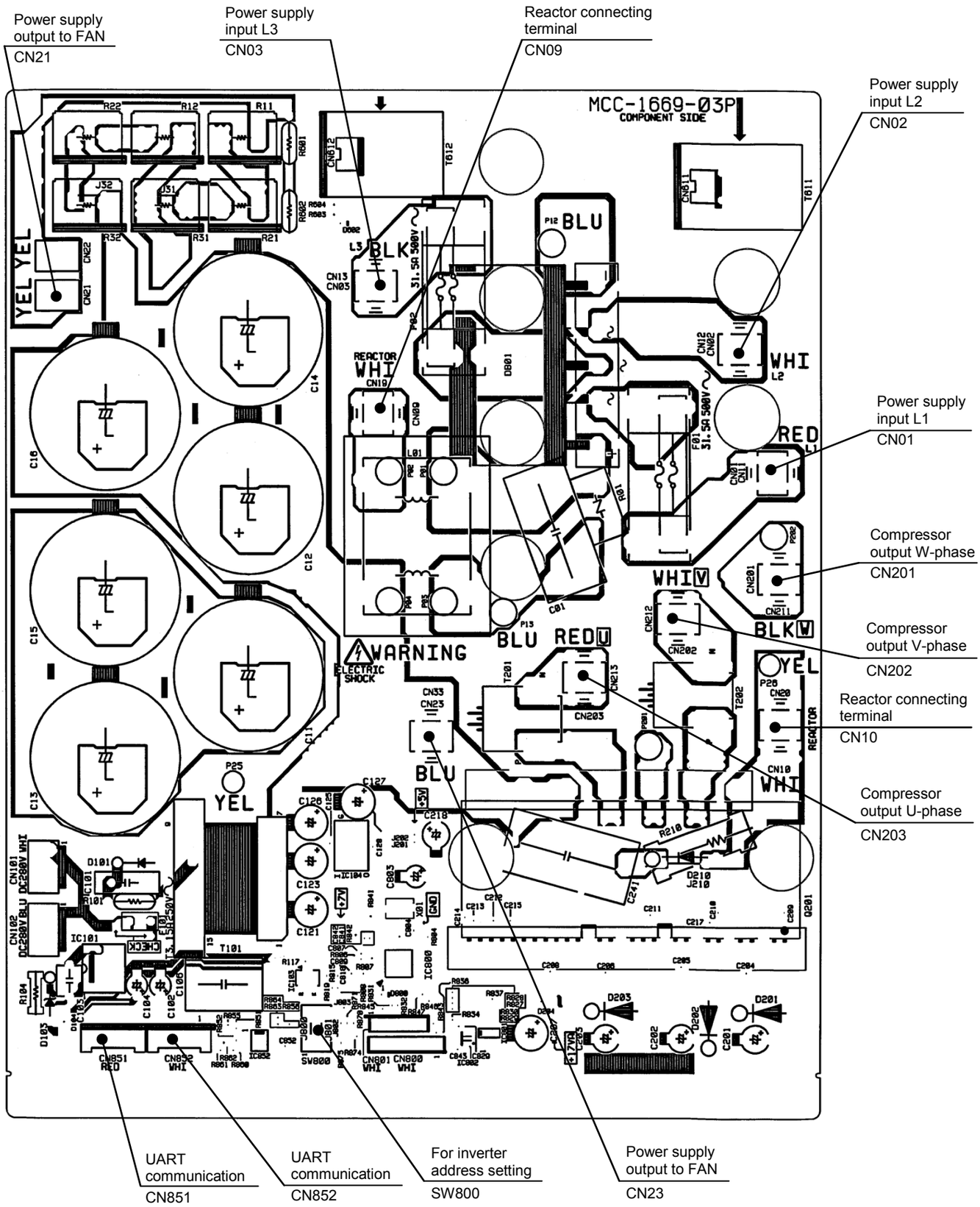

2-6-4. Inverter P.C. board for fan motor (MCC-1659) FAN-IPDU

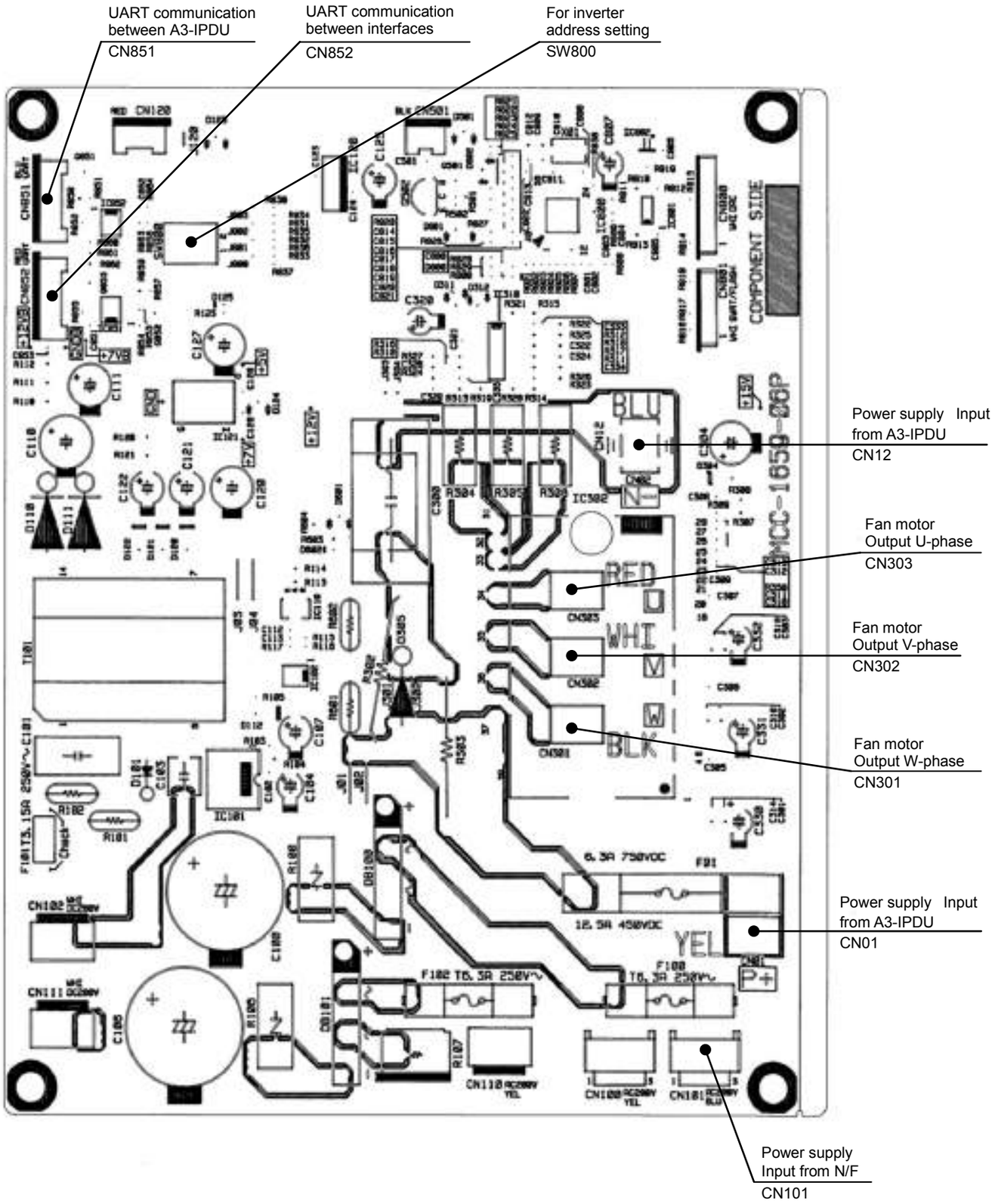

2-6-5. Noise Filter PC board (MCC-1608 -A, -B)

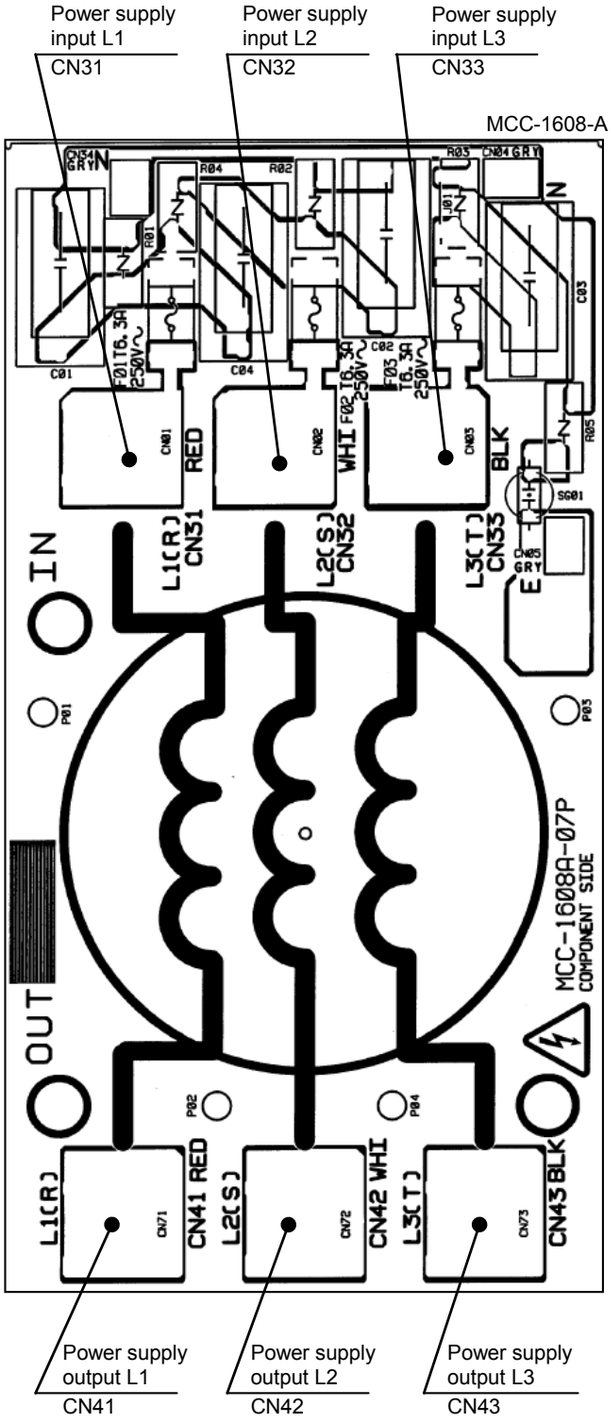

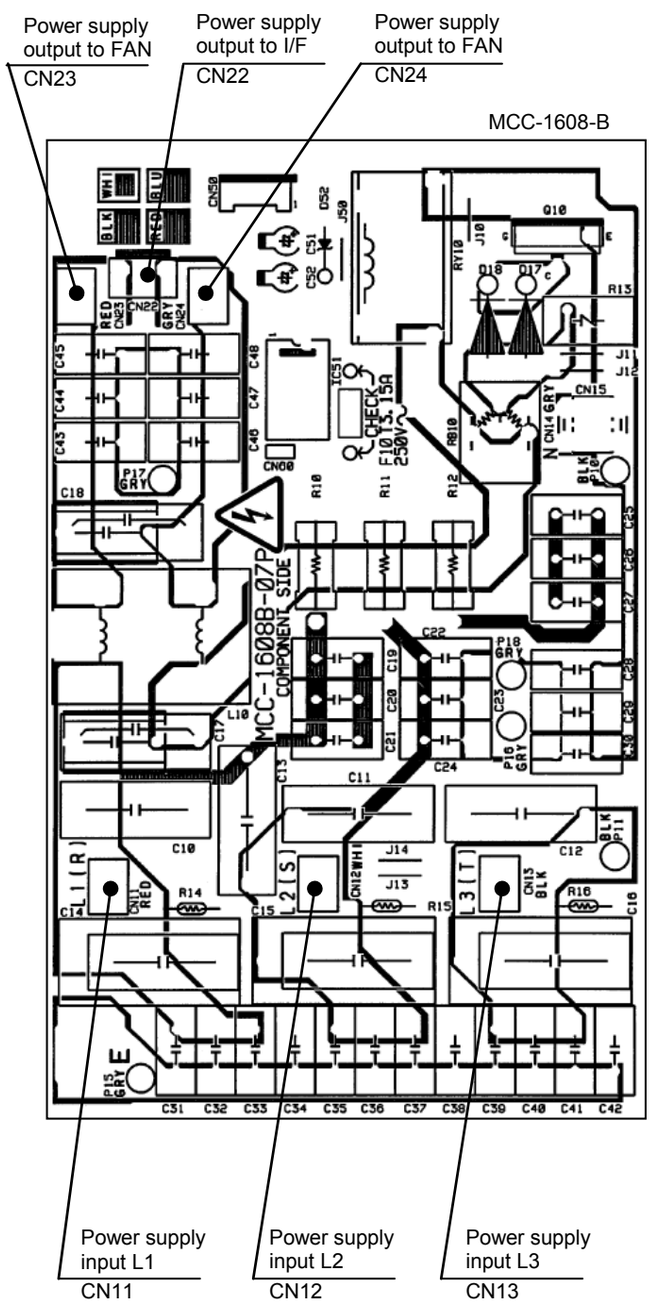

3 Refrigerant Piping Systematic Drawing

Outdoor Unit (8, 10, 12HP)
Model: MMY-MAP0806∗, MMY-MAP1006∗, MMY-MAP1206∗

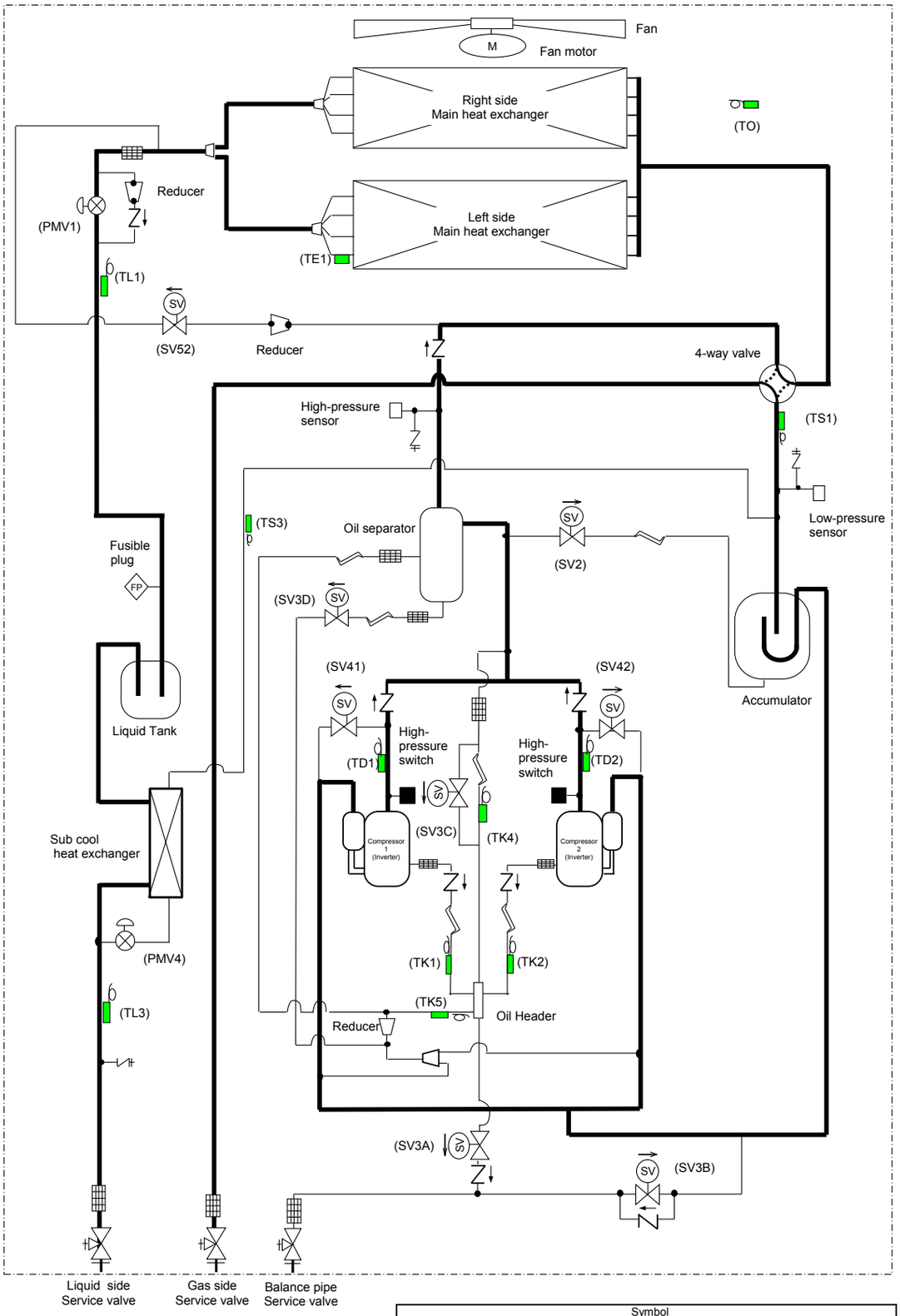

Symbol						
Solenoid valve	Capillary tube	Check valve	Check joint	Strainer	Temperature sensor	Distributor

Outdoor Unit (14, 16HP)
Model: MMY-MAP1406*, MMY-MAP1606*

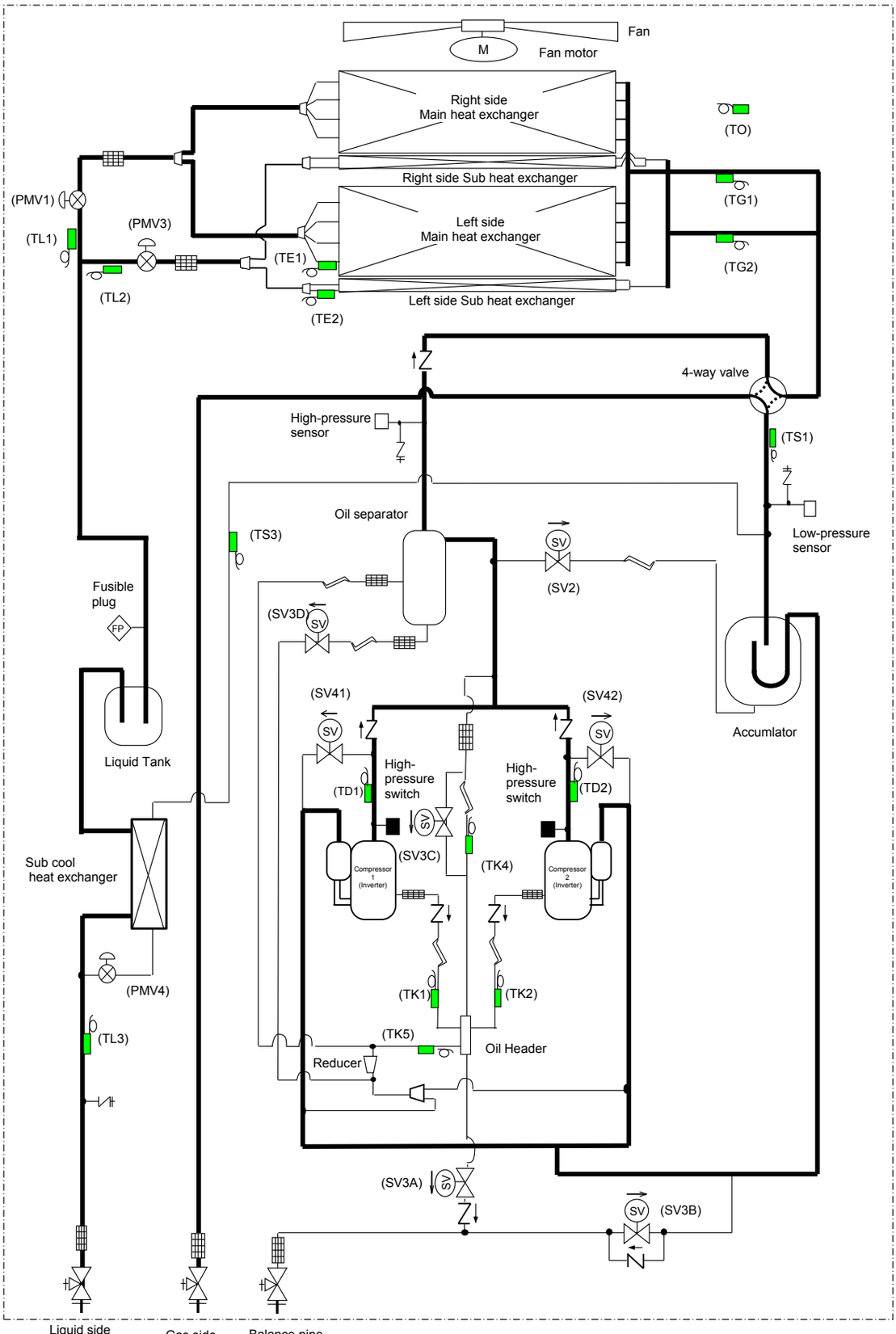

Symbol						
Solenoid valve	Capillary tube	Check valve	Check joint	Strainer	Temperature sensor	Distributor

Outdoor Unit (18, 20, 22HP)
Model: MMY-MAP1806∗ , MMY-MAP2006∗ , MMY-MAP2206∗

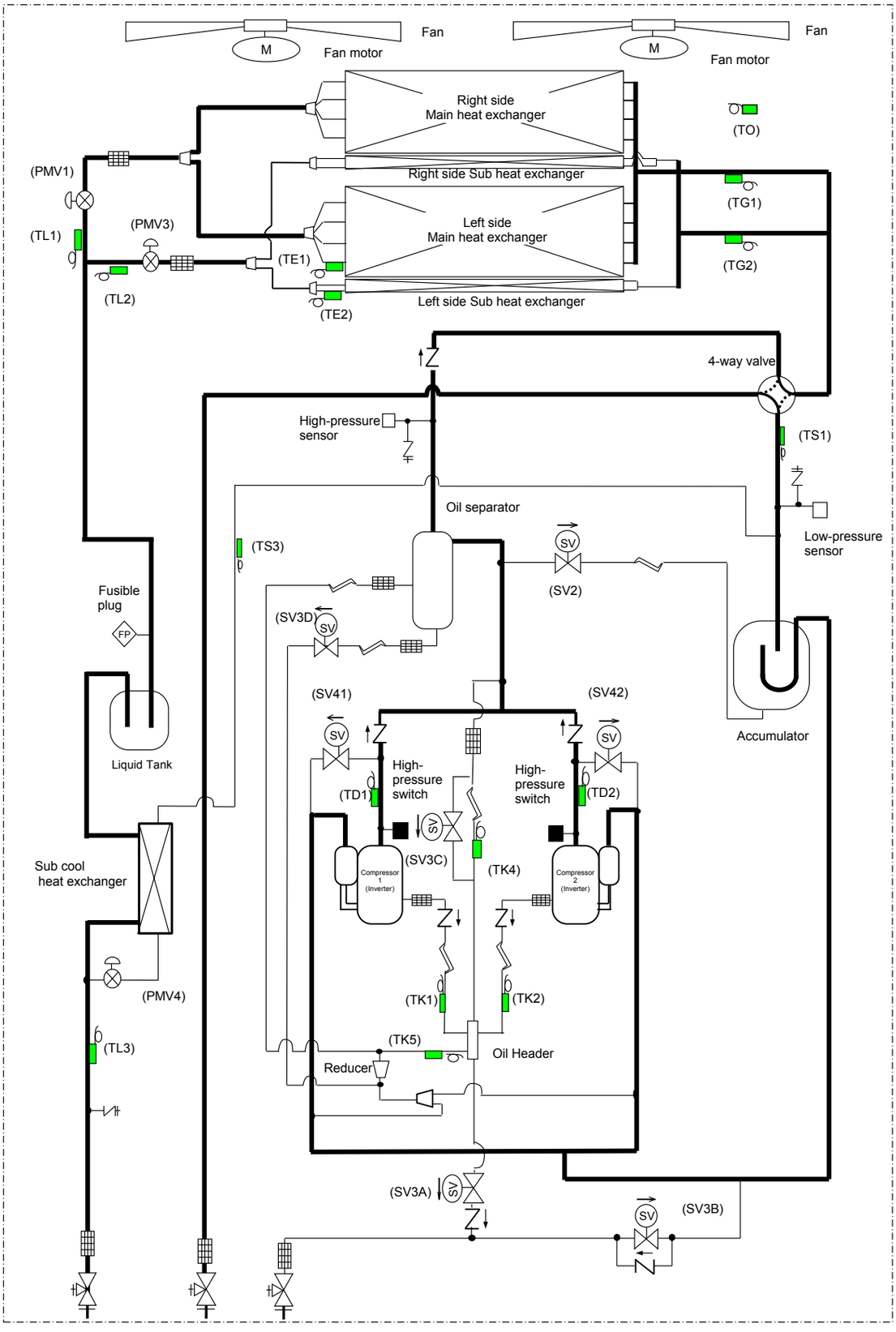

Symbol						
Solenoid valve	Capillary tube	Check valve	Check joint	Strainer	Temperature sensor	Distributor

Outdoor Unit (8, 10, 12HP)
Model: MMY-MAP0806*-E/TR, MMY-MAP1006*-E/TR, MMY-MAP1206*-E/TR

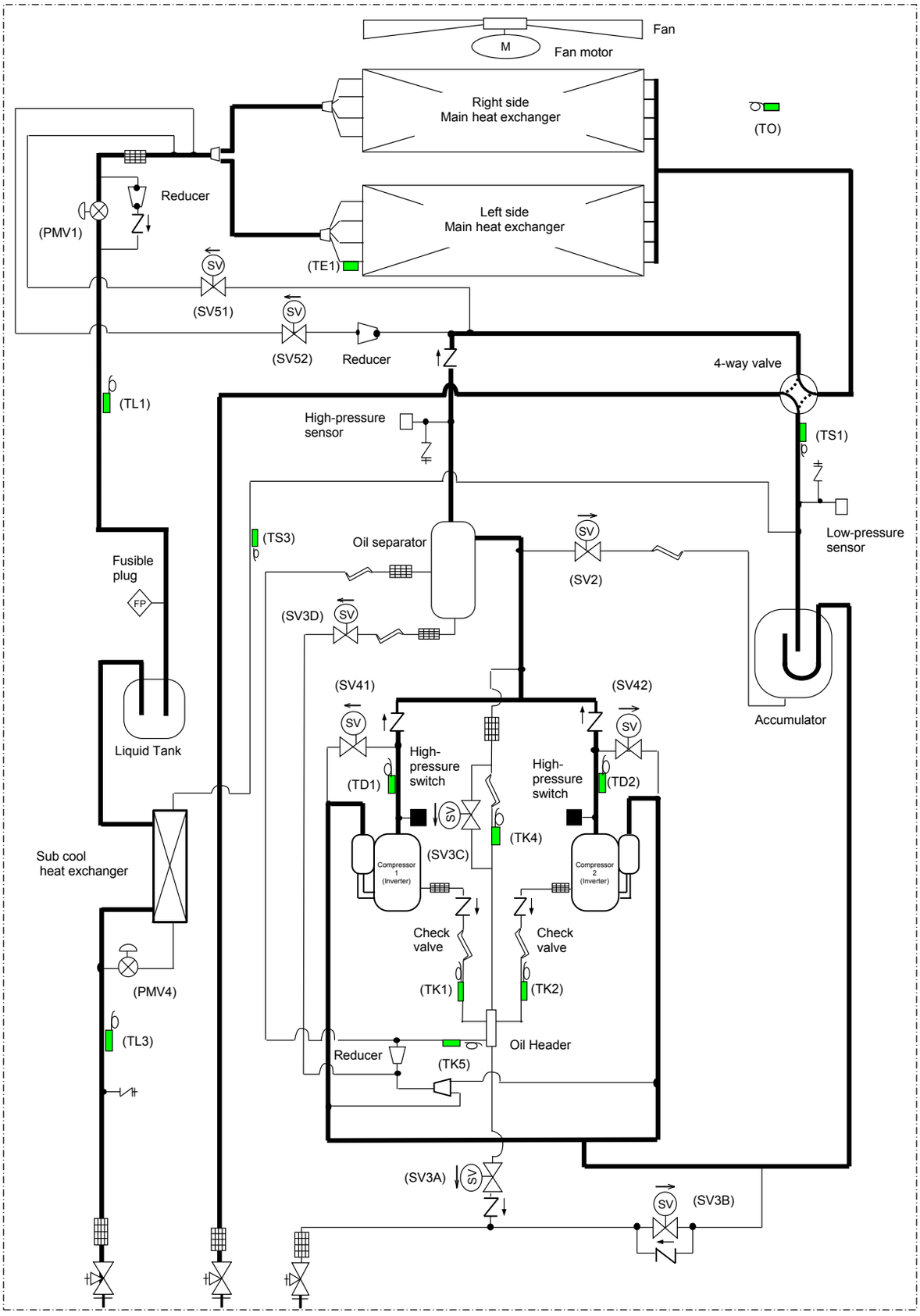

Symbol						
Solenoid valve	Capillary tube	Check valve	Check joint	Strainer	Temperature sensor	Distributor

Outdoor Unit (14, 16HP)
Model: MMY-MAP1406*-E/TR, MMY-MAP1606*-E/TR

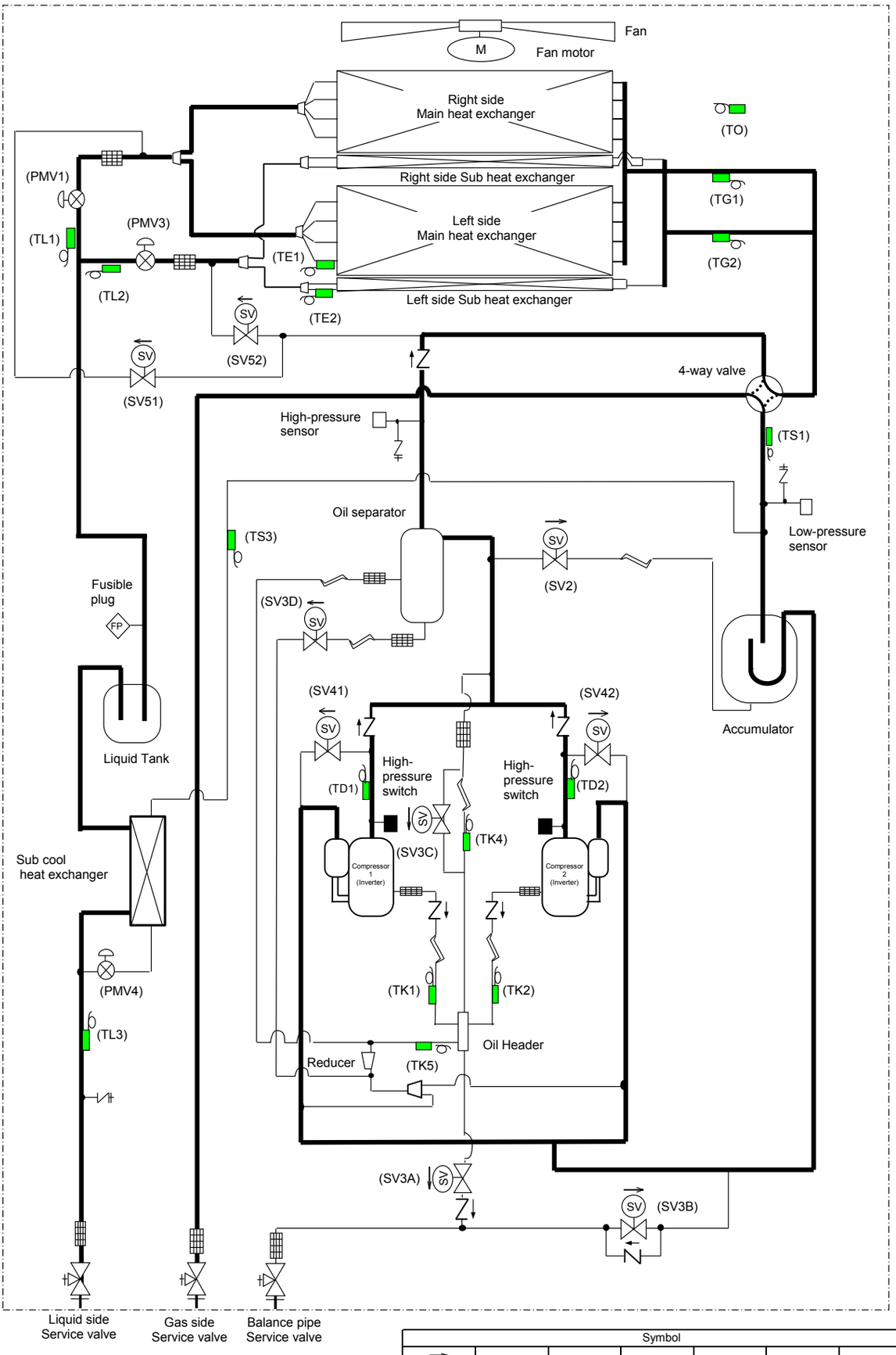

Symbol						
Solenoid valve	Capillary tube	Check valve	Check joint	Strainer	Temperature sensor	Distributor

Outdoor Unit (18, 20, 22HP)
Model: MMY-MAP1806*-E/TR, MMY-MAP2006*-E/TR, MMY-MAP2206*-E/TR

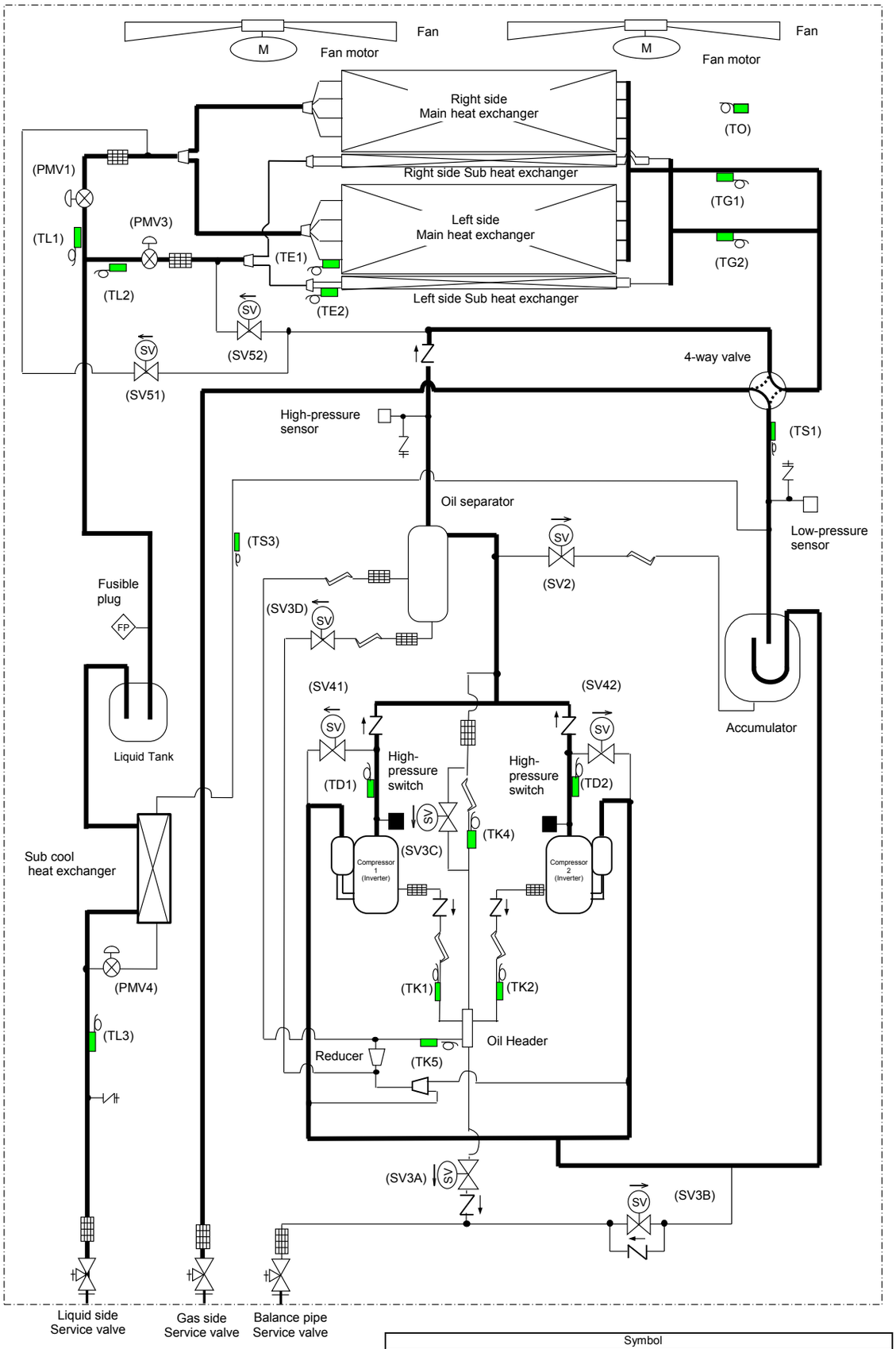

Symbol						
Solenoid valve	Capillary tube	Check valve	Check joint	Strainer	Temperature sensor	Distributor

Outdoor Unit (8, 10, 12, 14HP)
Model: MMY-MAP0806T8/7(J)P*, MMY-MAP1006T8/7(J)P*, MMY-MAP1206T8/7(J)P*
MMY-MAP14B6T8/7(J)P*

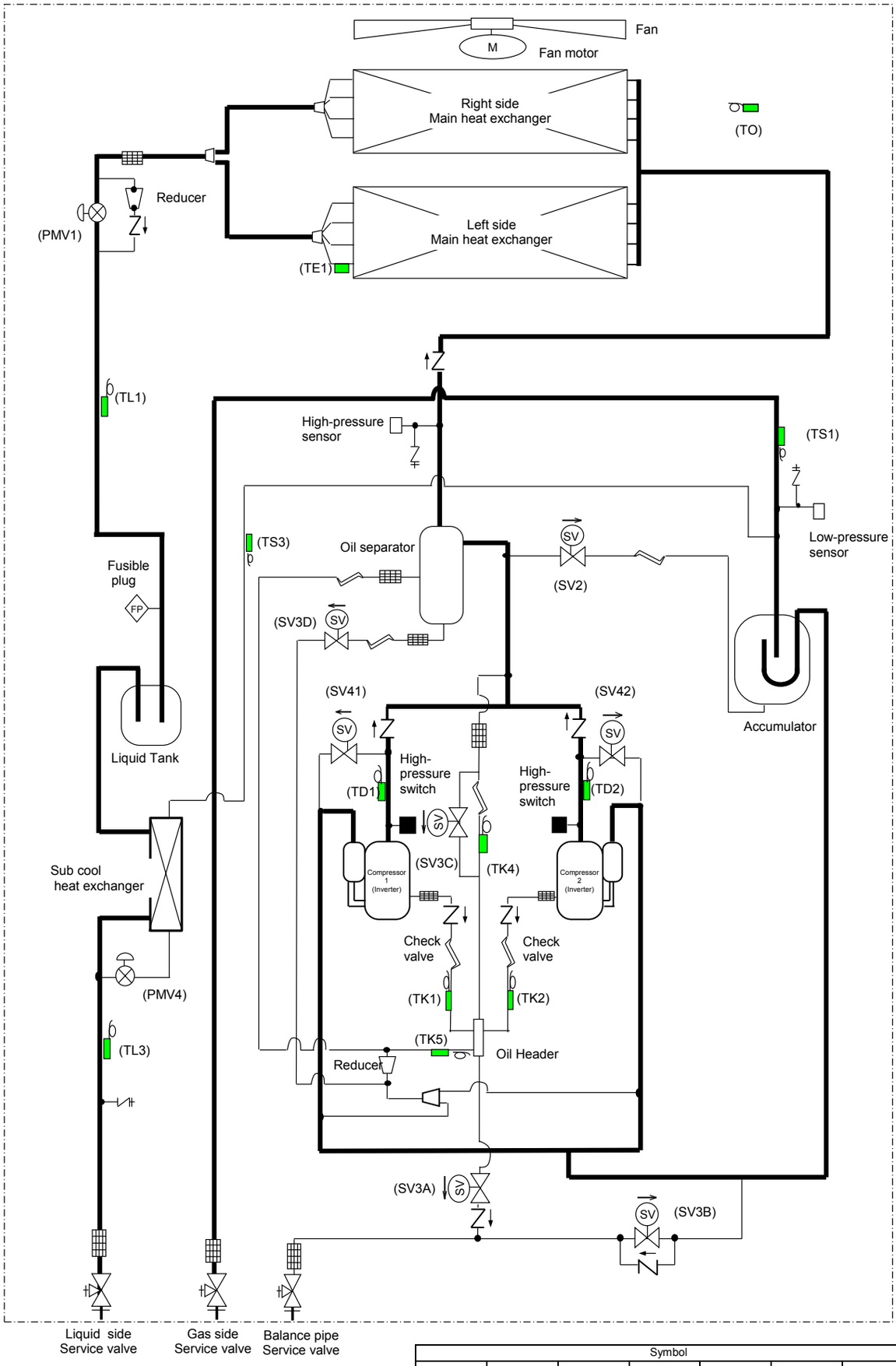

Symbol						
Solenoid valve	Capillary tube	Check valve	Check joint	Strainer	Temperature sensor	Distributor

Outdoor Unit (14, 16, 18HP)
Model: MMY-MAP1406T8/7(J)P*, MMY-MAP1606T8/7(J)P*
MMY-MAP18B6T8/7(J)P*

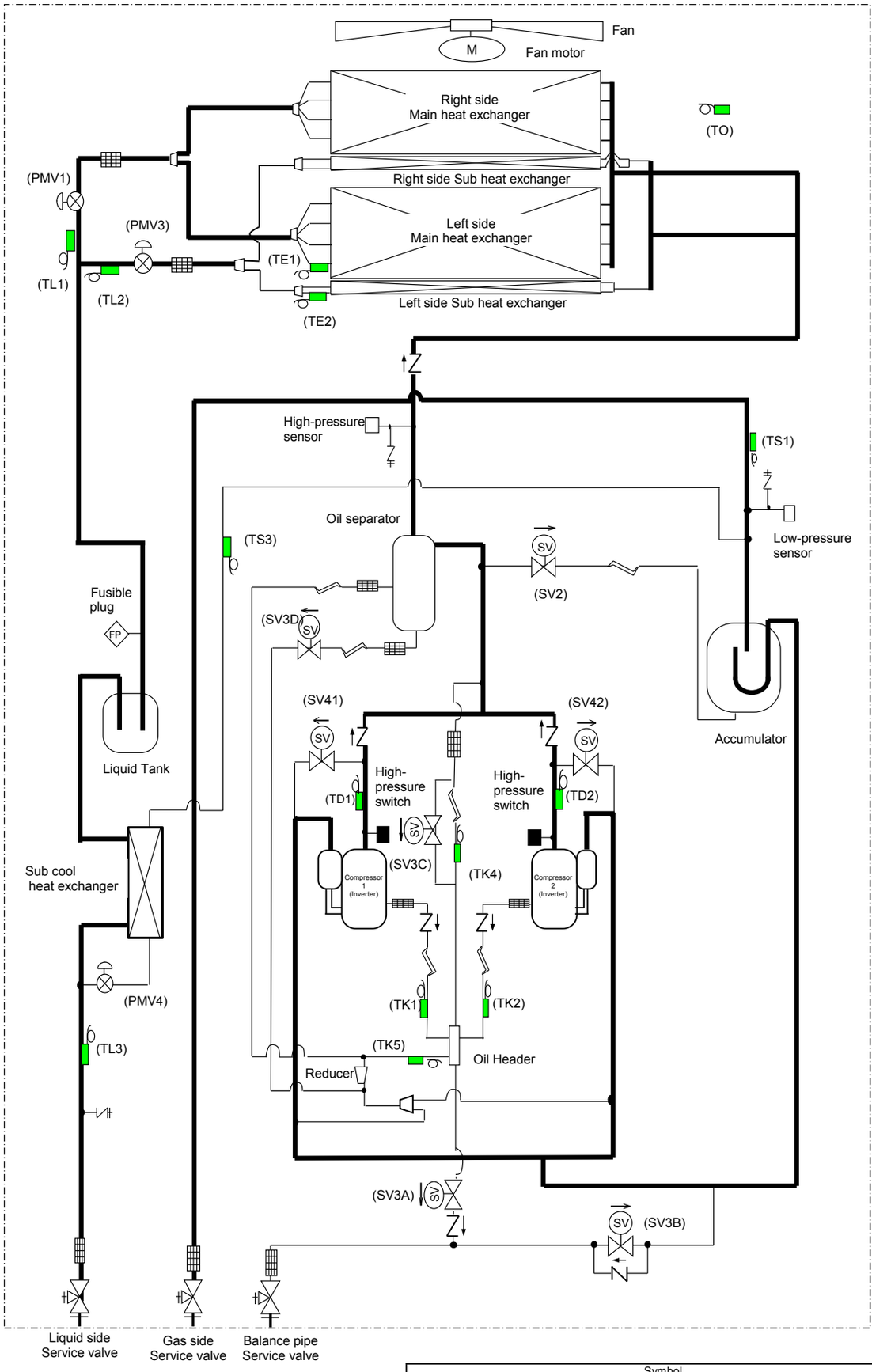

Symbol						
Solenoid valve	Capillary tube	Check valve	Check joint	Strainer	Temperature sensor	Distributor

Outdoor Unit (18, 20, 22HP)
Model: MMY-MAP1806T8/7(J)P*, MMY-MAP2006T8/7(J)P*, MMY-MAP2206T8/7(J)P*

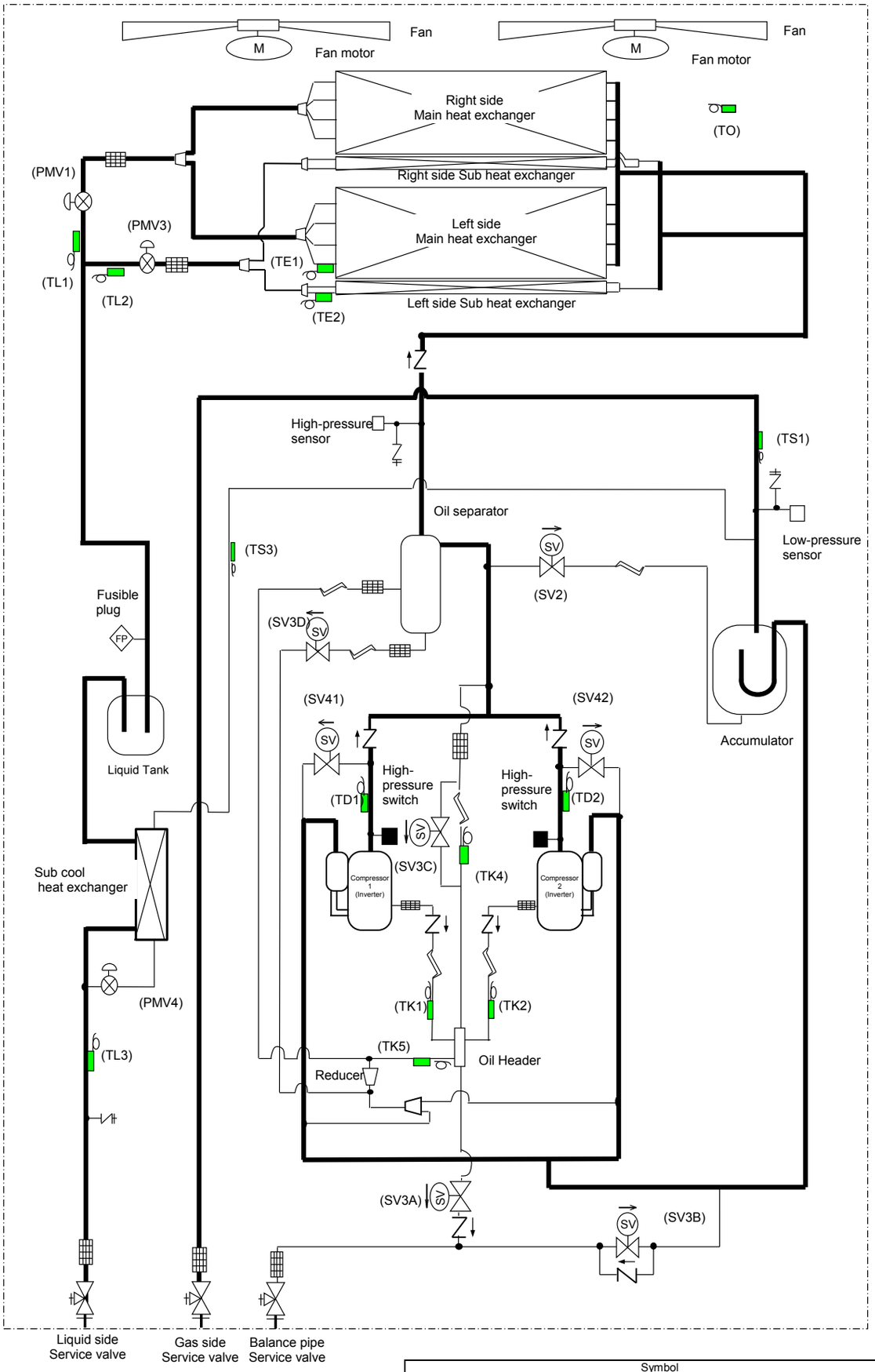

Symbol						
Solenoid valve	Capillary tube	Check valve	Check joint	Strainer	Temperature sensor	Distributor

Explanation of Functional Parts

Functional part name		Functional outline
Solenoid valve	SV2	(Hot gas bypass) (Connector CN311: White) 1) Low pressure release function 2) High pressure release function 3) Gas balance function during stop time
	SV3A	(Connector CN321: White) 1) Supplies oil reserved in the oil header during ON time.
	SV3B	(Connector CN321: White) 1) Returns oil supplied in the balance pipe to the compressor.
	SV3C	(Connector CN321: White) 1) Pressurizes oil reserved in the oil header during ON time.
	SV3D	(Connector CN322: White) 1) Reserves oil in the oil separator during OFF time. 2) Returns oil reserved in the oil separator to the compressor during ON time.
	SV41 SV42	(Start assure valve of compressor) (SV41 Connector CN312: Blue, SV42 Connector CN312: Blue. 1) For gas balance start 2) High pressure release function 3) Low pressure release function
	SV51	(Connector CN314: White) 1) Gas injection function during hot gas defrost in heating operation
	SV52	(Connector CN314: White) 1) Preventive function for high-pressure rising in heating operation 2) Gas injection function during hot fas defrost in heating operation
4-way valve		(Connector CN317:Blue) 1) Cooling/heating exchange 2) Reverse defrost
Pulese motor valve	PMV1, 3	(PMV1 Connector CN300: White, PMV3 Connector CN302: Blue) 1) Super heat control function in heating operation 2) Liquid line shut-down function while follower unit stops 3) Subcool adjustment function in cooling operation 4) Exchange function between main and sub exchangers in cooling operation
	PMV4	(Connector CN303: Red) 1) Subcool adjustment function in cooling operation 2) Liquid bypass function for discharge temperature release (cooling bypass function)
Oil separator		1) Prevention for rapid decreasing of oil (Decreases oil flowing to the cycle) 2) Reserve function of surplus oil
Temp. Sensor	TD1 TD2	(TD1 Connector CN502: White, TD2 Connector CN503: Pink) 1) Protection of compressor discharge temp. 2) Used for dischage temperature release
	TS1	(Connector CN505: White) 1) Controls PMV1 super heat in heating operation 2) Protection of compressor
	TS3	(Connector CN903: Purple) 1) Controls PMV4 super heat in heating operation
	TG1 TG2	(TG1 Connector CN525: Blue, TG2 Connector CN526: White) 1) Controls PMV1 super heat in heating operation
	TE1 TE2	(TE1 Connector CN520: Green, TE2 Connector CN521: Red) 1) Controls defrost in heating operation 2) Controls outdoor fan in heating operation
	TK1,TK2 TK4,TK5	(TK1 Connector CN531: Black, TK2 Connector CN532: Green, TK4 Connector CN534: Yellow, TK5 Connector CN535: Red) 1) Judges oil level of the compressor
	TL1,TL2 TL3	(TL1 Connector CN523: White, TL2 Connector CN524: Gray, TL3 Connector CN902: Pink) 1) Detects subcool in cooling operation
	TO	(Connector CN507: Yellow) 1) Detects outside temperature
Pressure sensor	High pressure sensor	(Connector CN501: Red) 1) Detects high pressure and controls compressor capacity 2) Detects high pressure in cooling operation, and controls the fan in low ambient cooling operation 3) Detects subcool in indoor unit in heating operation
	Low pressure sensor	(Connector CN500: White) 1) Detects low pressure in cooling operation and controls compressor capacity 2) Detects low pressure in heating operation, and controls the super heat
Heater	Compressor case heater	(Compressor 1 Connector CN331: White, Compressor 2 Connector CN332: Blue. 1) Prevents liquid accumulation to compressor
	Accumulator case heater	(Connector CN334: Red) 1) Prevents liquid accumulation to accumulator
Balance pipe		1) Oil balancing in each outdoor unit
High pressure switch (4.15MPa)	High pressure SW 1 High pressure SW 2	(High pressure SW 1,2 Connector CN251: BLK) 1) Piping resisting pressure protection

Indoor Unit

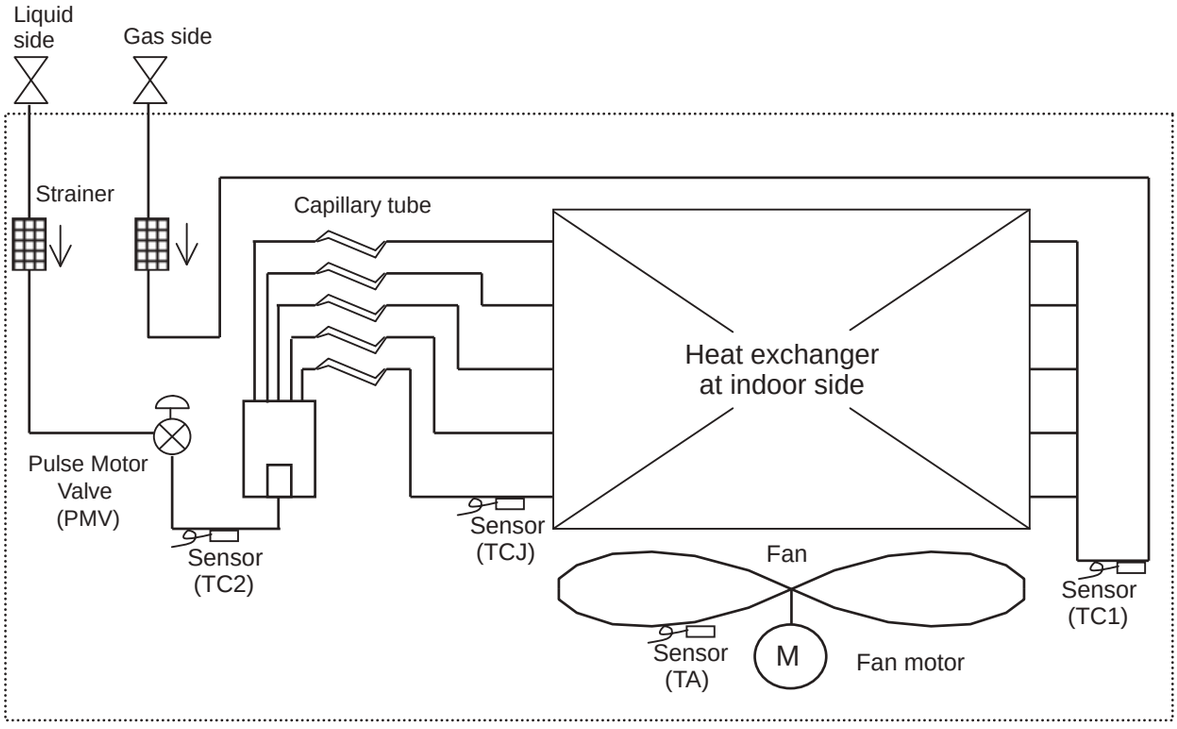

⚠ CAUTION

MMU-AP007YH, AP012YH type air conditioners have no TC2 sensor.

Explanation of functional parts in indoor unit

Functional part name		Functional outline
Pulse Motor Valve	PMV	(Connector CN082 (6P): Blue) 1) Controls super heat in cooling operation 2) Controls subcool in heating operation 3) Recovers refrigerant oil in cooling operation 4) Recovers refrigerant oil in heating operation
Temp. Sensor	1.TA	(Connector CN104 (2P): Yellow) 1) Detects indoor suction temperature
	2.TC1	(Connector CN100 (3P): Brown) 1) Controls PMV super heat in cooling operation
	3.TC2	(Connector CN101 (2P): Black) 1) Controls PMV subcool in heating operation
	4.TCJ	(Connector CN102 (2P): Red) 1) Controls PMV super heat in cooling operation 2) [MMU-AP007YH to AP012YH only] Controls PMV subcool in heating operation

4 Combined Refrigerant Piping System Schematic Diagrams

4-1. Normal Operation (COOL Mode / DEFROST Mode) - High Outside Air Temperature (Roughly 20°C or Above)

Header unit (MMY-MAP1606HT*) **Follower unit (MMY-MAP1206HT*)**

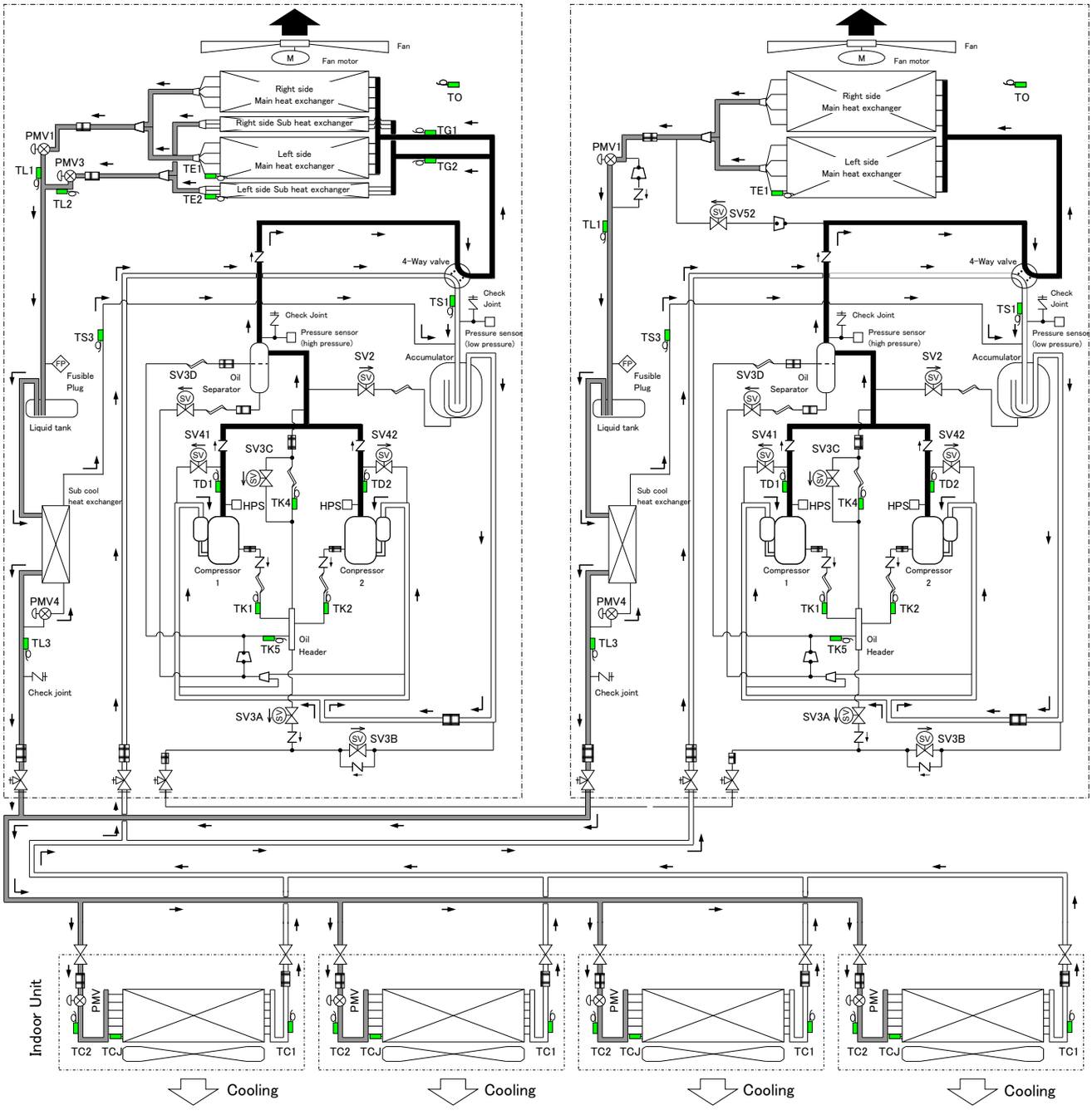

Outdoor Unit			
4-Way valve	OFF	SV3A	Control
SV4(n)	OFF(*1)	SV3B	Control
SV52	Control	SV3C	Control
PMV1	Control	SV3D	Control
PMV3	Control	Outdoor fan	Control
PMV4	Control		

High-pressure gas refrigerant
Condensed liquid refrigerant
Evaporative gas refrigerant (Low pressure)
Low-pressure circuit (Refrigerant recovery line)

(28 HP system described in the example of (16 HP + 12 HP))

(*1) SV4 (n) of stopped compressor (n)=ON

(*2) It may be controlled.

The outdoor unit which communication line between indoor and outdoor is connected is the "Header unit". Other outdoor units are called "Follower units".

4-2. Normal Operation (COOL Mode) - Low Outside Air Temperature (Roughly Below 20°C)

Header unit (MMY-MAP1606HT*)

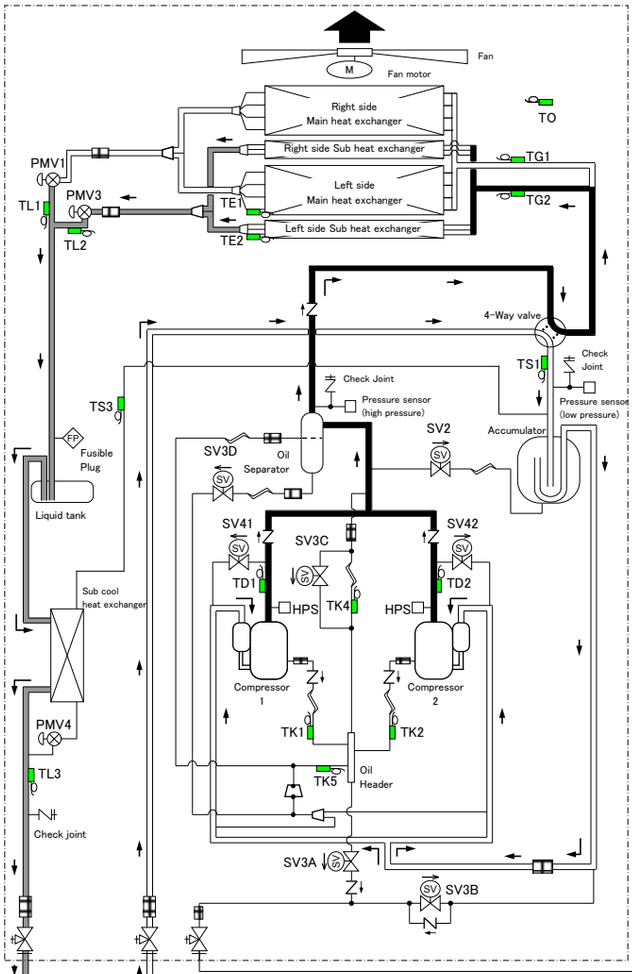

Follower unit (MMY-MAP1206HT*)

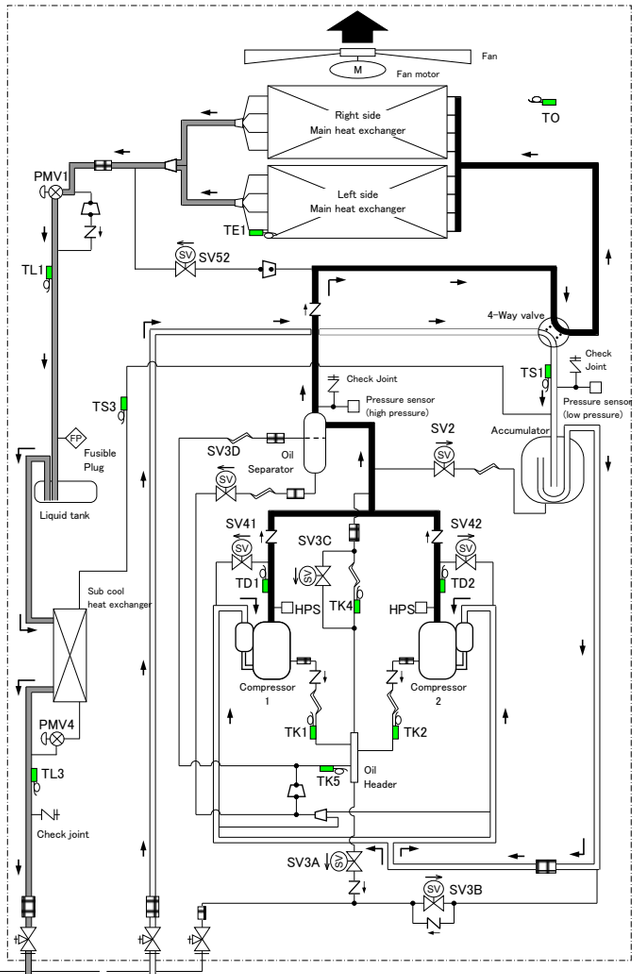

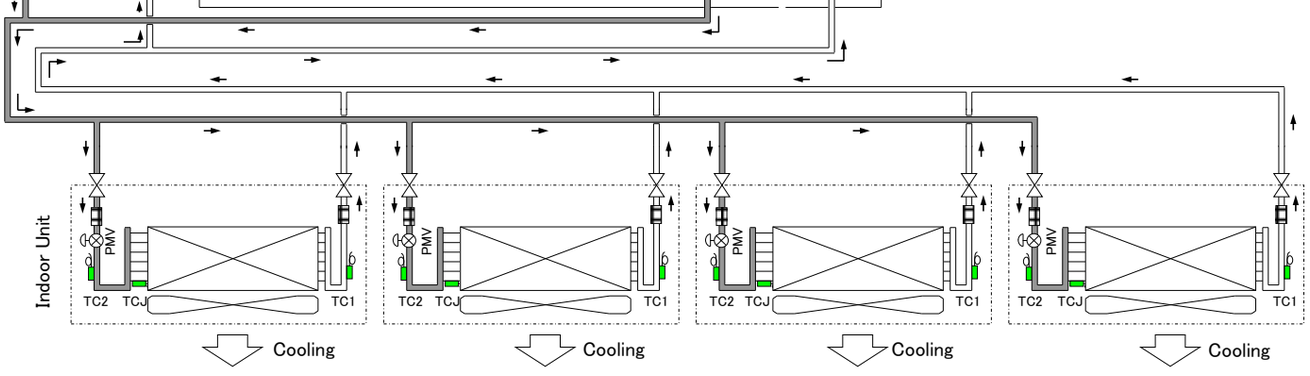

Outdoor Unit			
4-Way valve	OFF	SV3A	Control
SV4(n)	OFF(*1)	SV3B	Control
SV52	OFF	SV3C	Control
PMV1	Close(*2)	SV3D	Control
PMV3	Control	Outdoor fan	Control
PMV4	Close(*2)		

High-pressure gas refrigerant
Evaporative gas refrigerant (Low pressure)
Condensed liquid refrigerant
Low-pressure circuit (Refrigerant recovery line)

(28 HP system described in the example of (16 HP + 12 HP))

(*1) SV4 (n) of stopped compressor (n)=ON

(*2) It may be controlled.

The outdoor unit which communication line between indoor and outdoor is connected is the "Header unit". Other outdoor units are called "Follower units".

4-3. Normal Operation (HEAT Mode)

Header unit (MMY-MAP1606HT*)

Follower unit (MMY-MAP1206HT*)

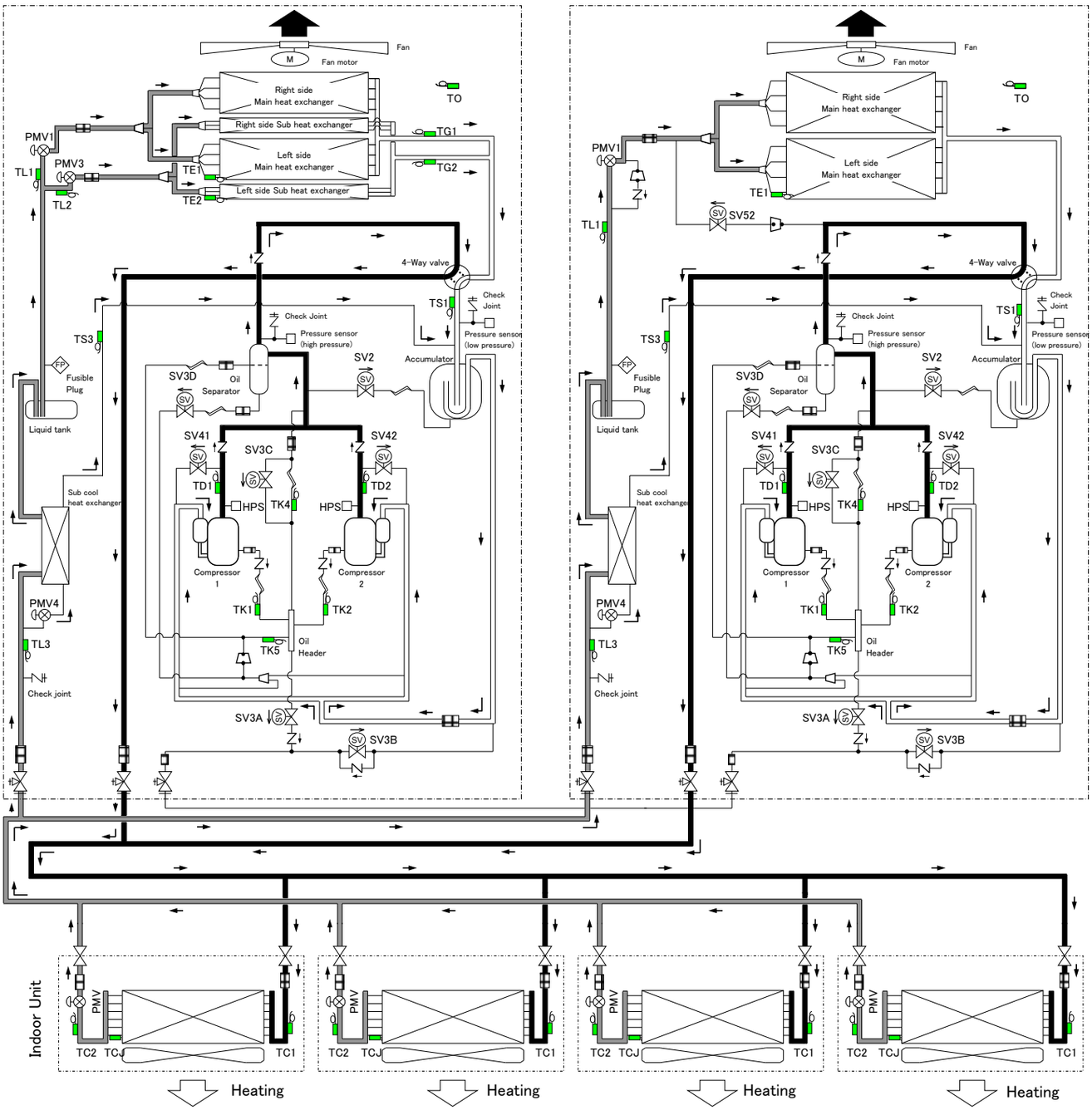

Outdoor Unit			
4-Way valve	ON	SV3A	Control
SV4(n)	OFF(*1)	SV3B	Control
SV52	OFF	SV3C	Control
PMV1	Control	SV3D	Control
PMV3	Control	Outdoor fan	Control
PMV4	Close(*2)		

High-pressure gas refrigerant
Condensed liquid refrigerant
Evaporative gas refrigerant (Low pressure)
Low-pressure circuit (Refrigerant recovery line)

(28 HP system described in the example of (16 HP + 12 HP))

(*1) SV4 (n) of stopped compressor (n)=ON

(*2) It may be controlled.

The outdoor unit which communication line between indoor and outdoor is connected is the "Header unit".
Other outdoor units are called "Follower units".

4-4. Normal Operation (HOT GAS DEFROST Mode)

Header unit (MMY-MAP1606HT8P-E/TR)

Follower unit (MMY-MAP1206HT8P-E/TR)

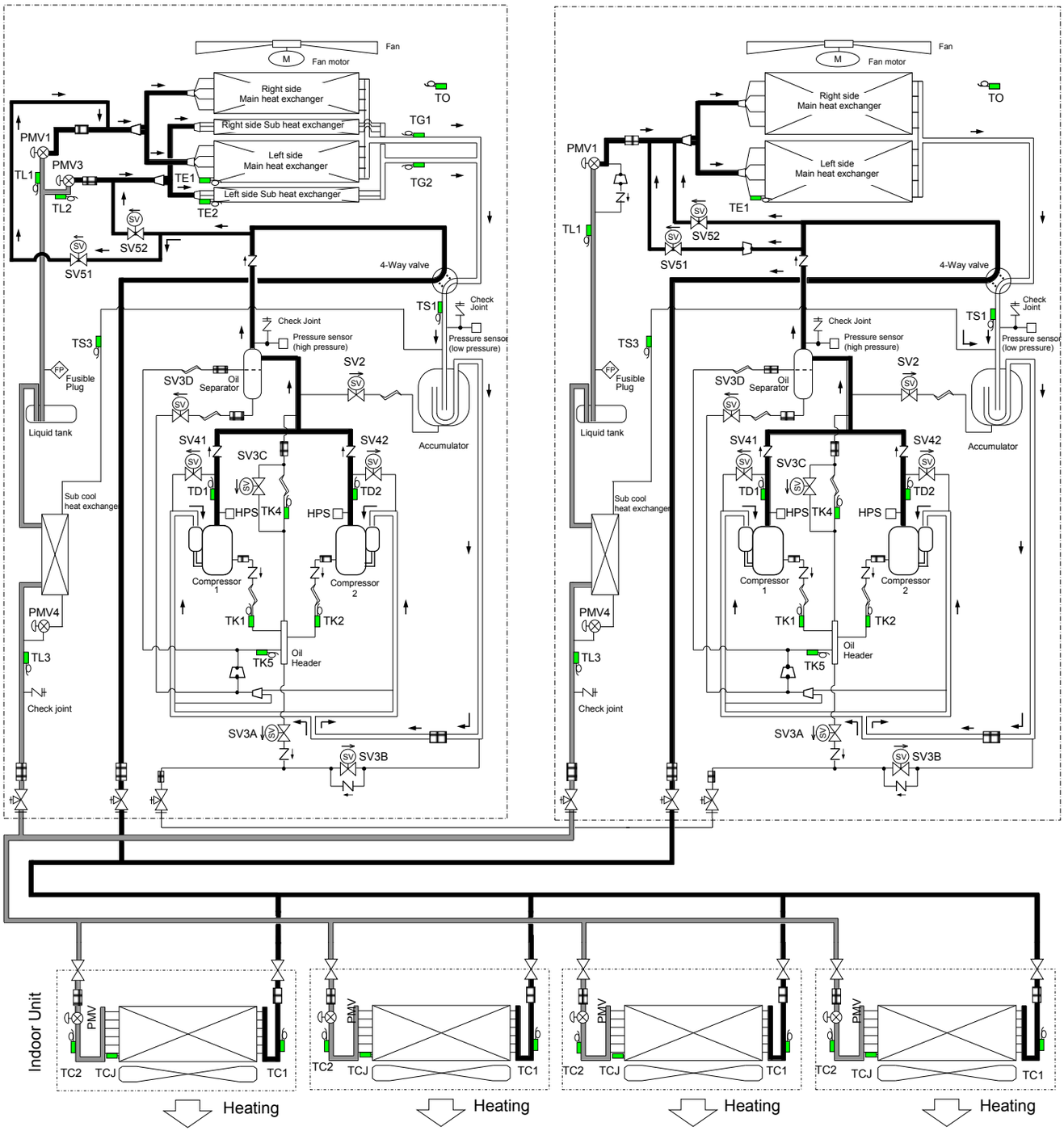

Outdoor Unit			
4-Way valve	ON	SV3A	Control
SV4(n)	OFF(*1)	SV3B	Control
SV51/52	ON	SV3C	Control
PMV1	Close	SV3D	Control
PMV3	Close	Outdoor fan	OFF
PMV4	Close		

High-pressure gas refrigerant
Evaporative gas refrigerant (Low pressure)
Condensed liquid refrigerant
Low-pressure circuit (Refrigerant recovery line)

(28 HP system described in the example of (16 HP + 12 HP))

(*1) SV4 (n) of stopped compressor (n)=ON

The outdoor unit which communication line between indoor and outdoor is connected is the "Header unit".
Other outdoor units are called "Follower units".

4-5. Emergency Operation (Cooling Operation under Header Outdoor Unit Backup Scenario)

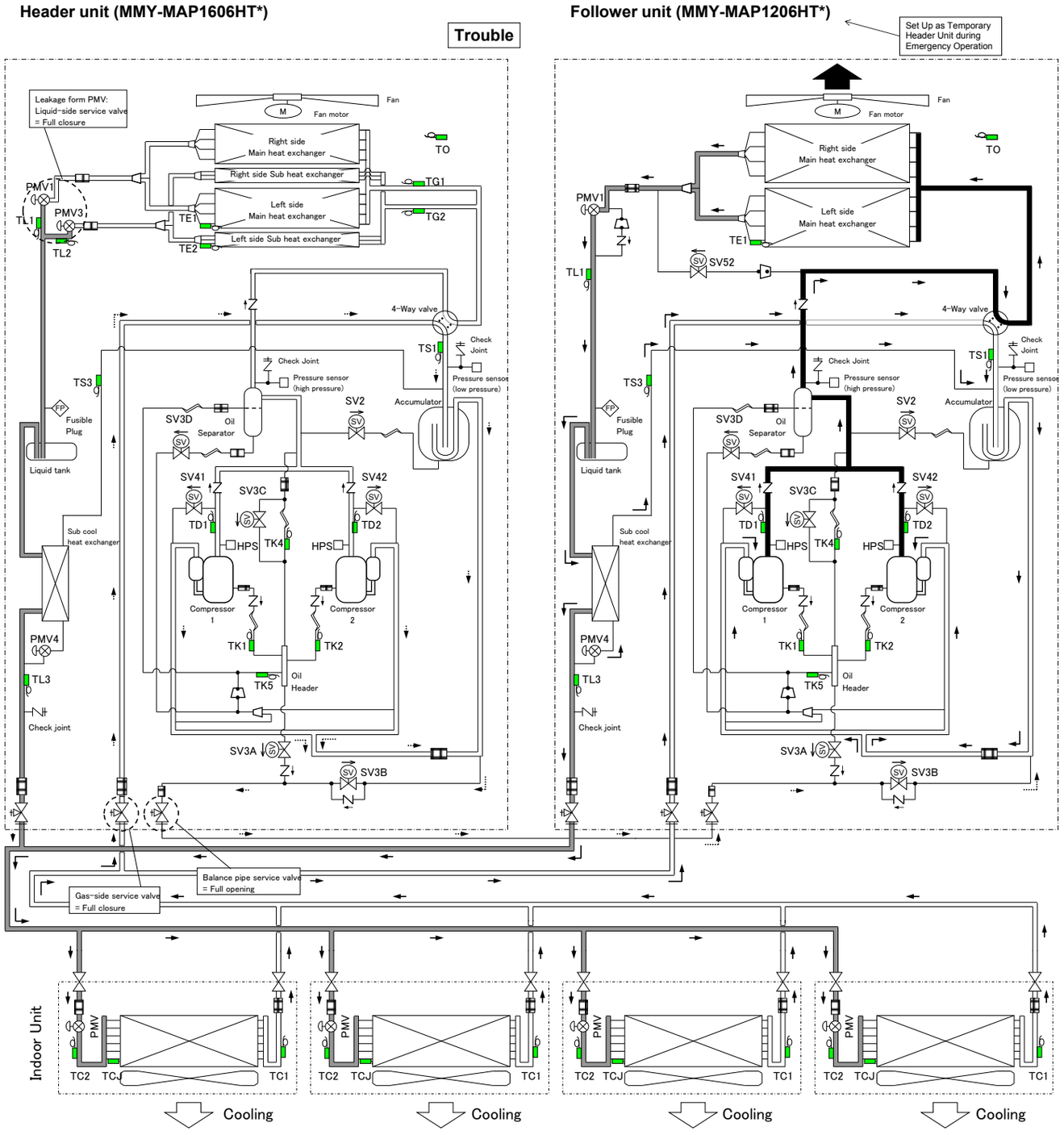

Trouble header outdoor unit			
4-Way valve	OFF	SV3A	OFF
SV4(n)	ON	SV3B	ON
SV52	OFF	SV3C	OFF
PMV1	Close	SV3D	OFF
PMV3	Close	Outdoor fan	OFF
PMV4	Close		

Temporal header outdoor unit			
4-Way valve	OFF	SV3A	Control
SV4(n)	OFF(*1)	SV3B	Control
SV52	OFF	SV3C	Control
PMV1	Control	SV3D	Control
PMV3	Control	Outdoor fan	Control
PMV4	Control		

(*1) SV4 (n) of stopped compressor (n)=ON

(*2) It may be controlled.

High-pressure gas refrigerant
Condensed liquid refrigerant
Evaporative gas refrigerant (Low pressure)
Low-pressure circuit (Refrigerant recovery line)

(28 HP system described in the example of (16 HP + 12 HP))

The outdoor unit which communication line between indoor and outdoor is connected is the "Header unit". Other outdoor units are called "Follower units".

4-6. Emergency Operation (Heating Operation under Header Outdoor Unit Backup Scenario)

Header unit (MMY-MAP1606HT*)

Trouble

Follower unit (MMY-MAP1206HT*)

Set Up as Temporary Header Unit during Emergency Operation

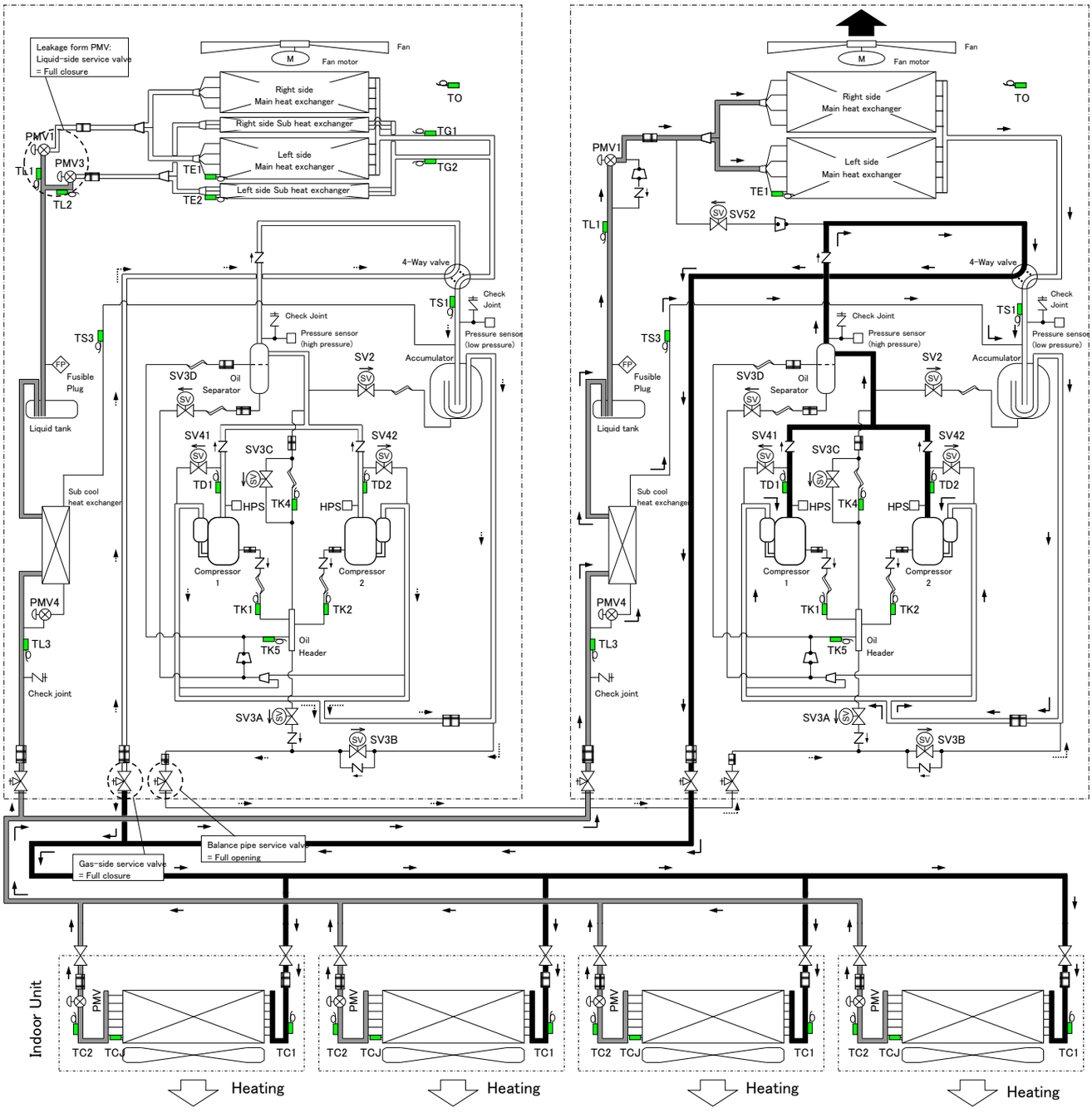

Trouble header outdoor unit			
4-Way valve	ON	SV3A	OFF
SV4(n)	ON	SV3B	ON
SV52	OFF	SV3C	OFF
PMV1	Close	SV3D	OFF
PMV3	Close	Outdoor fan	OFF
PMV4	Close		

Temporal header outdoor unit			
4-Way valve	ON	SV3A	Control
SV4(n)	OFF(*1)	SV3B	Control
SV52	OFF	SV3C	Control
PMV1	Control	SV3D	Control
PMV3	Control	Outdoor fan	Control
PMV4	Close(*2)		

(*1) SV4 (n) of stopped compressor (n)=ON

(*2) It may be controlled.

- High-pressure gas refrigerant
- Condensed liquid refrigerant
- Evaporative gas refrigerant (Low pressure)
- Low-pressure circuit (Refrigerant recovery line)

(28 HP system described in the example of (16 HP + 12 HP))

The outdoor unit which communication line between indoor and outdoor is connected is the "Header unit". Other outdoor units are called "Follower units".

4-7. Refrigerant Recovery from Failed Outdoor Unit (Pump-Down Operation under Follower Outdoor Unit Backup Scenario)

Header unit (MMY-MAP1606HT*)

Follower unit (MMY-MAP1206HT*)

Trouble

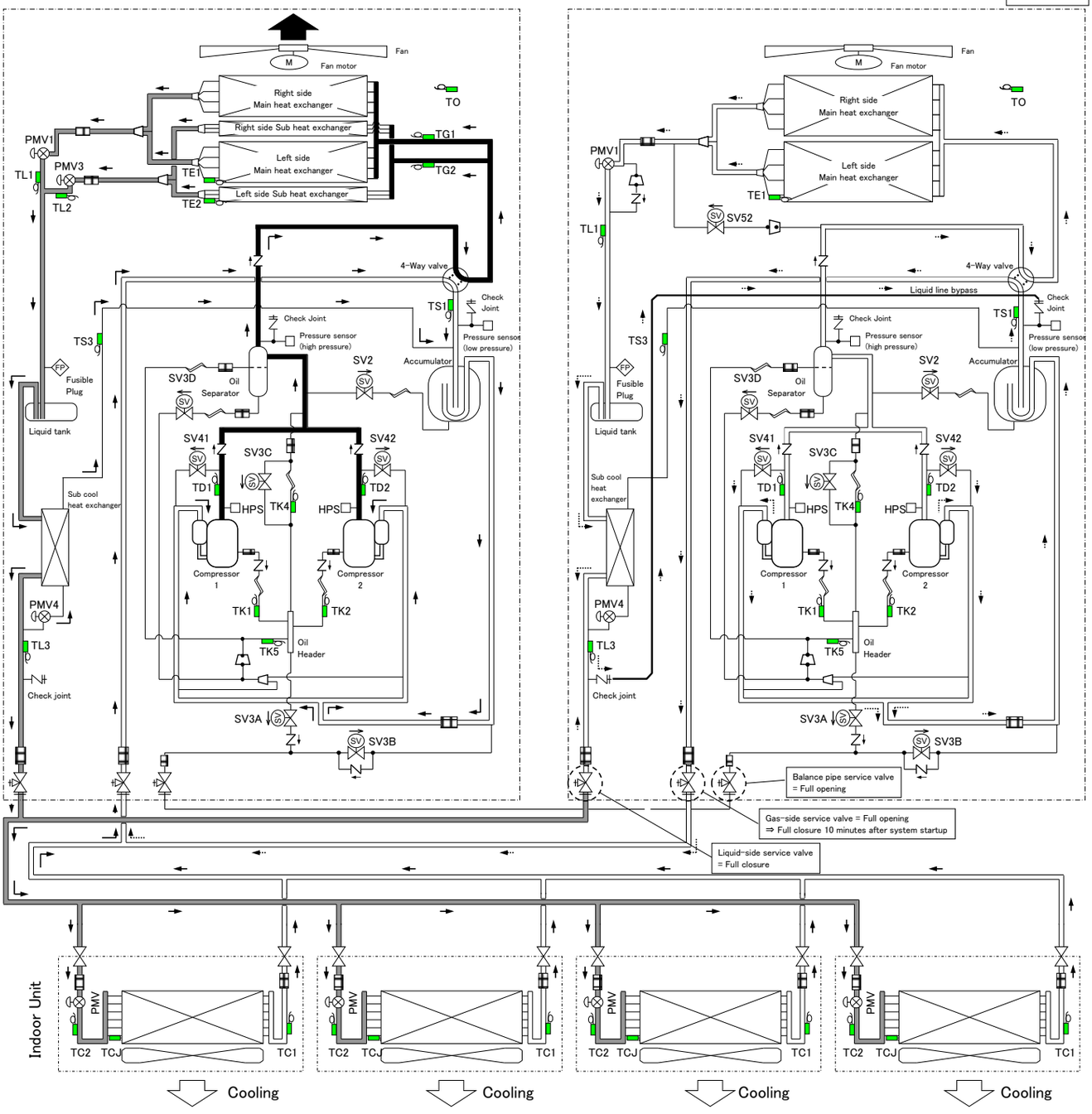

Header outdoor unit			
4-Way valve	OFF	SV3A	Control
SV4(n)	OFF(*1)	SV3B	Control
SV52	ON	SV3C	Control
PMV1	Control	SV3D	Control
PMV3	Control	Outdoor fan	Control
PMV4	Control		

Trouble outdoor unit			
4-Way valve	ON	SV3A	Control
SV4(n)	OFF(*1)	SV3B	Control
SV52	OFF	SV3C	Control
PMV1	Open(*2)	SV3D	Control
PMV3	Open(*2)	Outdoor fan	Control
PMV4	Open(*2)		

(*1) SV4 (n) of stopped compressor (n)=ON

(*2) It may be controlled.

- High-pressure gas refrigerant
- Condensed liquid refrigerant
- Evaporative gas refrigerant (Low pressure)
- Low-pressure circuit (Refrigerant recovery line)

(28 HP system described in the example of (16 HP + 12 HP))

The outdoor unit which communication line between indoor and outdoor is connected is the "Header unit". Other outdoor units are called "Follower units".

5 Control Outline

■ Outdoor Unit

Item	Description of operation, numerical data, and other information	Remarks
1. Pulse motor valve (PMV) control	1. PMV1, 3 control (PMV1 and 3) 1) During air conditioner operation, the pulse count of a PMV1 (pulse motor valve 1) is controlled between 120pls and 3000pls. During air conditioner operation, the pulse count of PMV3 is controlled between 45pls and 500pls. 2) During cooling, the PMV opening is controlled on the basis of measurements provided by the TL temperature sensor and the Pd pressure sensor (subcool control). 3) During heating, the PMV opening is controlled on the basis of measurements provided by the TS, TD and TG temperature sensors and the PS pressure sensor (super heat control). 4) PMVs are fully closed when the air conditioner is in thermostat OFF state or upon being turned off normally or shut down due to an abnormality. 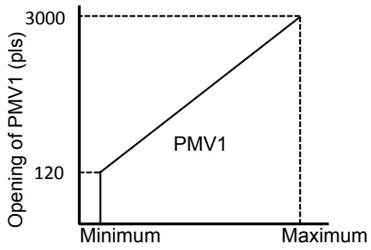 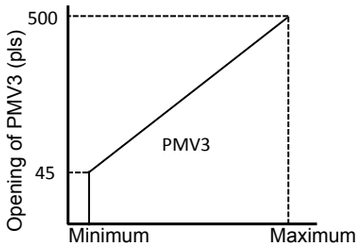 2. PMV4 control 1) During cooling, the pulse count of a PMV4 (pulse motor valve 4) is controlled between 45pls and 500pls. The PMV4 opening is controlled on the basis of measurements provided by the TL3 tenperature sensor and PD pressure sensor (Subcool control), or TS3 temperature sensor and PS pressure sensor (super heat control). 2) During heating, the pulse count of a PMV4 is controlled between 0pls and 400pls. The PMV4 opening is controlled on the basis of measurements provided by the TD1 or TD2. 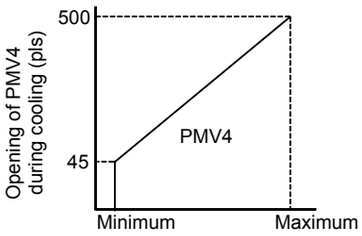 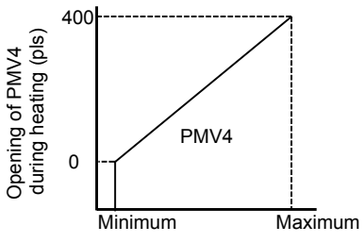	

Item	Description of operation, numerical data, and other information	Remarks
2. Outdoor fan control	1. Cooling fan control 1) Outdoor fan speed (mode) is controlled on the basis of measurements provided by the Pd pressure sensor. 2) For a specified period after the start of cooling operation, the header outdoor unit controls outdoor fan speed (mode) on the basis of measurements provided by the Pd pressure sensor. Follower units, on the other hand, control outdoor fan speed (mode) on the basis of measurements provided by the TE1 temperature sensor. 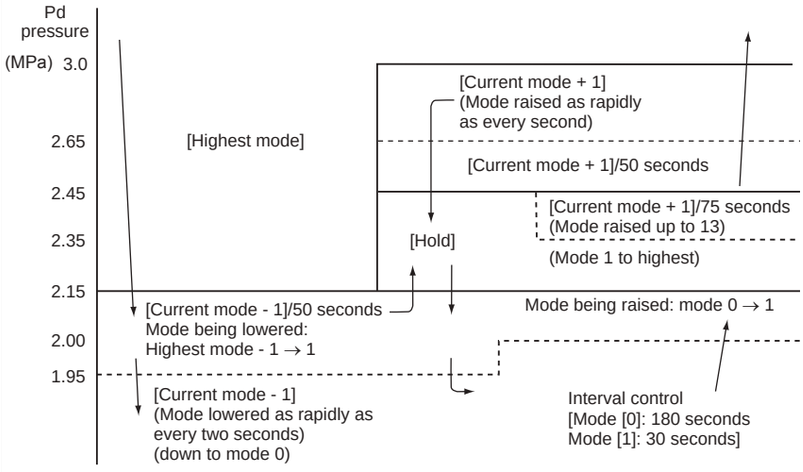 * Available control modes are 0 (at rest) to 63. 2. Heating fan control 1) Outdoor fan speed (mode) is controlled on the basis of measurements provided by the TE1 or TE2 temperature sensor. 2) If TE1 or TE2 > 25°C is continuously detected for 8 minutes, the fan may be turned off. However, this condition is the same as normal thermostat OFF, so that fan operation will be restarted. 3) For a specified period after air conditioner startup and during defrosting, this control is disabled. 4) When refrigerant is in extremely short supply, this control may cause the air conditioner to be repeatedly turned on and off. TE1 temperature (°C) 25 — Zone A: Lowest mode, timer count for forced compressor shutdown 8 — Zone B: -2/15 seconds (down to lowest mode) 6 — Zone C: -1/15 seconds (down to lowest mode) 4 — Zone D: Hold (staying at current mode) 2 — Zone E: +1/15 seconds (up to highest mode) Zone F: Highest mode 3. Control while follower unit at rest The fan is operated at mode 1 to prevent the accumulation of refrigerant inside the outdoor heat exchanger.	• The fan speed corresponding to the highest mode varies with the HP capacity of the outdoor unit. • The fan speed corresponding to the highest mode varies with the HP capacity of the outdoor unit.
3. Capacity control	1) The compressors of the header and follower units are controlled on the basis of capacity demand issued by indoor controllers. 2) The two compressors featured in an outdoor unit operate on a rotational basis, so that, every time they come to a stop, their order of startup changes. 3) Where two follower units are connected, every time the system goes thermostat OFF or all the compressors featured in the follower units come to a stop, the priority startup order of the follower units changes, as they are also subject to rotational operation.	

Item	Description of operation, numerical data, and other information	Remarks
4. Oil level detection control	1) Judgment as to whether an optimum amount of oil is present in the compressor cases is made on the basis of the temperature readings of sensors TK1 to TK5. This control function is performed by the header unit and each follower unit individually. 2) In concrete terms, judgment is based on the relationship between the temperature measurements provided by TK1, TK2, on the one hand, and those provided by TK4 or TK5, on the other. If there is depletion, oil equalization control takes over. 3) This control function is performed whenever at least one compressor is in operation. 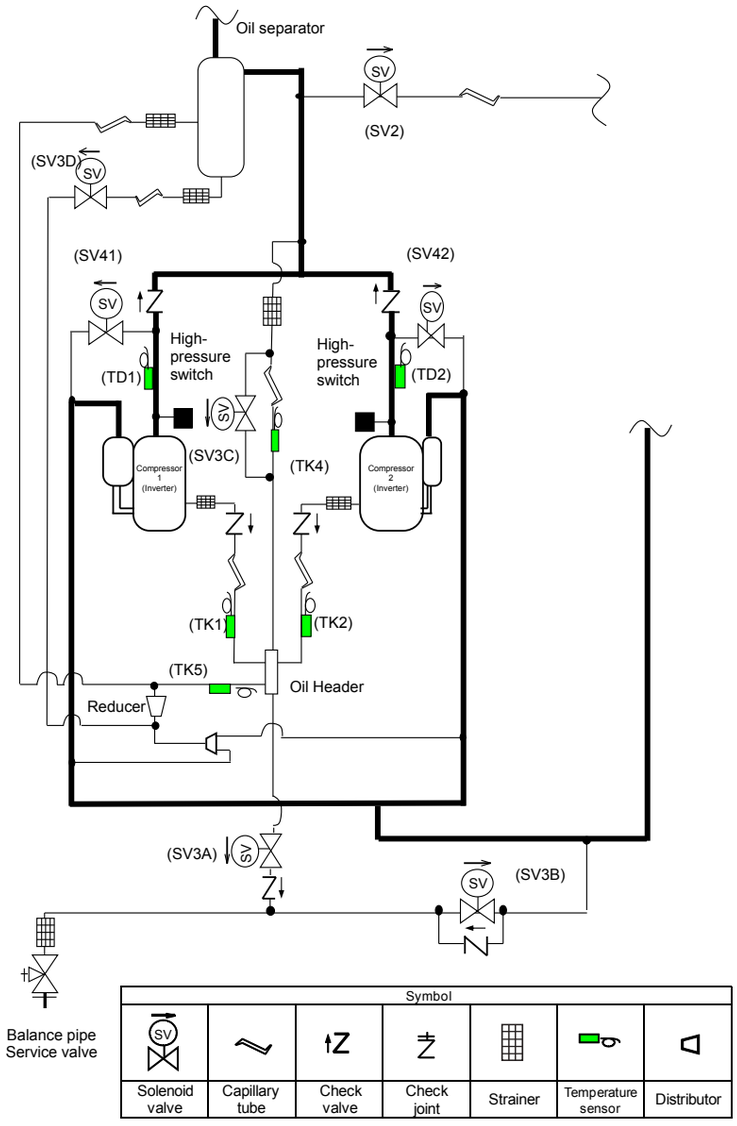 	• Oil level detection takes place regardless of the number of compressors, whether one or two. • Rough guide for oil level judgment 1) If TK1 - TK4 ≧ 14 °C, oil level of compressor 1 is optimum. 2) If TK2 - TK4 ≧ 14 °C, oil level of compressor 2 is optimum.

Item	Description of operation, numerical data, and other information	Remarks
5. Oil equation control	This control function is aimed at preventing compressors from running out of oil by evening out the oil supply to outdoor units, and is basically performed by opening/closing solenoid valves SV3A, SV3B, SV3C, SV3D. There are three control patterns as described below. (For a schematic diagram of oil equalization control, see page 57.)	
	1. Preparatory control If the oil level judgment result in the memory continues to be “low” for 30 seconds, SV3B is turned on, with SV3D turned on and off intermittently.	• Oil accumulated in the oil separator is returned to the compressor.
	2. Oil equation control This control function is performed to transfer oil to the outdoor unit whose oil level is low from other outdoor units. It takes place whenever the header unit registers a low oil level result while at least one of its compressors is turned on or at least one of the follower units issues an oil level equation request. This control function does not apply to a header unit-only system (no follower units connected).	• This is normal oil equalization control.
	3. Oil depletion protection control This control function is performed if oil equation control fails to achieve an optimum oil level. In concrete terms, if a low oil level situation continues for 30 minutes, the unit is brought to a protective shutdown, followed by a restart 2 minutes and 30 seconds later. If protective shutdown is repeated three times, the error is confirmed as final. (There will be no more restarts.) The check code is “H07”.	• This protective control is performed when a prolonged low oil level is detected.
6. Refrigerant/ oil recovery control	1. Cooling oil (refrigerant) recovery control Performed during cooling, this control function aims to: periodically collect any refrigerating oil condensate that has built up in inter-unit gas pipes and indoor units and return it to outdoor units when the compressor operation command is inadequate; and prevent the accumulation of refrigerant in outdoor heat exchangers while cooling operation is in progress under low outside air temperature conditions. It is managed by the header outdoor unit. 1) Control commencement conditions • When cooling operation has continued for at least 2 hours • When cooling operation has started (compressors have just been turned on, though this does not always happen depending on outside air temperature conditions). 2) Control details • All compressors currently in operation are operated at the minimum speed, with those currently not in operation turned on. • Indoor units are set to the cooling oil (refrigerant) recovery control mode, with their indoor PMVs opened to a certain degree. • Compressors are operated at the target speed. • After recovery control is performed for a specified period of time, it is terminated, and normal cooling operation resumes.	• Cooling oil recovery control takes place approximately every 2 hours. • Control duration is about 2 to 5 minutes, though it varies according to the operating conditions of the system.
	2. Heating refrigerant (oil) recovery control Performed during heating, this control function aims to recover any liquid refrigerant trapped inside indoor units that have been turned off. It also serves the additional purposes of recovering indoor/outdoor refrigerant after defrosting and recovering oil present in outdoor heat exchangers during heating overload operation. This control function is managed by the header outdoor unit. 1) Control commencement conditions • When heating operation has started (compressors have just been turned on) • When heating takes over upon completion of defrosting • When heating operation has continued for 60 minutes 2) Control details • All compressors currently in operation are operated at the minimum speed, with those currently not in operation turned on. • Indoor units are set to the heating refrigerant (oil) recovery control mode, with their indoor PMVs opened to a certain degree. • Compressors are operated at the target speed. • Upon completion of refrigerant recovery for all the indoor units, normal cooling operation resumes.	• Heating oil recovery control takes place approximately every hour. • Control duration is about 2 to 10 minutes, though it varies according to loading conditions. • Compressor rotational speed varies with control conditions, indoor unit capacity, and outdoor unit specification.

Item	Description of operation, numerical data, and other information	Remarks
7. Defrosting control (reverse defrosting method)	1. Defrosting commencement conditions • During heating operation, the cumulative duration of operation in which TE1 and TE2 sensor temperature falls below frost formation temperature is measured, and when this reaches 55 minutes, defrosting control is introduced. (Just after startup or upon changeover from cooling to heating, the target cumulative duration is 25 minutes.) * If the outdoor units are a combination of different models, all the units begin engaging in defrosting control as soon as one of them satisfies defrosting commencement conditions.	• Frost formation temperature is -1.5 °C. • If the outdoor units are a combination of different models, defrosting operation, once started, cannot be manually terminated for about 2 minutes. • In case of All Fresh Air Intake Unit connection system, replace 55 minutes with 30 minutes.
	2. Details of defrosting control 1) All compressors currently in operation are operated at the minimum speed. 2) When a specified amount of time passes from the time the compressors reached the minimum speed, the outdoor fans are turned off by closing the 4-way valves. And the PMV4 opening operated at the target opening for defrosting control. 3) All compressors currently not in operation are turned on and operated at the target rotational speed for defrosting control.	• To protect the refrigerating cycle circuit, the fan mode may be controlled during defrosting.
	3. Defrosting termination conditions • Defrosting termination conditions are met when the TE1 and TE2 temperature sensor measurement reaches a specified value (roughly 12 °C) a certain period of time after the commencement of defrosting control. In that event, defrosting termination control takes over. * If the outdoor units are a combination of different models, defrosting termination control commences when all the units satisfy the defrosting termination conditions. As long as one or more outdoor units are yet to satisfy the defrosting termination conditions, those that have engage in standby operation.	• During defrosting control, compressors are controlled so that their speeds do not exceed 76.6 rps.
	4. Details of defrosting termination control 1) Compressors are operated at the standby operation speed. 2) When a specified amount of time passes, the 4-way valves are opened. 3) Indoor heating refrigerant recovery control is performed. For control details, see “ 6. Refrigerant/oil recovery control”.	• During standby operation, compressor speed is in the 24-33.5 rps range. (It varies from outdoor unit to outdoor unit.)
8.Hot gas defrosting control	1. Hot gas defrosting commencement conditions • During heating operation, the cumulative duration of operation in which the TE1 (or TE2) temperature sensor falls below the frost formation temperature is recorded. Once the time duration exceeds 30 minutes, the hot gas defrosting control begins. *If the outdoor units are in a combination (module), only the outdoor units that are operating their compressors, will perform the hot gas defrosting control.	・ Frost formation temperature is -1.5°C. ・ In case of All Fresh Air Intake Unit connection system, hot gas defrosting is not operated.
	2. Details of hot gas defrosting control 1) SV51 and SV52 are opened. 2) PMV1 (and PMV3) are closed. 3)The outdoor fans are turned off. 4) Compressors are operated at the target rotational speed for hot gas defrosting control.	・ When outside temperature is –10°C or lower, hot gas defrosting control is disabled. (Only Reverse defrosting). This is due to insufficient capacity output, from the outdoor unit, resulting in potentially unacceptable performance
	3. Hot gas defrosting termination conditions • Hot gas defrosting termination conditions are met when the TS1 (or TG1 and TG2) temperature sensor measurement reaches a value of 12°C for a specified value of time (within 4.5 minutes) after the commencement of hot gas defrosting control. In the event that these values are achieved the hot gas defrosting termination control will take over. *For module installations (multiple outdoor units). During Hot gas operation, ALL outdoor units must meet the termination conditionings for the hot gas control. If not the following defrost operation (25 minutes later if TE1 (or TE2) temperatures measurements continues below the frost formation temperature) will results in a standard reverse defrosting operation.	・ During hot gas defrosting control, compressors are controlled so that their speeds do not exceed 76.6 rps.
	4. Details of hot gas defrosting termination control 1) Open the PMV1 (and PMV3) to a certain degree. 2) SV51 and SV52 are closed. 3) Normal heating operation resumes.	

<table>
<tr><th>Item</th><th>Description of operation, numerical data, and other information</th><th>Remarks</th></tr>
<tr><td>9. Release valve control</td><td>

1. SV2 gas balance control

This control function is aimed at achieving gas balance by opening SV2 while compressors are turned off so as to reduce their startup load the next time they are turned on. It is individually performed by the header outdoor unit and each follower outdoor unit.

1) Control conditions
- In cooling, compressors have been turned off.
- In heating, the header unit has been shut down.

2) Control details
- The control point is changed according to ΔP (Pd pressure - Ps pressure) registered just before the compressors were turned off.
- When ΔP ≧ P1, SV2 is opened. When this results in ΔP < P2, SV2 is closed.
- When ΔP < P1, SV2 is closed.

(Unit: MPa)

<table>
<tr><td rowspan="4">Control points for Pd pressure P1, P2</td><td colspan="2">Heating</td><td colspan="4">Cooling</td></tr>
<tr><td colspan="2">Header unit compressors</td><td colspan="2">Header unit compressors</td><td colspan="2">Header unit compressors</td></tr>
<tr><td colspan="2">OFF</td><td colspan="2">OFF</td><td colspan="2">ON</td></tr>
<tr><td>P1</td><td>P2</td><td>P1</td><td>P2</td><td>P1</td><td>P2</td></tr>
<tr><td>Header unit</td><td>1.3</td><td>1.1</td><td>1.3</td><td>1.1</td><td>—</td><td>—</td></tr>
<tr><td>Follower unit</td><td>1.3</td><td>1.1</td><td>1.3</td><td>1.1</td><td>0.5</td><td>0.4</td></tr>
</table>

2. SV2 high pressure release control

This control function is aimed at mitigating pressure rise while a compressor is in operation at low speeds.

1) Control conditions
- Heating operation is in progress (except periods of defrosting control).
- A lone compressor from the header unit is in operation at low speeds of up to 36 rps.

2) Control details
- When Pd pressure becomes ≧ 3.4 MPa, SV2 is opened.
- When Pd pressure becomes ≦ 2.8 MPa, SV2 is closed.

3) Termination conditions
- Shutdown, thermostat OFF, defrosting operation, or cooling operation.
- The number of header unit compressors in operation increases to two .
- At least one follower unit compressor is turned on.
- The speed of the compressor rises to 40 rps or more.

3. SV2 low pressure release control

This control function is aimed at preventing a rapid fall in pressure during transient operation. It is individually performed by the header outdoor unit and each follower outdoor unit.

The control is always provided except during periods of stoppage or thermostat OFF.

1) Control details
- When Ps pressure becomes ≦ 0.16 MPa, SV2 is opened.
- When Ps pressure becomes > 0.20 MPa, SV2 is closed.

</td><td></td></tr>
</table>

<table>
<tr><th>Item</th><th>Description of operation, numerical data, and other information</th><th>Remarks</th></tr>
<tr><td>9. Release valve control (cont'd)</td><td>4. SV41, 42 low pressure release control
This control function is aimed at providing low pressure protection, and is individually performed by the header unit and each follower unit.
The control takes place during defrost operation, heating startup pattern control operation, and cooling operation.
1) Control details (heating)
When Ps pressure becomes ≦ 0.1 MPa, SV41, 42 are opened; when Ps pressure becomes ≧ 0.15 MPa, SV41, 42 are closed.
2) Control details (cooling)
When Ps pressure and Pd pressure become ≦ 0.14 MPa and ≦ 1.8 MPa, respectively, SV41 and 42 are opened; when Ps pressure and Pd pressure become ≧ 0.19 MPa and ≧ 2.2 MPa, respectively, SV41 and 42 are closed.
5. SV52 high pressure release control
This control function is aimed at mitigating pressure rise and is only performed by the header unit.
1) Control details (heating)
When Pd pressure and compressor speed become ≧ 3.4 MPa and ≦ 38 rps, respectively, during heating, with a single compressor in operation, SV52 is opened; when Pd pressure becomes ≧ 2.7 MPa, or compressor speed ≧ 64 rps, SV52 is closed.</td><td></td></tr>
<tr><td>10. High pressure release compressor shutdown control</td><td>This control function is aimed at automatically shutting down a compressor in an outdoor unit depending on Pd pressure. It is individually performed by the header unit and each follower unit.
1) Control details
• Compressors are shut down when Pd pressure reaches or exceeds P01 and P02.
• The compressor restart prevention timer (2 minutes 30 seconds) is set, and the control terminated.</td><td>• When Pd ≧ P01 compressor No. 2 (the last one of two compressors in terms of startup order in a two compressor configuration) is shut down.
• When Pd ≧ P02 compressor No. 1 (the first compressor in terms of startup order) is shut down.
(unit : MPa)
<table>
<tr><th></th><th>P01</th><th>P02</th></tr>
<tr><td>Heating</td><td>3.45</td><td>3.5</td></tr>
<tr><td>Cooling</td><td>3.85</td><td>3.9</td></tr>
</table></td></tr>
<tr><td>11. Case heater control</td><td>There are two types of case heaters: a compressor case heater and an accumulator case heater. This control function is aimed at preventing the accumulation of refrigerant in those cases, and is performed by all outdoor units.
If the power supply has not been turned on for a specified period before a post-installation test run, compressor failure may occur. Similarly, when starting compressors after a long period of no power supply, it is recommended that the power supply be turned on for a while before operation is resumed, just like a post-installation test run.
This control function is sometimes used alongside an electrical charging of the compressor motor windings. In this case, a charging sound may be heard, but this is normal.
1) Control details
• The heaters are turned on while the compressors are turned off.
• The heaters are turned off when T0 sensor temperature becomes ≧ 28 °C, and are turned back on when T0 sensor temperature becomes ≦ 25 °C.
• When the compressors are turned on, the heaters are kept on for 10 minutes.</td><td></td></tr>
</table>

Item	Description of operation, numerical data, and other information	Remarks
12. A3-IPDU control	IPDU controls inverter compressors by issuing commands relating to compressor speeds, speed increases/decreases, and current release control values via the interface P.C. board. The main control functions of the IPDU P.C. board are described below. 1. Current release control To prevent inverter input current from exceeding the specified value, output frequency is controlled with AC input current as detected by T02 mounted on the control P.C. board.	

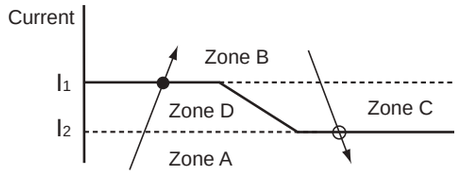

Zone A:Compressors are operated normally.
Zone D:The current operating frequency is maintained.
Zone B:Operating frequency is lowered.
Zone C:The lowering of operating frequency is halted to maintain the current frequency.

Current control values for various outdoor units are shown below.

Outdoor unit HP capacity	I_1	I_2
22	23.7	23.2
20	21.6	21.1
18	19.5	19.0
18B	17.5	17.0
16	17.5	17.0
14	15.2	14.7
14B	12.7	12.2
12	12.7	12.2
10	10.5	10.0
8	10.0	9.5

2. Heat sink temperature detection control
   1) This control function is aimed at protecting IPM from overheating via a thermistor (TH sensor) mounted in the compressor drive module (Q201) of A3-IPDU.
   2) When TH ≧ about 75~80 °C *1 is detected, the fan operation mode is raised by one step, followed by a series of additional step-ups right up to the highest mode at a rate of one step/5 seconds.
   3) After step 2), the normal fan mode is restored when TH falls to < about 75~80 °C *1.
   4) When TH ≧ 97 °C, compressors are shut down.
   5) Compressors are restarted 2 minutes and 30 seconds later, with an error count of 1 recorded. If this is repeated four times (error count reaches 4), the error is confirmed as final. The error [P07] is displayed. (There will be no more restarts.)
      * Possible causes of the confirmed error include a heat buildup in the outdoor unit, fan abnormality, blockage of the cooling duct, and IPDU P.C. board fault.
      * The TH temperature used in this control function is the highest registered by A3-IPDU1, A3-IPDU2.

Remarks:
- A3-IPDU1 and 2 are each provided with a TH sensor.

*1 It changes depending on the model and temperature condition.

3. Overcurrent protection control
   1) When the overcurrent protection circuit on an IPDU P.C. board detects an abnormal current, the compressor is shut down.
   2) The compressor is restarted 2 minutes and 30 seconds later, with an error count of 1 recorded. If the compressor successfully operates for at least 10 minutes after a restart, the error count is cleared.
   3) If the error count reaches 8, the error is confirmed as final.

4. High pressure SW control
   1) When the high pressure SW of an inverter compressor is activated, the compressor is shut down with an error count of 1 recorded.
   2) The compressor is restarted 2 minutes 30 seconds later, and, if it successfully operates for at least 10 minutes, the error count is cleared.
   3) If the error count reaches 4, the error is confirmed as final. The check code “P04” is displayed.

Remarks:
- Connected to A3-IPDU, the high-pressure SW is normally closed.

<Other points to note>

1 Cooling operation under low outside temperature conditions

1) If pressure falls to extremely low levels, indoor units may be shut down via freeze prevention control based on the indoor TC sensor.
2) If pressure falls to extremely low levels, frequency may be reduced via cooling capacity control.
3) When the discharge temperature sensor reading falls below 60°C, the frequency may be increased above the level called for by the command received from the indoor unit.

2 PMV (Pulse Motor Valve)

1) When the power is turned on, PMVs generate a tapping sound as they are initialized. If this sound is not heard, there is a possibility of faulty PMV operation. However, in a noisy environment, it may simply be drowned out by ambient noise.
2) Do not separate the actuator (head section) from any PMV during operation. It may result in an inaccurate opening.
3) When transporting (relocating) the set, do not, under any circumstances, keep the actuator separated. It may damage the valve by causing it to close and exposing it to pressure from sealed liquid.
4) When reattaching the actuator after its removal, push it in firmly until a click sound is heard. Then, turn the power off and back on again.

<Schematic diagram for oil equation control>

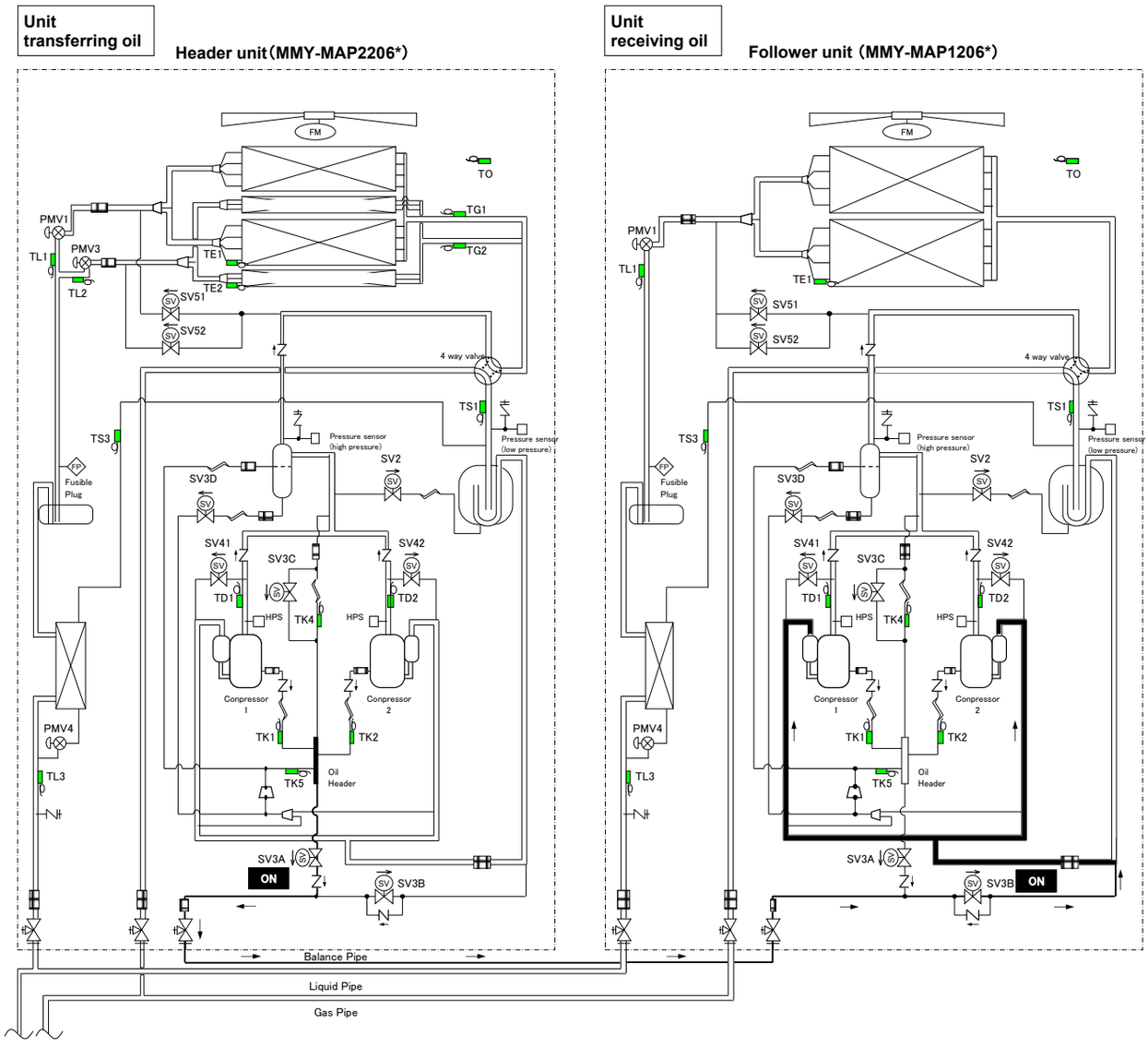

6. Applied control and Functions

6-1. Applied Control for Indoor Unit

6-1-1. Control Specifications

<table>
<tr><th>NO.</th><th>Item</th><th>Specification outline</th><th>Remarks</th></tr>
<tr><td>1</td><td>Upon power supply reset</td><td>1. Identification of outdoor unit
When the power supply is reset, the outdoor unit is identified, and control is redirected according to the identification result.
2. Indoor fan speed and air flow direction control availability settings
Settings such as indoor fan speed and air flow direction control availability are replaced on the basis of EEPROM data.
3. If power supply reset is performed in the wake of a fault, the check code is cleared. If the abnormality persists after the Start/Stop button on the remote controller is pressed to resume operation, the check code is redisplayed on the remote controller.</td><td></td></tr>
<tr><td>2</td><td>Operation selection</td><td>1. The operation mode changes in response to an operation selection command issued via the remote controller.
<table>
<tr><th>Remote controller command</th><th>Control outline</th></tr>
<tr><td>STOP</td><td>Air conditioner shutdown</td></tr>
<tr><td>FAN</td><td>Fan operation</td></tr>
<tr><td>COOL</td><td>Cooling operation</td></tr>
<tr><td>DRY</td><td>Drying operation</td></tr>
<tr><td>HEAT</td><td>Heating operation</td></tr>
</table></td><td>Ts: Temperature setting
Ta: Room temperature</td></tr>
<tr><td>3</td><td>Room temp. control</td><td>1. Adjustment range - remote controller temperature setting (°C)
<table>
<tr><th></th><th>COOL/DRY</th><th>HEAT</th></tr>
<tr><td>Wired type</td><td>18~29</td><td>18~29</td></tr>
<tr><td>Wireless type</td><td>18~30</td><td>16~30</td></tr>
</table>
2. In heating operation, the temperature setting may be fine-tuned via the DN code “06”.
<table>
<tr><td>SET DATA</td><td>0</td><td>2</td><td>4</td><td>6</td></tr>
<tr><td>Temperature setting adjustment</td><td>+0°C</td><td>+2°C</td><td>+4°C</td><td>+6°C</td></tr>
</table>
Factory default
<table>
<tr><th>SET DATA</th></tr>
<tr><td>2</td></tr>
</table></td><td>Shift in heating suction temperature
(not applicable to remote controller thermo operation)</td></tr>
<tr><td>4</td><td>Automatic capacity control</td><td>1. The outdoor unit determines the operational capacities of indoor units according to the difference between Ta and Ts.
 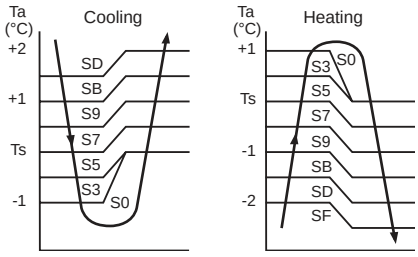
</td><td>Ts: Temperature setting
Ta: Room temperature</td></tr>
</table>

NO.	Item	Specification outline	Remarks
5	Fan speed control	1. The fan operates in one of the four speed modes of “HIGH (HH)”, “MED (H)”, “LOW (L)” and “AUTO” on the basis of a command issued via the remote controller. (Concealed duct high static pressure type: HH only) 2. In AUTO fan speed mode, the air speed changes according to the difference between Ta and Ts. **<Cooling>** 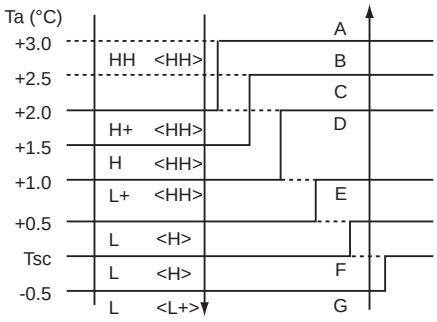 • Control is identical in remote controller thermo and body thermo operation. Speed modes shown in < > apply to cooling operation under AUTO air conditioner operation mode. • In AUTO fan speed mode, the fan speed remains the same for 3 minutes each time a speed change occurs. However, a speed change command issued via the remote controller can override this, and the fan speed changes accordingly. • At the beginning of cooling operation, a higher speed (steeper downward temperature gradient) is chosen. • As long as the temperature difference remains on a boundary line, the fan speed stays the same. **<Heating>** 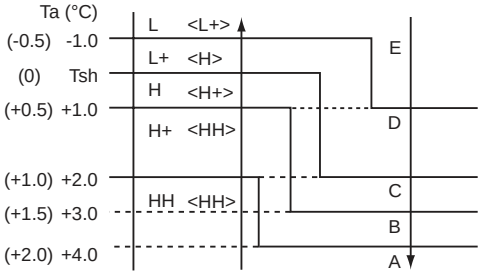 Figures inside ( ) applies to remote controller thermo operation. Figures outside ( ) applies to body thermo operation. Speed modes shown in < > apply to heating operation under AUTO air conditioner operation mode. • In AUTO fan speed mode, the fan speed remains the same for 1 minute each time a speed change occurs. However, a speed change command issued via the remote controller can override this, and the fan speed changes accordingly. • At the beginning of heating operation, a higher speed (steeper upward temperature gradient) is chosen. • As long as the temperature difference remains on a boundary line, the fan speed stays the same. • When TC2 ≧ 60 °C, the fan speed is raised by one step. 3. If the air conditioner goes thermo OFF during heating operation, the fan speed drops down to LL (breeze).	HH > H+ > H > L+ > L > UL or LL DN code “32” “0000”: Body thermo “0001”: Remote controller thermo TC2: Indoor heat exchanger sensor temperature “HEATING STANDBY ” displayed

<table>
<tr><th>NO.</th><th>Item</th><th>Specification outline</th><th>Remarks</th></tr>
<tr><td>6</td><td>Cold air discharge prevention control</td><td>1. In heating operation, the upper limit of the fan tap is set according to the lower of whichever is the higher between TC2 sensor and TCJ sensor temperatures, on the one hand, and TC1 sensor temperature, on the other.
• If the fan continuously operates in zone B for 6 minutes, it automatically moves into zone C.
• During defrosting, the control point is shifted by +6°C.
 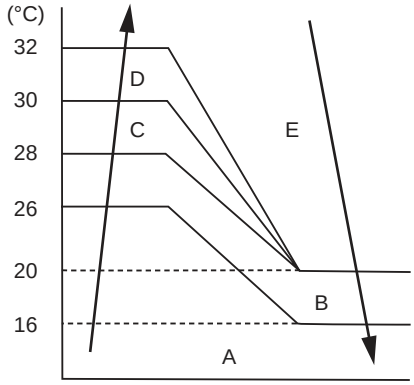

Zone A:OFF
Zone B:26 °C or above and below 28 °C Breeze
Zone C:28 °C or above and below 30 °C Low
Zone D:30 °C or above and below 32 °C Medium
Zone E:High</td><td>TCJ: Indoor heat exchanger sensor temperature
• In zones D and E, priority is given to the remote controller fan speed setting.
• In zone A, “HEATING STANDBY ” is displayed.</td></tr>
<tr><td>7</td><td>Freeze prevention control (low temp. release)</td><td>1. During cooling, the air conditioner is operated in the manner described below according to the temperature readings of the TC1, TC2 and TCJ sensors.
• If zone J operation is detected for 5 minutes, the air conditioner is forced into thermo OFF.
• In zone K, the timer is put on pause, with the current timer count retained.
• If zone I operation is detected, the timer count is cleared, and the air conditioner returns to normal operation.
• If continuous zone J operation forces the air conditioner into thermo OFF, the indoor fan is operated in breeze mode until it moves into zone I.
The control is terminated under the following conditions:
Termination conditions
1) TC1 ≧ 12°C, TC2 ≧ 12°C, and TCJ ≧ 12°C
2) Passage of 20 minutes after stoppage
 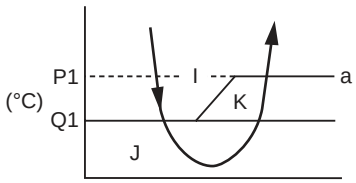

<table><tr><th></th><th>TC1</th><th>TC2, TCJ</th></tr><tr><td>P1</td><td>10°C(5°C)</td><td>-10°C</td></tr><tr><td>Q1</td><td>0°C</td><td>-14°C</td></tr></table>
Temperature in ( ): If the temperature is below this value when the power is turned on, the air conditioner is forced into thermo OFF.
2. During cooling, the air conditioner is operated in the manner described below according to the temperature readings of the TC2 and TCJ sensors.
• If zone M operation is detected for 45 minutes, the air conditioner is forced into thermo OFF.
• In zone N, the timer is put on pause, with the current timer count retained.
• When the air conditioner goes back into zone M, timer count is resumed from the retained value.
• If zone L operation is detected, the timer count is cleared, and the air conditioner returns to normal operation.
 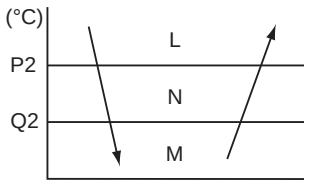

<table><tr><th></th><th>TC2, TCJ</th></tr><tr><td>P2</td><td>5</td></tr><tr><td>Q2</td><td>-2.0</td></tr></table>
Reset conditions
1) TC1 ≧ 12°C, TC2 ≧ 12°C and TCJ ≧ 12°C
2) Passage of 20 minutes after stoppage</td><td>TC1: Indoor heat exchanger sensor temperature

* With models without TC2, TC2 is not part of the control parameters.</td></tr>
</table>

NO.	Item	Specification outline	Remarks
8	Cooling oil (refrigerant) recovery control	While the outdoor unit is recovering cooling oil (refrigerant), the indoor units perform the following control tasks: [common for operational (cooling thermo ON / thermo OFF / FAN), as well as non-operational indoor units] 1) Open the indoor PMV to a certain degree. 2) Engage in recovery control for a specified period of time and return to normal cooling operation at the end of this period upon terminating the control. 3) Operate the drain pump throughout the recovery control period and for about 1 minute after it.	• Recovery operation normally takes place roughly every 2 hours. • The opening position of the indoor PMV depending on the type and capacity of the indoor unit.
9	Heating refrigerant (oil) recovery control	While the outdoor unit is recovering heating refrigerant (oil), the indoor units perform the following control tasks: 1) Open the indoor PMV to a certain degree. 2) Control the indoor fan according to the operation mode. [Indoor units operating in heating thermo ON/OFF state] Let the indoor fan continue operating, but turn it off if the temperature of the indoor heat exchanger drops. [Indoor units operating in FAN mode] Turn off the indoor fan and display “HEATING STANDBY” on the remote controller. [Non-operational indoor units] Keep the indoor fan turned off. 3) Terminate the recovery operation depending on the TC2 temperature reading. The timing of termination is determined by each indoor unit. 4) Operate the indoor fan and drain pump for about 1 minute after the termination of the recovery operation. (Applicable to 4-way air discharge cassette type, 2-way air discharge cassette type and 1-way air discharge cassette type)	• Recovery operation normally takes place roughly every hour. • The opening position of the indoor PMV depending on the type and capacity of the indoor unit.
10	Defrosting control	While the outdoor unit is engaged in defrosting control, the indoor units perform the following control tasks: 1) Open the indoor PMV to a certain degree. 2) Control the indoor fan according to the operation mode. [Indoor units operating in heating thermo ON/OFF state] Let the indoor fan continue operating for a while, but turn it off as the temperature of the indoor heat exchanger drops. [Indoor units operating in FAN mode] Let the indoor fan continue operating. [Non-operational indoor units] Keep the indoor fan turned off. 3) As defrosting control comes to an end, it gives way to heating refrigerant (oil) recovery control. (For control details, see “9. Heating refrigerant (oil) recovery control” above.)	• For defrosting commencement conditions, see “ 7. Defrosting control (reverse defrosting method)” above. • The opening position of the indoor PMV depending on the type and capacity of the indoor unit.
11	Short intermittent operation compensation control	1. For 5 minutes after startup, the system is forced to continue operating even if it reaches the thermo OFF region. 2. However, priority is given to cooling/heating selection, operation standby, and protective control, so that there is no overriding of thermo OFF in these cases.	
12	Drain pump control	1. During cooling (including DRY operation), the drain pump is operated at all times. 2. If the float switch is activated while the drain pump is in operation, the drain pump continues operating, with the relevant check code displayed. 3. If the float switch is activated while the drain pump is turned off, thermo OFF is forced on the air conditioner, with the drain pump put into operation. If the float switch continues to be activated for about 5 minutes, the drain pump is turned off, with the relevant check code displayed.	Check code [P10]
13	Elimination of residual heat	1. When the air conditioner is turned off after engaging in heating operation, the indoor fan is operated for about 30 seconds in “breeze” mode.	

<table>
<tr><th>NO.</th><th>Item</th><th>Specification outline</th><th>Remarks</th></tr>
<tr><td>14</td><td>Filter sign display
(not applicable to wireless type)
* Provided in the separately mounted type, TCB-AX21E.</td><td>1. The indoor fan’s cumulative hours of operation are counted, and when these exceed the prescribed value (150H/2500H), a filter replacement signal is sent to the remote controller to display a filter sign on it.
2. When a filter reset signal is received from the remote controller, the timer measuring cumulative hours is cleared. If the prescribed hours have been exceeded, the hours count is reset, with the sign on the remote controller display erased.
<table>
<tr><th>Filter service life</th><th>2500H</th><th>150H</th></tr>
<tr><td>Type</td><td>4-way air discharge cassette type
1-way air discharge cassette type (SH, YH)
2-way air discharge cassette type
Under ceiling type
Concealed duct standard type
Concealed duct high static pressure type
Slim duct type</td><td>High wall type
Floor standing type
Floor standing concealed type
Floor standing cabinet type</td></tr>
</table></td><td>“FILTER ▦ ” displayed</td></tr>
<tr><td>15</td><td>Operation standby
Heating standby</td><td><Operation standby> ..... Displayed on remote controller
1. When any of the DN codes listed below is displayed
• “P05” - Detection of an open phase in the power supply wiring
• “P10” - Detection of indoor flooding in at least one indoor unit
• “L30” - Detection of an interlock alarm in at least one indoor unit
2. Forced thermo OFF
• “COOL/DRY” operation is unavailable because at least one indoor unit is operating in “HEAT” mode.
• “HEAT” operation is unavailable because at least one indoor unit is operating in “COOL/DRY” mode under priority cooling setting (bit 1 of SW11 on outdoor I/F P.C. board ON).
3. All indoor units not able to engage in any of the above operations stand by in thermo OFF state.
4. The indoor fan has been turned off because the system is engaged in a heat refrigerant (oil) recovery operation.
<Heating standby> ..... Displayed on remote controller
1. Normal thermo OFF
• During heating, the indoor unit goes thermo OFF as the heating temperature setting is reached.
2. During heating, the fan rotates at a breeze speed (UL or lower) or remains stationary to prevent cold air from being discharged (including defrosting operation).
3. Forced thermo OFF
• “HEAT” operation is unavailable because at least one indoor unit is operating in “COOL/DRY” mode under priority cooling setting (bit 1 of SW11 on outdoor I/F P.C. board ON).</td><td>• “OPERATION STANDBY ⏻ ” displayed

No display provided on wireless remote controller

• “HEATING STANDBY ” displayed</td></tr>
</table>

<table>
<tr><th>NO.</th><th>Item</th><th>Specification outline</th><th>Remarks</th></tr>
<tr><td>16</td><td>Selection of central control mode</td><td>1. The range of operations that can be performed via an indoor unit remote controller can be determined through the setting of the central controller.
2. Setting details
TCC-Link central control
<table>
<tr><th rowspan="2">Operation via TCC-Link central control</th><th colspan="6">Operation via RBC-AMT32E</th><th rowspan="2">RBC-AMT32E display</th></tr>
<tr><th>Start/stop selection</th><th>Operation mode selection</th><th>Timer setting</th><th>Temperature setting</th><th>Fan speed setting</th><th>Air flow direction setting</th></tr>
<tr><td>Individual</td><td>O</td><td>O</td><td>O</td><td>O</td><td>O</td><td>O</td><td rowspan="5">“CENTRAL CONTROL IN PROGRESS”</td></tr>
<tr><td>Central 1</td><td>×</td><td>O</td><td>×</td><td>O</td><td>O</td><td>O</td></tr>
<tr><td>Central 2</td><td>×</td><td>×</td><td>×</td><td>×</td><td>O</td><td>O</td></tr>
<tr><td>Central 3</td><td>O</td><td>×</td><td>O</td><td>×</td><td>O</td><td>O</td></tr>
<tr><td>Central 4</td><td>O</td><td>×</td><td>O</td><td>O</td><td>O</td><td>O</td></tr>
</table>
(O: Accessible ×: Inaccessible)</td><td>• In the case of a wired remote controller, “CENTRAL CONTROL IN PROGRESS ” is displayed (lit up) while in central control mode.
• The display blinks when a control function inaccessible to a remote controller is chosen.
• A wireless remote controller has the same set of control functions, although there is no display. When a control operation is performed via a wireless remote controller while in central control mode, a peep sound alert (5 times) is provided.</td></tr>
<tr><td>17</td><td>Louver control</td><td>1. Louver position setting
• When the louver position is changed, the louver turns all the way down before settling in the set position.
• Louver position is adjustable in the range shown in the diagrams below.
During cooling/drying

During heating/fan-only operation

• During group operation, position setting can be performed individually or collectively.
2. Swing setting
• The “SWING” sign is displayed, along with alternating images as shown below.
In all operation modes

• During group operation, swing setting can be performed individually or collectively.
3. Set louver positions
<table>
<tr><th></th><th>4-way</th><th>1-way (SH)</th><th>2-way</th><th>Under ceiling</th></tr>
<tr><td>Normal stop</td><td>Downward</td><td>Closed</td><td>Upward</td><td>Horizontal</td></tr>
<tr><td>Abnormal stop</td><td>Downward</td><td>No change</td><td>Upward</td><td>Horizontal</td></tr>
<tr><td>Heating standby</td><td>Upward</td><td>Upward</td><td>Upward</td><td>Horizontal</td></tr>
<tr><td>Oil/refrigerant recovery</td><td>Upward</td><td>Upward</td><td>No change</td><td>Horizontal</td></tr>
</table></td><td></td></tr>
<tr><td>18</td><td>DC motor</td><td>1. When the fan is turned on, the positions of the stator and rotor are determined. (The motor turns in incremental steps.)
2. The fan operates in accordance with commands issued by the indoor controller.
Note:
If the fan is rotating while the air conditioner is turned off due to an inflow of outside air or some other reason, the indoor unit may operate without turning on the fan motor.
Note:
If fan motor lock is detected, the indoor unit is turned off, with an error display provided.</td><td>Check code “P12”</td></tr>
</table>

6-1-2. Optional Connector Specifications of Indoor P.C. Board

Function	Connector No.	Pin No.	Specification	Remarks
Fan output	CN32	1	DC12V	Factory default setting: ON when indoor unit in operation and OFF when indoor unit at rest * Fan can be operated on its own by pressing FAN button on remote controller (DN = 31)
		2	Output	
HA	CN61	1	Start/stop input	Start/stop input for HA (J01: In place/Removed = Pulse input (factory default)/Step input)
		2	0V(COM)	
		3	Remote controller disabling input	Enables/disables start/stop control via remote controller
		4	In-operation output	ON during operation (HA answerback signal)
		5	DC12V(COM)	
		6	Alarm output	ON while alarm ON
Optional output	CN60	1	DC12V(COM)	
		2	Defrosting output	ON while outdoor unit defrosted
		3	Thermostat ON output	ON while real thermostat ON (compressor ON)
		4	Cooling output	ON while air conditioner in cooling or related operation (COOL, DRY or cooling under AUTO mode)
		5	Heating output	ON while air conditioner in heating operation (HEAT or heating under AUTO mode)
		6	Fan output	ON while indoor fan ON (air cleaner in use or via interlock wiring)
External error input	CN80	1	DC12V(COM)	Generates test code L30 and automatically shuts down air conditioner (only if condition persists for 1 minute)
		2	DC12V(COM)	
		3	External error input	
FILTER Optional error	CN70	1	"FILTER/optional/humidifier setting" input	Factory default setting to be humidifier (evaporative + drain pump OFF) Used for control of optional error input (display of action of protective device for equipment connected externally) * "Optional error input" setting to be performed via the remote controller (DN = 24)
		2	0V	
CHK Operation check	CN71	1	Check mode input	Used for indoor operation check (prescribed operational status output, such as indoor fan "H" or drain pump ON, to be generated without communication with outdoor unit or remote controller)
		2	0V	
DISP Display mode	CN72	1	Display mode input	Product display mode - Communication just between indoor unit and remote controller enabled (upon turning on of power) Timer short-circuited out (always)
		2	0V	
EXCT Demand	CN73	1	Demand input	Imposes thermostat OFF on indoor unit
		2	0V	

6-1-3. Test Operation of Indoor Unit

▼ Check function for operation of indoor unit (Functions at indoor unit side)

This function is provided to check the operation of the indoor unit singly without communication with the remote controller or the outdoor unit. This function can be used regardless of operation or stop of the system.
However, if using this function for a long time, a trouble of the equipment may be caused. Limit using this function within several minutes.

[How to operate]

1) Short-circuit CHK pin (CN71 on the indoor P.C. board).
   The operation mode differs according to the indoor unit status in that time.
   Normal time: Both float SW and fan motor are normal.
   Abnormal time: Either one of float SW or fan motor is abnormal.
2) Restricted to the normal time, if short-circuiting DISP pin (CN72 on the indoor P.C. board) in addition to short-circuit of CHK pin (CN71 on the indoor P.C. board), the minimum opening degree (30pls) can be set to the indoor PMV only.
   When open DISP pin, the maximum opening degree (1500pls) can be obtained again.

[How to clear]

Open CHK pin. While the system is operating, it stops once but automatically returns to operation after several minutes.

	Short-circuit of CHK pin		
	Normal time		**Abnormal time**
	DISP pin open	**DISP pin short circuit**	
Fan motor	(H)	(H)	Stop
Indoor PMV (*)	Max. opening degree (1500pls)	Min. opening degree (30pls)	Min. opening degree (30pls)
Louver	Horizontal	Horizontal	Immediate stop
Drain pump	ON	ON	ON
Communication	All ignored	All ignored	All ignored
P.C. board LED	Lights	Lights	Flashes

- To exchange the indoor PMV coil, set the indoor PMV to Max. opening degree.
- For the detailed positions of CHK pin (CN71 on indoor P.C. board) and DISP pin (CN72 on indoor P.C. board), refer to the indoor P.C. board MCC-1570.

6-1-4. Method to Set Indoor Unit Function DN Code

(When performing this task, be sure to use a wired remote controller.)

<Procedure> To be performed only when system at rest

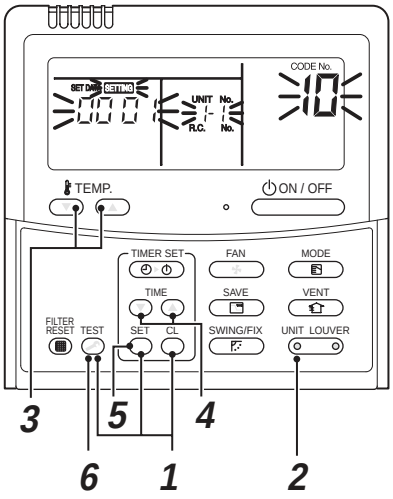

1 **Push the TEST + SET + CL buttons simultaneously and hold for at least 4 seconds.**

The unit No. displayed first is the address of the header indoor unit in group control.

Then the fan and louver of the selected indoor unit move.

2 **Each time the "Select unit" side of the UNIT LOUVER button is pressed, one of the indoor unit Nos. under group control is displayed in turn. Then the fan and louver of the selected indoor unit move.**

3 **Use the TEMP. button to select the CODE No. (DN code) of the desired function.**

4 **Use the TIME button to select the desired SET DATA associated with the selected function.**

5 **Push the SET button. (The display changes from flashing to steady.)**

- To change the selected indoor unit, go back to step ***2***.
- To change the selected function, go back to step ***3***.

6 **When the SET button is pushed, the system returns to normal off state.**

Function CODE No. (DN Code) Table (Includes All Functions Needed to Perform Applied Control on Site)

DN	Item	Description	At shipment
01	Filter display delay timer	0000: None 0001: 150H 0002: 2500H 0003: 5000H 0004: 10000H	According to type
02	Dirty state of filter	0000: Standard 0001: High degree of dirt (Half of standard time)	0000: Standard
03	Central control address	0001: No.1 unit to 0064: No.64 unit 0099: Unfixed	0099: Unfixed
04	Specific indoor unit priority	0000: No priority 0001: Priority	0000: No priority
06	Heating temp shift	0000: No shift 0001: +1°C 0002: +2°C to 0010: +10°C (Up to +6 recommended)	0002: +2°C (Floor type 0000: 0°C)
0d	Existence of [AUTO] mode	0000: Provided 0001: Not provided (Automatic selection from connected outdoor unit)	0001: Not provided
0F	Cooling only	0000: Heat pump 0001: Cooling only (No display of [AUTO] [HEAT])	0000: Heat pump
10	Type	0001: 4-way Air Discharge Cassette	Depending on model type
11	Indoor unit capacity	0000: Unfixed 0001 to 0034	According to capacity type
12	Line address	0001: No.1 unit to 0030: No.30 unit	0099: Unfixed
13	Indoor unit address	0001: No.1 unit to 0064: No.64 unit	0099: Unfixed
14	Group address	0000: Individual 0001: Header unit of group 0002: Follower unit of group	0099: Unfixed
19	Louver type (Air direction adjustment)	0000: No louver 0001: Swing only 0002: (1-way Air Discharge Cassette type, Under Ceiling type) 0003: (2-way Air Discharge Cassette type) 0004: (4-way Air Discharge Cassette type)	According to type
1E	Temp difference of [AUTO] mode selection COOL → HEAT, HEAT → COOL	0000: 0 deg to 0010: 10 deg (For setup temperature, reversal of COOL/HEAT by ± (Data value)/2)	0003: 3 deg (Ts±1.5)
28	Automatic restart of power failure	0000: None 0001: Restart	0000: None
2A	Selection of option/error input (CN70)	0000: Filter input 0001: Alarm input (Air washer, etc.) 0002: None	0002: None
2E	HA terminal (CN61) select	0000: Usual 0001: Leaving-ON prevention control 0002: Fire alarm input	0000: Usual (HA terminal)
31	Ventilating fan control	0000: Unavailable 0001: Available	0000: Unavailable
32	TA sensor selection	0000: Body TA sensor 0001: Remote controller sensor	0000: Body TA sensor
33	Temperature unit select	0000: °C (at factory shipment) 0001: °F	0000: °C
F0	Swing mode	0001: Standard 0002: Dual swing 0003: Cycle swing	0001: Standard
F1	Louver fixed position (Louver No.1)	0000: Release 0001: Horizontal discharge position 0005: Downward discharge position	0000: Not fixed
F2	Louver fixed position (Louver No.2)	0000: Release 0001: Horizontal discharge position 0005: Downward discharge position	0000: Not fixed
F3	Louver fixed position (Louver No.3)	0000: Release 0001: Horizontal discharge position 0005: Downward discharge position	0000: Not fixed
F4	Louver fixed position (Louver No.4)	0000: Release 0001: Horizontal discharge position 0005: Downward discharge position	0000: Not fixed

<table>
<tr><th>DN</th><th>Item</th><th>Description</th><th>At shipment</th></tr>
<tr><td rowspan="3">5d</td><td>High-ceiling adjustment
(Air flow selection)</td><td>1-way air discharge cassette (SH)
<table>
<tr><th>Value</th><th>Type</th><th>AP015, AP018</th><th>AP024</th></tr>
<tr><td>0000</td><td>Standard (factory default)</td><td>3.5 m or less</td><td>3.8 m or less</td></tr>
<tr><td>0001</td><td>High-ceiling (1)</td><td>4.0 m or less</td><td>4.0 m or less</td></tr>
<tr><td>0003</td><td>High-ceiling (3)</td><td>4.2 m or less</td><td>4.2 m or less</td></tr>
</table>
2-way air discharge cassette
<table>
<tr><th>Value</th><th>Type</th><th>AP007~AP030</th><th>AP036~AP056</th></tr>
<tr><td>0000</td><td>Standard (factory default)</td><td>2.7 m or less</td><td>2.7 m or less</td></tr>
<tr><td>0001</td><td>High-ceiling (1)</td><td>3.2 m or less (*)</td><td>3.0 m or less</td></tr>
<tr><td>0003</td><td>High-ceiling (3)</td><td>3.8 m or less (*)</td><td>3.5 m or less</td></tr>
</table>
* The high-ceiling installation of model AP007 to AP012 can only be undertaken when the combined capacity of the indoor units connected is 100% or less than the capacity of the outdoor unit.
Do not proceed with high-ceiling installation if this limit is exceeded.
4-way air discharge cassette
<table>
<tr><th rowspan="2">Value</th><th>Type</th><th colspan="3">AP009~AP012</th><th colspan="3">AP015~AP018</th></tr>
<tr><th>Air flow at outlet</th><th>4 directions</th><th>3 directions</th><th>2 directions</th><th>4 directions</th><th>3 directions</th><th>2 directions</th></tr>
<tr><td>0000</td><td>Standard (factory default)</td><td>2.7 m</td><td>2.8 m</td><td>3.0 m</td><td>2.8 m</td><td>3.2 m</td><td>3.5 m</td></tr>
<tr><td>0001</td><td>High-ceiling (1)</td><td>–</td><td>–</td><td>–</td><td>3.2 m</td><td>3.5 m</td><td>3.8 m</td></tr>
<tr><td>0003</td><td>High-ceiling (3)</td><td>–</td><td>–</td><td>–</td><td>3.5 m</td><td>3.8 m</td><td>–</td></tr>
<tr><td rowspan="2">Value</td><td>Type</td><td colspan="3">AP024~AP030</td><td colspan="3">AP036~AP056</td></tr>
<tr><td>Air flow at outlet</td><td>4 directions</td><td>3 directions</td><td>2 directions</td><td>4 directions</td><td>3 directions</td><td>2 directions</td></tr>
<tr><td>0000</td><td>Standard (factory default)</td><td>3.0 m</td><td>3.3 m</td><td>3.6 m</td><td>3.0 m</td><td>3.3 m</td><td>3.6 m</td></tr>
<tr><td>0001</td><td>High-ceiling (1)</td><td>3.3 m</td><td>3.5 m</td><td>3.8 m</td><td>3.3 m</td><td>3.5 m</td><td>3.8 m</td></tr>
<tr><td>0003</td><td>High-ceiling (3)</td><td>3.6 m</td><td>3.8 m</td><td>–</td><td>3.6 m</td><td>3.8 m</td><td>–</td></tr>
</table>
Under ceiling
<table>
<tr><th>Value</th><th>Type</th><th>AP015~AP056</th></tr>
<tr><td>0000</td><td>Standard (factory default)</td><td>3.5 m or less</td></tr>
<tr><td>0001</td><td>High-ceiling (1)</td><td>4.0 m or less</td></tr>
</table></td><td rowspan="3">0000: Standard</td></tr>
<tr><td>Built-in filter</td><td>2-way air discharge cassette
0000: Standard filter (factory default)
0001: Super long-life filter
4-way air discharge cassette
0000: Standard filter (factory default)
Under ceiling
0000: Standard filter (factory default)
Concealed duct standard
0000: Standard filter (factory default)
0001: High-performance filter (65%, 90%)</td></tr>
<tr><td>Static pressure selection</td><td>Concealed duct standard
0000: Standard (factory default)
0001: High static pressure 1
0003: High static pressure 2
0006: Low static pressure

Slim Duct
0000: Standard (factory default)
0001: High static pressure 1
0003: High static pressure 2
0006: High static pressure 3</td></tr>
<tr><td>60</td><td>Timer setting
(wired remote controller)</td><td>0000: Available (can be performed)

0001: Unavailable (cannot be performed)</td><td>0000: Available</td></tr>
</table>

Type
DN code “10”

Value	Type	Model
0000	1-way Air Discharge Cassette	MMU-AP∗∗∗SH
0001*[1]	4-way Air Discharge Cassette	MMU-AP∗∗∗H
0002	2-way Air Discharge Cassette	MMU-AP∗∗∗WH
0003	1-way Air Discharge Cassette (Compact)	MMU-AP∗∗∗YH
0004	Concealed Duct Standard	MMD-AP∗∗∗BH
0005	Slim Duct	MMD-AP∗∗∗SPH (SH)
0006	Concealed Duct High Static Pressure	MMD-AP∗∗∗H
0007	Under Ceiling	MMC-AP∗∗∗H
0008	High Wall	MMK-AP∗∗∗H
0010	Floor Standing Cabinet	MML-AP∗∗∗H
0011	Floor Standing Concealed	MML-AP∗∗∗BH
0013	Floor Standing	MMF-AP∗∗∗H
0014	Compact 4-way Air Discharge Cassette	MMU-AP∗∗∗MH
0015	Super Slim Duct	MMD-AP****M(P)HY
0016	Fresh Air Intake indoor unit (Duct type)	MMD-AP∗∗∗HFE
0018	Console	MML-AP****NH

*1 Default value stored in EEPROM mounted on service P.C. board

Indoor Unit Capacity
DN code “11”

Setup data	Model	
0000*	*Invalid	
0040	005 type	MMU-AP0054MH
		MMD-AP0054SPH
0041	005 type	MMU-AP0056MH
		MMD-AP0056SPH
0001	007 type	
0002	008 type	
0003	009 type	
0004	010 type	
0005	012 type	
0006	014 type	
0007	015 type	
0008	017 type	
0009	018 type	
0010	020 type	
0011	024 type	
0012	027 type	
0013	030 type	

Setup data	Model
0014	-
0015	036 type
0016	-
0017	048 type
0018	056 type
0019	-
0020	-
0021	072 type
0022	-
0023	096 type
0024	-
0025	-
0026	-
0027	-
0028	-
~	-
0034	-

*1 Default value stored in EEPROM mounted on service P.C. board

6-1-5. Applied Control of Indoor Unit

Control system using remote control interface (TCB-IFCB4E2)

Wiring and setting

- In the case of group control, the control system functions as long as it is connected to one of the indoor units (control P.C. board) in the group. If it is desired to access the operation and error statuses of other units, relevant signals must be brought to it from those units individually.

▼ Control items

(1) Start/Stop input signal	Start/stop of unit
(2) In-operation signal	Output present while unit in normal operation
(3) Error signal	Output present while alarm (e.g. serial communication error or operation of protective device for indoor/outdoor unit) being activated

▼ Wiring diagram of control system using remote control interface (TCB-IFCB4E2)

Input IFCB4E2: No-voltage ON/OFF serial signal

Output No-voltage contact (in-operation and error indication)
Contact capacity: Max. AC 240V, 0.5A

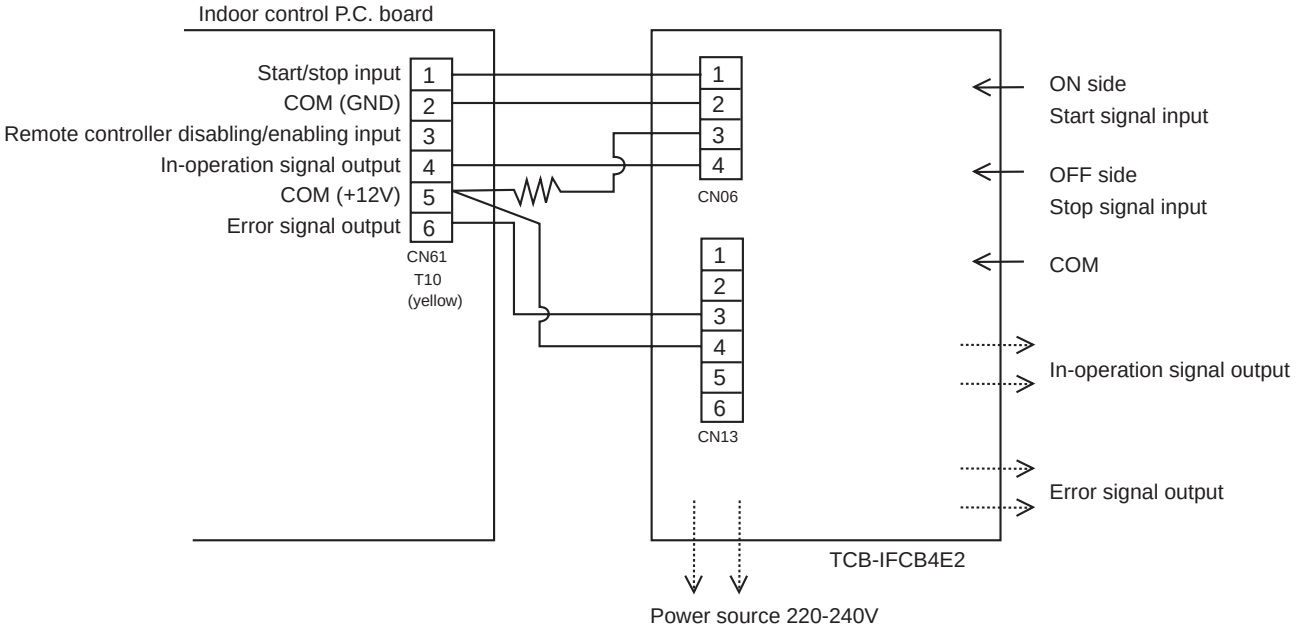

▼ Ventilating fan control from remote controller

[Function]

- The start/stop operation can be operated from the wired remote controller when air to air heat exchanger or ventilating fan is installed in the system.
- The fan can be operated even if the indoor unit is not operating.
- Use a fan which can receive the no-voltage A contact as an outside input signal.
- In a group control, the units are collectively operated and they can not be individually operated.

1. Operation

Handle a wired remote controller in the following procedure.

* Use the wired remote controller during stop of the system.

* Be sure to set up the wired remote controller to the header unit. (Same in group control)

* In a group control, if the wired remote controller is set up to the header unit, both header and follower units are simultaneously operable.

1 **Push concurrently SET + CL + TEST buttons for 4 seconds or more.**

The unit No. displayed firstly indicates the header indoor unit address in the group control.
In this time, the fan of the selected indoor unit turns on.

2 **Every pushing UNIT LOUVER button, the indoor unit numbers in group control are displayed successively.**

In this time, the fan of the selected indoor unit only turns on.

3 **Using the setup temp ▼ or ▲ button, specify the CODE No. *31*.**

4 **Using the timer time ▼ or ▲ button, select the SET DATA. (At shipment: 0000)**

The setup data are as follows:

SET DATA	Handling of operation of air to air heat exchanger or ventilating fan
0000	Unavailable (At shipment)
0001	Available

5 **Push SET button. (OK if display goes on.)**

- To change the selected indoor unit, go to the procedure ***2***).
- To change the item to be set up, go to the procedure ***3***).

6 **Pushing TEST returns the status to the usual stop status.**

2. Wiring

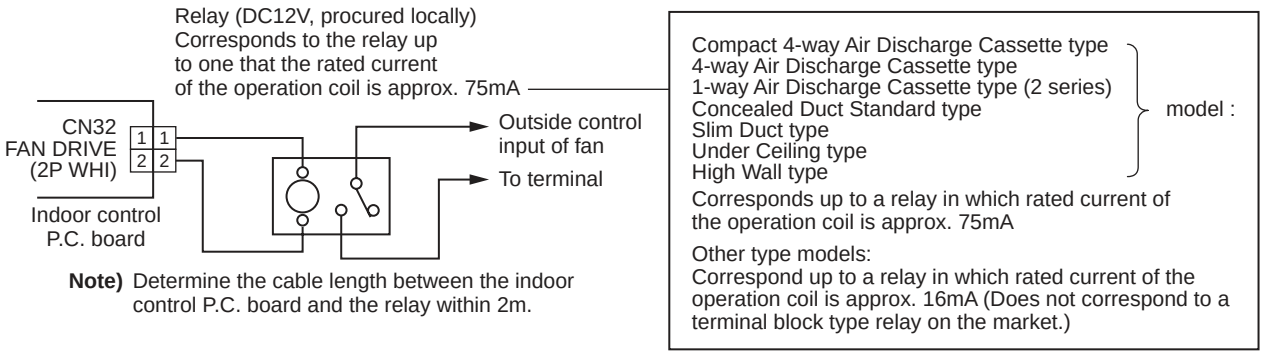

Note) Determine the cable length between the indoor control P.C. board and the relay within 2m.

▼ Leaving-ON prevention control

[Function]

- This function controls the indoor units individually. It is connected with cable to the control P.C. board of the indoor unit.
- In a group control, it is connected with cable to the indoor unit (Control P.C. board), and the CODE No. 2E is set to the connected indoor unit.
- It is used when the start operation from outside if unnecessary but the stop operation is necessary.
- Using a card switch box, card lock, etc, the forgotten-OFF of the indoor unit can be protected.
- When inserting a card, start/stop operation from the remote controller is allowed.
- When taking out a card, the system stops if the indoor unit is operating and start/stop operation from the remote controller is forbidden.

1. Control items

1) Outside contact ON: The start/stop operation from the remote controller is allowed.
(Status that card is inserted in the card switch box)

2) Outside contact OFF: If the indoor unit is operating, it is stopped forcedly.
(Start/Stop prohibited to remote controller)
(Status that card is taken out from the card switch box)

* When the card switch box does not perform the above contact operation, convert it using a relay with b contact.

2. Operation

Handle the wired remote controller switch in the following procedure.

* Use the wired remote controller switch during stop of the system.

1 **Push concurrently SET + CL + TEST buttons for 4 seconds or more.**

2 **Using the setup temp ▼ or ▲ button, specify the CODE No. 2E.**

3 **Using the timer time ▼ or ▲ button, set 0001 to the SET DATA.**

4 **Push SET button.**

5 **Push TEST button. (The status returns to the usual stop status.)**

3. Wiring

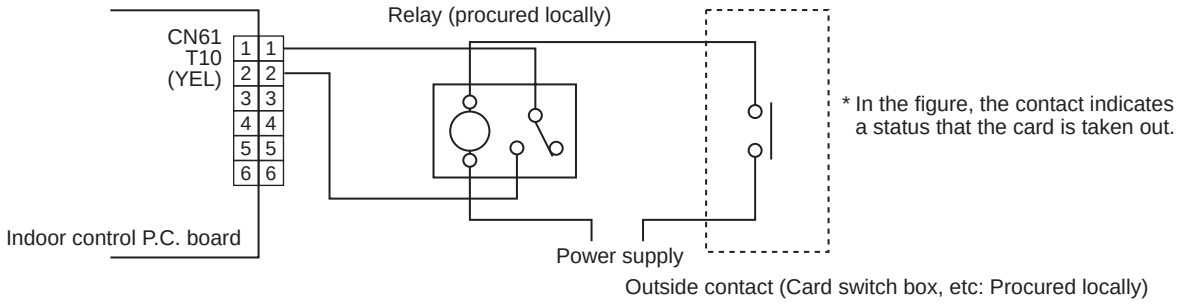

Note) Determine the cable length between the indoor control P.C. board and the relay within 2m.

▼ Power peak-cut from indoor unit

When the relay is turned on, a forced thermostat-OFF operation starts.

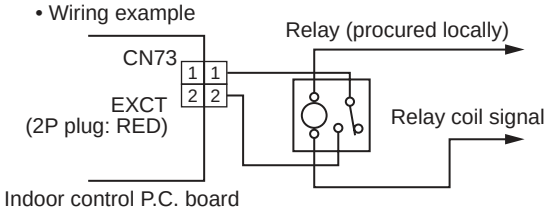

Note) Determine the cable length between the indoor or outdoor control P.C. board and the relay within 2m.

6-2. Applied Control for Outdoor Unit

The outdoor fan high static pressure support and priority operation mode setting (cooling / heating / number of units / or priority indoor unit) functions are available by setting relevant switches provided on the interface P.C. board of the outdoor unit.

6-2-1. Outdoor Fan High Static Pressure Shift

Purpose/characteristics

This function is used when connecting a duct to the discharge port of an outdoor unit (as part of, for example, unit installation on the floor by floor installation.)

Setup

Turn ON the DIP switch [SW10, Bit 2] provided on the interface P.C. board of the outdoor unit.

This function must be enabled with every discharge duct connected outdoor unit for both of the header and follower units.

Specification

Increase the speed of the propeller fan units on the outdoor fan to allow the installation of a duct with a maximum external static pressure not greater than specified in the table below. If a discharge duct with a resistance greater than 15 Pa (1.5 mmAq) is to be used, enable this function. The maximum external static pressures of single units are shown below (Table 1). In the case of combined use of multiple outdoor units, set all the units to the same maximum external static pressure as the one with the lowest maximum external static pressure (see table2).

Table 1: Maximum External Static Pressures of Single Outdoor Units

Model MMY-	MAP0806*	MAP1006*	MAP1206*	MAP14B6*	MAP10A6*	MAP12A6*	MAP1406*	MAP1608*	MAP18B6*	MAP14A6*	MAP16A6*	MAP1806*	MAP2006*	MAP2206*
Maximum external static pressure (Pa)	60	60	50	40	50	50	50	40	40	50	50	50	40	40
(*) Outdoor unit air flow (m3/h)	9700	9700	12200	12200	12200	12200	12200	12600	12600	17300	17300	17300	17900	18500

(*) Calculate duct resistance from outdoor unit air flow.

Table 2: Maximum External Static Pressures for Combined Use of Single Units

(1-1) For HT8P, HT7P, HT8P-E, T8P-E, HT8P-TR model

	Combined horsepower output	Model MMY-	Combination of outdoor units			Maximum external static pressure (Pa)
			Unit1	Unit2	Unit3	
Standard models	8	MAP0806*	MAP0806*	-	-	60
	10	MAP1006*	MAP1006*	-	-	60
	12	MAP1206*	MAP1206*	-	-	50
	14	MAP1406*	MAP1406*	-	-	50
	16	MAP1606*	MAP1606*	-	-	40
	18	MAP1806*	MAP1806*	-	-	50
	20	MAP2006*	MAP2006*	-	-	40
	22	MAP2206*	MAP2206*	-	-	40
	24	AP2416*	MAP1206*	MAP1206*	-	50
	26	AP2616*	MAP1406*	MAP1206*	-	50
	28	AP2816*	MAP1606*	MAP1206*	-	40
	30	AP3016*	MAP1606*	MAP1406*	-	40
	32	AP3216*	MAP1606*	MAP1606*	-	40
	34	AP3416*	MAP1806*	MAP1606*	-	40
	36	AP3616*	MAP2006*	MAP1606*	-	40
	38	AP3816*	MAP2206*	MAP1606*	-	40
	40	AP4016*	MAP2006*	MAP2006*	-	40
	42	AP4216*	MAP2206*	MAP2006*	-	40
	44	AP4416*	MAP2206*	MAP2206*	-	40
	46	AP4616*	MAP1606*	MAP1606*	MAP1406*	40
	48	AP4816*	MAP1606*	MAP1606*	MAP1606*	40
	50	AP5016*	MAP1806*	MAP1606*	MAP1606*	40
	52	AP5216*	MAP2006*	MAP1606*	MAP1606*	40
	54	AP5416*	MAP2206*	MAP1606*	MAP1606*	40
	56	AP5616*	MAP2006*	MAP2006*	MAP1606*	40
	58	AP5816*	MAP2206*	MAP2006*	MAP1606*	40
	60	AP6016*	MAP2206*	MAP2206*	MAP1606*	40
High efficiency models	20	AP2026*	MAP1006*	MAP1006*	-	60
	22	AP2226*	MAP1206*	MAP1006*	-	50
	36	AP3626*	MAP1206*	MAP1206*	MAP1206*	50
	38	AP3826*	MAP1406*	MAP1206*	MAP1206*	50
	40	AP4026*	MAP1406*	MAP1406*	MAP1206*	50
	42	AP4226*	MAP1406*	MAP1406*	MAP1406*	50
	44	AP4426*	MAP1606*	MAP1406*	MAP1406*	40
	54	AP5426*	MAP2006*	MAP2006*	MAP1406*	40

(1-2) For HT8P-ME, HT7P-ME model

	Combined horsepower output	Model MMY-	Combination of outdoor units			Maximum external static pressure (Pa)
			Unit1	Unit2	Unit3	
Standard models	8	MAP0806*	MAP0806*	-	-	60
	10	MAP1006*	MAP1006*	-	-	60
	12	MAP1206*	MAP1206*	-	-	50
	14	MAP1406*	MAP1406*	-	-	50
	16	MAP1606*	MAP1606*	-	-	40
	18	MAP1806*	MAP1806*	-	-	50
	20	MAP2006*	MAP2006*	-	-	40
	22	AP2216*	MAP1206*	MAP1006*	-	50
	24	AP2416*	MAP1206*	MAP1206*	-	50
	26	AP2616*	MAP1406*	MAP1206*	-	50
	28	AP2816*	MAP1406*	MAP1406*	-	50
	30	AP3016*	MAP1606*	MAP1406*	-	40
	32	AP3216*	MAP1606*	MAP1606*	-	40
	34	AP3416*	MAP1806*	MAP1606*	-	40
	36	AP3616*	MAP1806*	MAP1806*	-	50
	38	AP3816*	MAP2006*	MAP1806*	-	40
	40	AP4016*	MAP2006*	MAP2006*	-	40
	42	AP4216*	MAP1406*	MAP1406*	MAP1406*	50
	44	AP4416*	MAP1606*	MAP1406*	MAP1406*	40
	46	AP4616*	MAP1606*	MAP1606*	MAP1406*	40
	48	AP4816*	MAP1606*	MAP1606*	MAP1606*	40
	50	AP5016*	MAP1806*	MAP1606*	MAP1606*	40
	52	AP5216*	MAP1806*	MAP1806*	MAP1606*	40
	54	AP5416*	MAP2006*	MAP2006*	MAP1406*	40
	56	AP5616*	MAP2006*	MAP2006*	MAP1606*	40
High efficiency models	16	AP1626*	MAP0806*	MAP0806*	-	60
	18	AP1826*	MAP1006*	MAP0806*	-	60
	20	AP2026*	MAP1006*	MAP1006*	-	60
	30	AP3026*	MAP1006*	MAP1006*	MAP1006*	60
	32	AP3226*	MAP1206*	MAP1006*	MAP1006*	50
	34	AP3426*	MAP1206*	MAP1206*	MAP1006*	50
	38	AP3826*	MAP1406*	MAP1206*	MAP1206*	50
	40	AP4026*	MAP1406*	MAP1406*	MAP1206*	50

(1-3) For HT8P-A model

	Combined horsepower output	Model MMY-	Combination of outdoor units			Maximum external static pressure (Pa)
			Unit 1	Unit 2	Unit 3	
Standard models	8	MAP0806*	MAP0806*	–	–	60
	10	MAP1006*	MAP1006*	–	–	60
	12	MAP1206*	MAP1206*	–	–	50
	14	MAP1406*	MAP1406*	–	–	50
	16	MAP1606*	MAP1606*	–	–	40
	18	MAP1806*	MAP1806*	–	–	50
	20	MAP2006*	MAP2006*	–	–	40
	22	AP2216*	MAP1206*	MAP1006*	–	50
	24	AP2416*	MAP1206*	MAP1206*	–	50
	26	AP2616*	MAP1406*	MAP1206*	–	50
	28	AP2816*	MAP1606*	MAP1206*	–	40
	30	AP3016*	MAP1606*	MAP1406*	–	40
	32	AP3216*	MAP1606*	MAP1606*	–	40
	34	AP3416*	MAP1806*	MAP1606*	–	40
	36	AP3616*	MAP2006*	MAP1606*	–	40
	38	AP3816*	MAP2006*	MAP1806*	–	40
	40	AP4016*	MAP2006*	MAP2006*	–	40
	42	AP4216*	MAP1606*	MAP1406*	MAP1206*	40
	44	AP4416*	MAP1606*	MAP1606*	MAP1206*	40
	46	AP4616*	MAP1606*	MAP1606*	MAP1406*	40
	48	AP4816*	MAP1606*	MAP1606*	MAP1606*	40
	50	AP5016*	MAP1806*	MAP1606*	MAP1606*	40
	52	AP5216*	MAP2006*	MAP1606*	MAP1606*	40
	54	AP5416*	MAP2006*	MAP2006*	MAP1406*	40
	56	AP5616*	MAP2006*	MAP2006*	MAP1606*	40
High efficiency models	20	AP2026*	MAP1006*	MAP1006*	–	60
	36	AP3626*	MAP1206*	MAP1206*	MAP1206*	50
	38	AP3826*	MAP1406*	MAP1206*	MAP1206*	50
	40	AP4026*	MAP1406*	MAP1406*	MAP1206*	50

(1-4) For T8P, T7P, T8P-SG, T8P-ID, T8P-T model

	Combined horsepower output	Model MMY-	Combination of outdoor units			Maximum external static pressure (Pa)
			Unit1	Unit2	Unit3	
Standard models	8	MAP0806*	MAP0806*	-	-	60
	10	MAP1006*	MAP1006*	-	-	60
	12	MAP1206*	MAP1206*	-	-	50
	14	MAP14B6*	MAP14B6*	-	-	50
	16	MAP1606*	MAP1606*	-	-	40
	18	MAP18B6*	MAP18B6*	-	-	40
	20	MAP2006*	MAP2006*	-	-	40
	22	MAP2206*	MAP2206*	-	-	40
	24	AP2416*	MAP1206*	MAP1206*	-	50
	26	AP2616*	MAP14B6*	MAP1206*	-	40
	28	AP2816*	MAP14B6*	MAP14B6*	-	40
	30	AP3016*	MAP1606*	MAP14B6*	-	40
	32	AP3216*	MAP1606*	MAP1606*	-	40
	34	AP3416*	MAP18B6*	MAP1606*	-	40
	36	AP3616*	MAP18B6*	MAP18B6*	-	40
	38	AP3816*	MAP2206*	MAP1606*	-	40
	40	AP4016*	MAP2206*	MAP18B6*	-	40
	42	AP4216*	MAP2206*	MAP2006*	-	40
	44	AP4416*	MAP2206*	MAP2206*	-	40
	46	AP4616*	MAP1606*	MAP1606*	MAP14B6*	40
	48	AP4816*	MAP1606*	MAP1606*	MAP1606*	40
	50	AP5016*	MAP18B6*	MAP1606*	MAP1606*	40
	52	AP5216*	MAP18B6*	MAP18B6*	MAP1606*	40
	54	AP5416*	MAP18B6*	MAP18B6*	MAP18B6*	40
	56	AP5616*	MAP2006*	MAP18B6*	MAP18B6*	40
	58	AP5816*	MAP2206*	MAP18B6*	MAP18B6*	40
	60	AP6016*	MAP2206*	MAP2206*	MAP1606*	40
High efficiency models	14	MAP1406*	MAP1406*	-	-	50
	18	MAP1806*	MAP1806*	-	-	50
	20	MAP2006*	MAP1006*	MAP1006*	-	60
	22	MAP2206*	MAP1206*	MAP1006*	-	50
	26	AP2616*	MAP1406*	MAP1206*	-	50
	28	AP2816*	MAP1406*	MAP1406*	-	50
	30	AP3016*	MAP1606*	MAP1406*	-	40
	34	AP3416*	MAP1806*	MAP1606*	-	40
	36	AP3616*	MAP1206*	MAP1206*	MAP1206*	50
	38	AP3816*	MAP1406*	MAP1206*	MAP1206*	50
	40	AP4016*	MAP1406*	MAP1406*	MAP1206*	50
	42	AP4216*	MAP1406*	MAP1406*	MAP1406*	50
	44	AP4416*	MAP1606*	MAP1406*	MAP1406*	40
	46	AP4616*	MAP1606*	MAP1606*	MAP1406*	40
	50	AP5016*	MAP1806*	MAP1606*	MAP1606*	40
	52	AP5216*	MAP2006*	MAP1606*	MAP1606*	40
	54	AP5416*	MAP2006*	MAP2006*	MAP1406*	40
	56	AP5616*	MAP2006*	MAP2006*	MAP1606*	40
	58	AP5816*	MAP2206*	MAP2006*	MAP1606*	40

(1-5) For HT8P-C model

	Combined horsepower output	Model MMY-	combination of outdoor units			Maximum external static pressure (Pa)
			Unit1	Unit2	Unit3	
Standard models	16	MAP1606*	MAP1606*	-	-	40
	18	MAP1806*	MAP1806*	-	-	50
	20	MAP2006*	MAP2006*	-	-	40
	22	MAP2206*	MAP2206*	-	-	40
	34	AP3416*	MAP1806*	MAP1606*	-	40
	36	AP3616*	MAP2006*	MAP1606*	-	40
	38	AP3816*	MAP2206*	MAP1606*	-	40
	40	AP4016*	MAP2006*	MAP2006*	-	40
	42	AP4216*	MAP2206*	MAP2006*	-	40
	44	AP4416*	MAP2206*	MAP2206*	-	40
	48	AP4816*	MAP1606*	MAP1606*	MAP1606*	40
	50	AP5016*	MAP1806*	MAP1606*	MAP1606*	40
	52	AP5216*	MAP2006*	MAP1606*	MAP1606*	40
	54	AP5416*	MAP2206*	MAP1606*	MAP1606*	40
	56	AP5616*	MAP2006*	MAP2006*	MAP1606*	40
	58	AP5816*	MAP2206*	MAP2006*	MAP1606*	40
	60	AP6016*	MAP2206*	MAP2206*	MAP1606*	40

6-2-2. Priority Operation Mode Setting

Purpose/characteristics

This function allows switching between priority cooling and priority heating.

Four patterns of priority operation mode setting are available as shown in the table below. Select a suitable priority mode according to the needs of the customer.

Setup

⚠ CAUTION

In the case of the priority indoor unit mode, it is necessary to set up the specific indoor unit chosen for priority operation (a single unit only).

(1) Outdoor unit setup method (header unit)

SW11		Operation
Bit 1	Bit 2	
OFF	OFF	Priority heating (factory default)
ON	OFF	Priority cooling
OFF	ON	Priority operation based on No. of units in operation (priority given to the operation mode with the largest share of units in operation)
ON	ON	Priority indoor unit (priority given to the operation mode of the specific indoor unit set up for priority operation)

(2) Indoor unit setup method for priority indoor unit mode

The setting can be changed only when the system is at rest. (Be sure to turn off the system prior to this operation.)

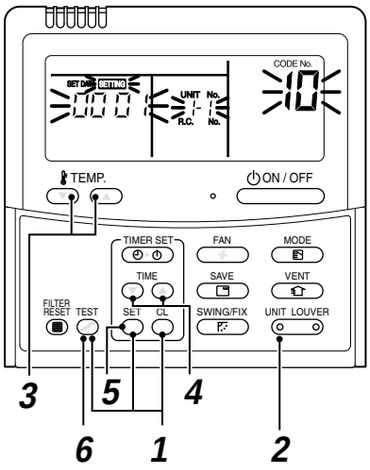

1 Push the TEST + SET + CL buttons simultaneously and hold for at least 4 seconds. The display window will start flashing in a little while.

Verify that the displayed CODE No. is 10.

¶ If the displayed CODE No. is not 10, press the TEST button to erase the display and repeat the procedure from the beginning.

(Note that the system does not respond to remote controller operation for about 1 minute after the TEST button is pushed.)

(In the case of group control, the indoor unit No. displayed first indicates the header unit.)

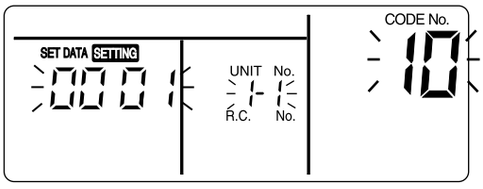

2 Each time the UNIT LOUVER button is pushed, one of the indoor unit Nos. under group control is displayed in turn. Select the indoor unit whose setting is to be changed.

The fan and flap of the selected indoor unit then come on, so that the position of this unit can be confirmed.

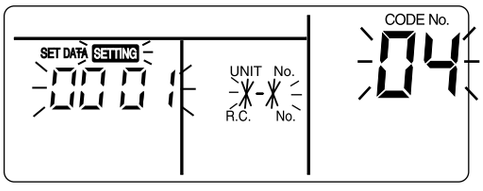

3 Use the TEMP. button to select the CODE No. 04.

4 Use the TIME button to select the SET DATA 0001.

Priority set 0001 No priority set 0000

5 Push the SET button.

The setup is finished when the display changes from flashing to steady.

6 Upon finishing the setup, push the TEST button. (This finalizes the setting.)

When the TEST button is pushed, the display goes blank, and the system returns to normal off state.

(Note that the system does not respond to remote controller operation for about 1 minute after the TEST button is pushed.)

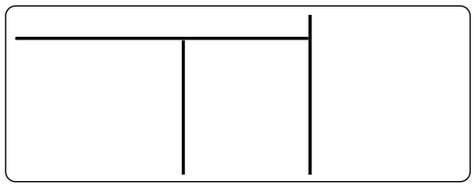

NOTE

Priority can be given to only one indoor unit. If more than one indoor unit is accidentally set to priority, an check code (L5 or L6: Duplicated indoor unit priority setting) will be displayed.

All units displaying L5 have been set to 0001 (priority). Keep the unit to which priority should be given as it is, and change the value back to 0000 (no priority) for all the rest.

Check code	Description
L5	Duplicated indoor unit priority setting (The unit is set to 0001.)
L6	Duplicated indoor unit priority setting (The unit is set to 0000.)

6-2-3. Applied Control of Outdoor Unit

Optional control P.C. boards provide access to a range of functions as listed below.

No.	Function	Outdoor unit for control P.C. board connection	Control P.C. board to be used			Outdoor unit interface P.C. board setting*			
			PCDM4E	PCMO4E	PCIN4E	Connector No.	DIP SW No.	Bit	Jumper to be removed
1	Power peak-cut Control (Standard)	Header unit	✓	–	–	CN513(blue)	SW07	1	–
	Power peak-cut Control (For one input function)	Header unit	✓	–	–	CN513(blue)	SW07	1	J16
2	Power peak-cut Control (Enhanced Functions)	Header unit	✓	–	–	CN513(blue)	SW07	1.2	–
3	Snowfall Fan Control	Header unit	–	✓	–	CN509(black)	–	–	–
4	External master ON/OFF Control	Header unit	–	✓	–	CN512(blue)	–	–	–
5	Night operation (sound reduction) Control	Header unit	–	✓	–	CN508(red)	–	–	–
6	Operation Mode Selection Control	Header unit	–	✓	–	CN510(white)	–	–	–
	Operation Mode Selection Control (forced choice)	Header unit	–	✓	–	CN510(white)	–	–	J01
7	Error/Operation output	Header unit	–	–	✓	CN511(green)	–	–	–
8	Compressor Operation Output	Individual outdoor unit	–	–	✓	CN514(green)	–	–	–
9	Operating Rate Output	Header unit	–	–	✓	CN514(green)	SW16	1	–

Layout of Outdoor Unit Interface P.C. Board

* DIP switch settings and jumper wire statuses vary from function to function.

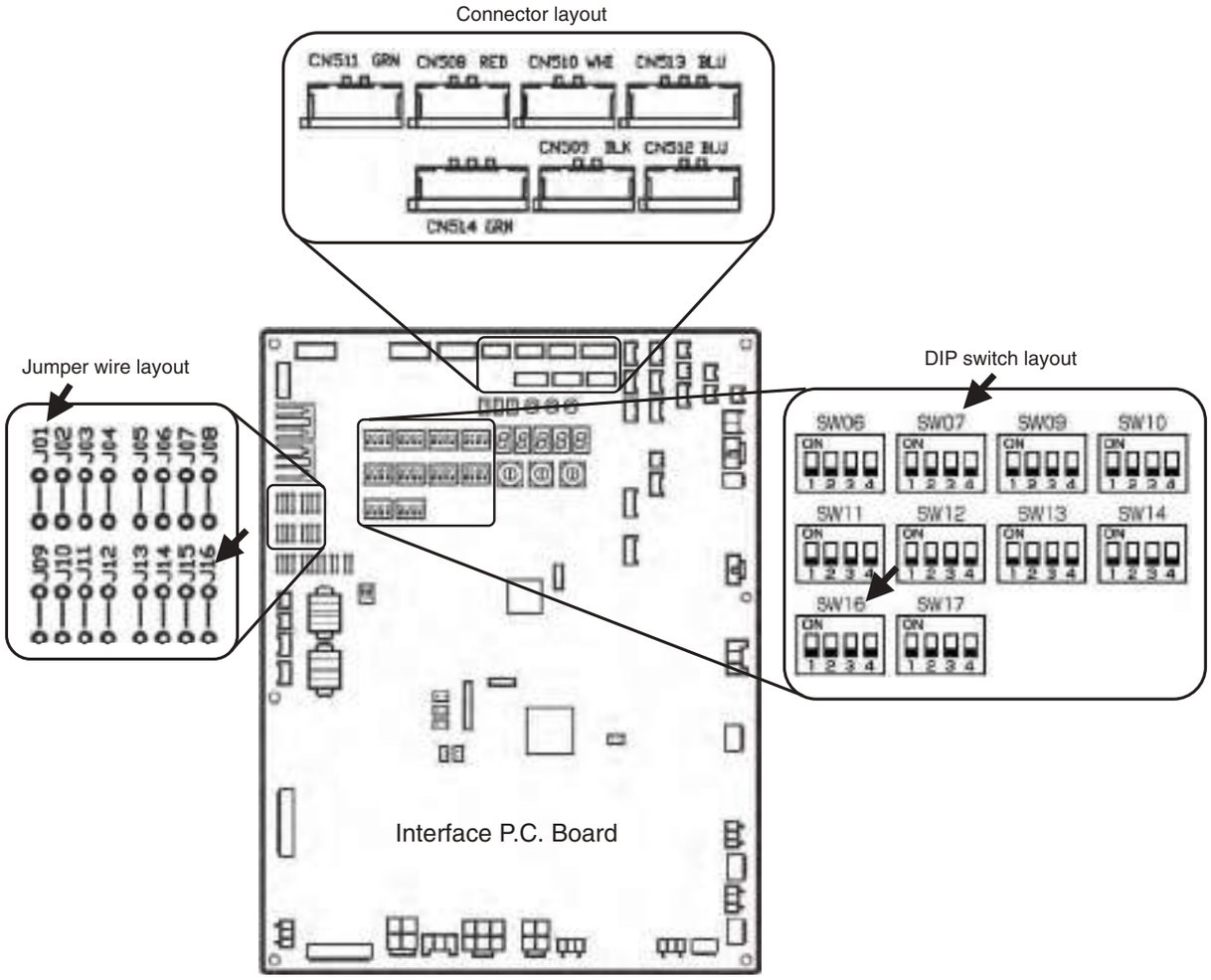

6-2-4. Power peak-cut Control (Standard)

(1) Four-core cable support

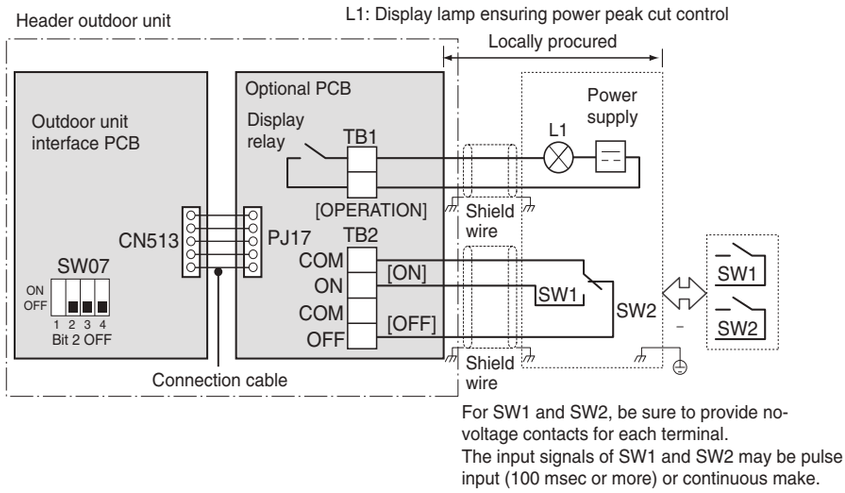

Operation

An external power peak-cut control signal limits the peak capacity of the outdoor unit.

L1: Power peak-cut control indication lamp

SW1: Power peak-cut control ON switch (ON as long as target power peak-cut control has been reached or exceeded, normally OFF)*1

SW2: Power peak-cut control OFF switch (OFF as long as target power peak-cut control has not been reached or exceeded, normally ON)*1

*1 The inputs of SW1 and SW2 can be either pulse (100 msec or longer) or step signals.
Do not turn on SW1 and SW2 simultaneously.

* Be sure to provide a contact for each terminal.

Power peak-cut control settings

Power peak-cut control P.C. board	SW1	SW2	L1	Interface P.C. board of header outdoor unit	
				SW07 Bit 1 OFF	SW07 Bit 1 ON
Power peak-cut control ON signal received	ON	OFF	ON	0% (forced stop)	60% capacity (upper limit regulated)
Power peak-cut control OFF signal received	OFF	ON	OFF	100% (normal operation)	100% (normal operation)

(2) Two-core cable support

SMMS-e models allows ON/OFF power peak-cut control to be implemented using a power peak-cut control ON input (SW1) alone, provided that the J16 jumper wire on the interface P.C. board of the header outdoor unit has been removed.

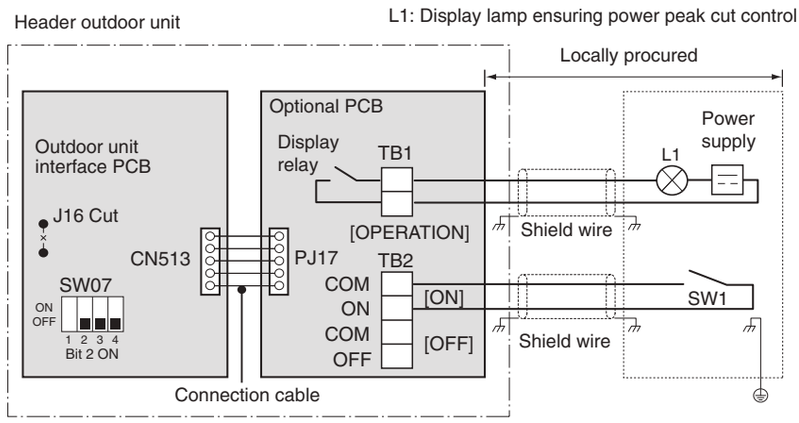

<SW07 Bit 2 OFF (two-step control)>

Power peak-cut control is enabled as long as SW1, as shown on the wiring diagram, is ON (continuously).

Jumper wire J16	Input SW1	SW07 Bit 1		Indicator relay
		Bit 1 OFF	Bit 1 ON	(L1)
Cut	OFF	100% (normal operation)	100% (normal operation)	OFF
	ON	0% (forced stop)	Approx. 60% (upper limit regulated)	ON

Note 1: Specifications of display relay contact

- The terminal for display output ([Operation] terminal) must satisfy the following electrical rating.

<Electrical Rating>
220 to 240 VAC, 10 mA or more, 1 A or less
24 VAC, 10 mA or more, 1 A or less (non-conductive load)

When connecting a conductive load (e.g. relay coil) to the display relay load, insert a surge killer CR (for an AC power supply) or a diode for preventing back electromotive force (for a DC power supply) on the bypass circuit.
The optional P.C. board should be connected to the header outdoor unit (U1).

6-2-5. Power peak-cut Control (Extended)

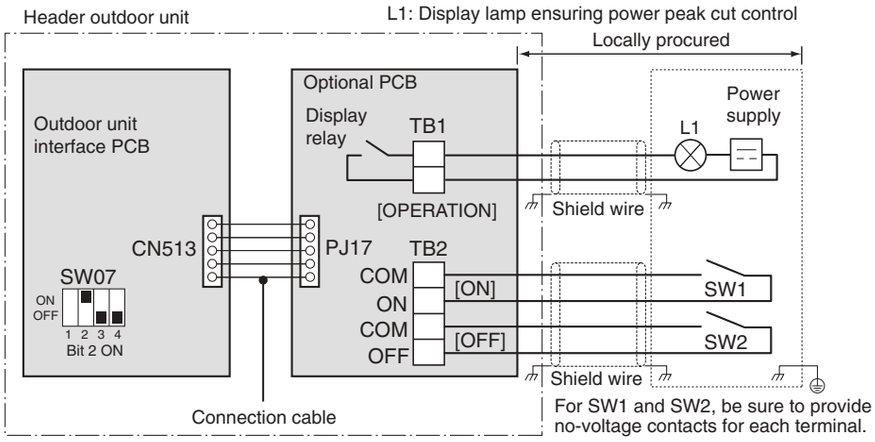

Operation

An external power peak-cut control signal limits the peak capacity of the outdoor unit.
L1: Power peak-cut control indication lamp
SW1: Power peak-cut control ON switch*1
SW2: Power peak-cut control OFF switch*1

*1 The inputs of SW1 and SW2 can be either pulse (100 msec or longer) or step signals.

* Be sure to provide a contact for each terminal.

Extended power peak-cut control settings

Specifications of display relay contact

Indication lamp	External power peak-cut control signals		Peak capacity	
			I/F SW07 Bit 1	
L1	SW1	SW2	OFF	ON
OFF	OFF	OFF	100% (normal operation)	100% (normal operation)
ON	ON	OFF	80% (upper limit regulated)	85% (upper limit regulated)
ON	OFF	ON	60% (upper limit regulated)	75% (upper limit regulated)
ON	ON	ON	0% (forced stop)	60% (upper limit regulated)

Note 1: Specifications of display relay contact

- The terminal for display output ([Operation] terminal) must satisfy the following electrical rating.

<Electrical Rating>
220 to 240 VAC, 10 mA or more, 1 A or less
24 VAC, 10 mA or more, 1 A or less (non-conductive load)

When connecting a conductive load (e.g. relay coil) to the display relay load, insert a surge killer CR (for an AC power supply) or a diode for preventing back electromotive force (for a DC power supply) on the bypass circuit.
The optional P.C. board should be connected to the header outdoor unit (U1).

6-2-6. Snowfall Fan Control

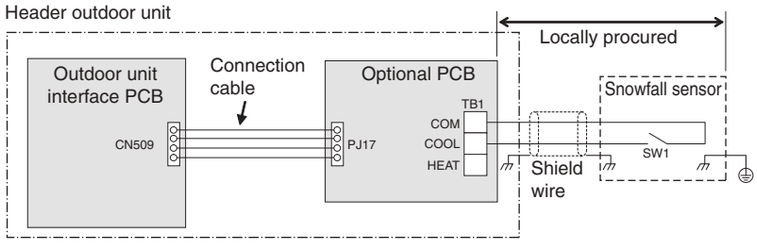

SW1: Snowfall detection switch (snowfall sensor)

Operation

An external snowfall signal turns on the outdoor unit fan.

Terminal	Input signal	Operation
COOL (SW1)	ON / OFF	All indoor units operate together
	ON / OFF	All indoor units operate together

The input signal is recognized during its rising/falling phase.
(After reaching the top/bottom of the rising/falling edge, the signal must remain there for at least 100 ms.)
The optional P.C. board should be connected to the header outdoor unit (U1).

6-2-7. External master ON/OFF Control

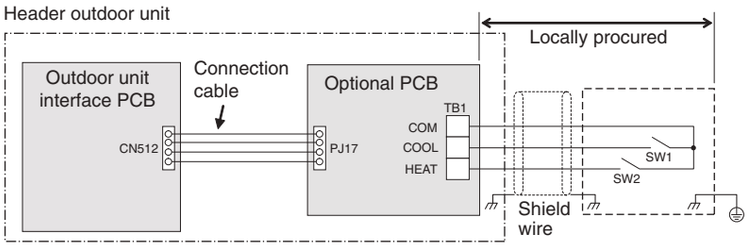

SW1: Operation input switch
SW2: Stop input switch

Operation

The system is started/stopped from the outdoor unit.

Terminal	Input signal	Operation
COOL (SW1)	ON / OFF	Turns on all indoor units
HEAT (SW2)	ON / OFF	Turns off all indoor units

The input signal is recognized during its falling phase. (After reaching the bottom of the falling edge, the signal must remain there for at least 100 ms.)

⚠ CAUTION

(1) Do not turn on the COOL (SW1) and HEAT (SW2) terminals simultaneously.
(2) Be sure to provide a contact for each terminal.
External signal: No-voltage pulse contact

The optional P.C. board should be connected to the header outdoor unit (U1).

6-2-8. Night operation (sound reduction) Control

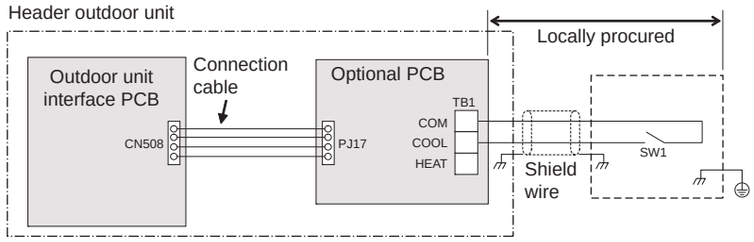

SW1: Night time signal switch

Operation

This function decreases noise at night or other times as necessary.

Terminal	Input signal	Operation
COOL (SW1)	ON / OFF	Night time control
	ON / OFF	Normal operation

The input signal is recognized during its rising/falling phase.
(After reaching the top/bottom of the rising/falling edge, the signal must remain there for at least 100 ms.)
The optional P.C. board should be connected to the header outdoor unit (U1).

The system's capacity is reduced during low-noise operation.
The table below provides a rough guide to this capacity reduction.

Model MMY-	During low-noise mode* dB(A)	Capacity	
		Cooling	Heating
MAP0806*	50	approx. 85%	approx. 80%
MAP1006*	50	approx. 70%	approx. 65%
MAP1206*	50	approx. 60%	approx. 55%
MAP14B6*	50	approx. 50%	–
MAP1406*	53	approx. 80%	approx. 80%
MAP1606*	53	approx. 70%	approx. 70%
MAP18B6*	53	approx. 60%	–
MAP1806*	54	approx. 65%	approx. 65%
MAP2006*	54	approx. 60%	approx. 60%
MAP2206*	54	approx. 55%	approx. 55%

Relative to maximum capacity

* Position of noise measuring device: 1 m from the front face of the set and 1.5 m above ground (anechoic sound)

6-2-9. Operation Mode Selection Control

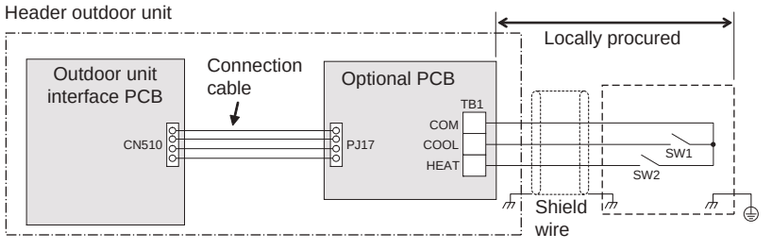

SW1: Cooling mode specified input switch
SW2: Heating mode specified input switch

NOTE

SW1: COOL mode selection switch
SW2: HEAT mode selection switch

Input signal		Operation	Remarks
COOL (SW1)	HEAT (SW2)		
ON	OFF	Only cooling operation allowed	*
OFF	ON	Only heating operation allowed	*
OFF	OFF	Normal operation	

* The display "(Operation mode selection control in progress)" appears on the remote controller

Indoor unit operation intervention function

The statuses of indoor units operating in a mode different from the selected operation mode can be changed by changing the status of a jumper wire (J01) provided on the interface P.C. board of the header outdoor unit.

Jumper lead	Details of Processing
J01 connected (factory default)	**Unallowed indoor units in a mode other than the selected operation mode are not treated as priority (thermostat OFF state). (Unallowed indoor units)**
J01 cut	**Indoor units in a mode other than the selected operation mode are forcibly switched to the selected operation mode.**

Operation Mode	Operation State	Remote control
Cooling	**Air blow operation at fan speed set on remote control**	**, indicator is displayed.**
Heating	**Air blow operation at ultra-low fan speed**	
Fan	**Regular air blow operation at fan speed set on remote control**	

PC board selection mode	Remote control operation/display	
Normal	**, , , or can be selected**	**When using the remote control, (mode select control) indicator is displayed.**
Cool	**Only , , or can be selected**	
Heat	**Only or can be selected**	

The optional P.C. board should be connected to the header outdoor unit (U1).

6-2-10. Error/Operation Output

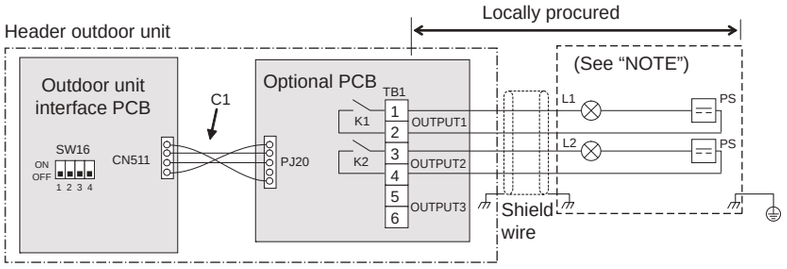

Operation

In-operation output: An in-operation indication signal is output as long as at least one indoor unit is in operation in the line.

Error output: An error indication signal is output if an error occurs in at least one indoor/outdoor unit in the line.

Note 1: Output Relay (K1, K2) Contact Specifications

- Output terminals (OUTPUT1, 2) must satisfy the following electrical rating.
- When connecting a conductive load (e.g. relay coil) to loads K1 and K2, insert a surge killer CR (for an AC power supply) or a diode for preventing back electromotive force (for a DC power supply) on the bypass circuit.

<Electrical Rating>
220-240 VAC, 10 mA or more, 1A or less
24 VAC, 10 mA or more, 1 A or less (non-conductive load)

C1	Attached connection cable 1 (4wires)
CN511	Connector on interface side (green)
K1, K2	Relays
L1	Error indication Lamp
L2	Operation indication Lamp
OUTPUT1	Error output
OUTPUT2	Operation output
PJ20	Connector on optional PCB side
PS	Power supply unit
TB1	Terminal block

The optional P.C. board should be connected to the header outdoor unit (U1).

6-2-11. Compressor Operation Output

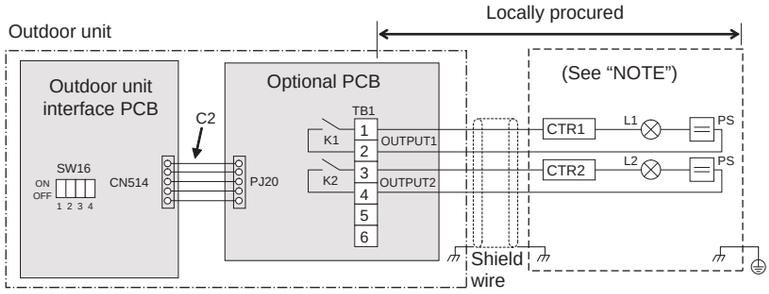

Operation

When a compressor is in operation, a relay connected to the output terminal assigned to it is turned on (closed). When it is at rest, the relay is turned off (open).

The output terminals are named OUTPUT1 and OUTPUT2 from left to right when facing the front of the outdoor unit, as shown in the diagram.

Note 1: Output Relay (K1, K2) Contact Specifications

- Output terminals (OUTPUT1, 2) must satisfy the following electrical rating.
- When connecting a conductive load (e.g. relay coil) to loads K1and K2 insert a surge killer CR (for an AC power supply) or a diode for preventing back electromotive force (for a DC power supply) on the bypass circuit.

<Electrical Rating> 220-240 VAC, 10 mA or more, 1A or less 24 VAC, 10 mA or more, 1 A or less (non-conductive load)

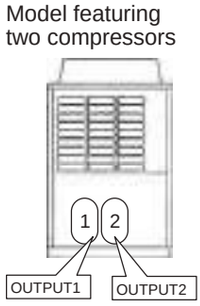

C2	Connector cable 2 (2)
CN514	Connector on interface side (green)
CTR1	Elapsed operation counter 1
CTR2	Elapsed operation counter 2
K1, K2	Relays
L1, L2	Operation indication LEDs
OUTPUT1	Compressor 1 operation output terminal
OUTPUT2	Compressor 2 operation output terminal
PJ20	Connector on optional PCB side
PS	Power supply unit
TB1	Terminal block

6-2-12. Operating Rate Output

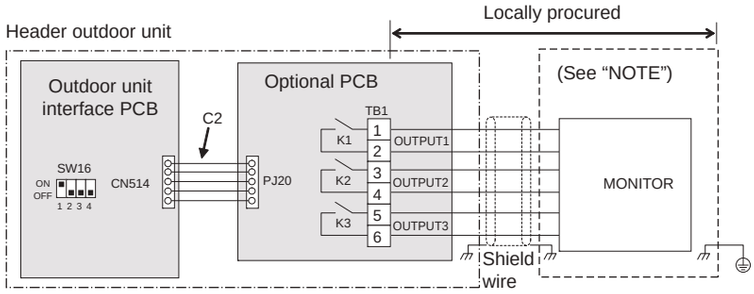

Operation

At the output terminals, a signal is present (relay closed) or absent (relay open) in various combinations according to the system operation factor, as shown in the diagram.

The operation rate (FA) is the percentage ratio of the current output of the system to the maximum output (100%).

Function	SW16	OUTPUT1	OUTPUT2	OUTPUT3	Operation factor (FA)
System operation rate output	ON OFF 1 2 3 4 Bit 1: ON Bit 2: OFF	off	off	off	FA=0%
		on	off	off	0%<FA<20%
		off	on	off	20%≦FA<35%
		on	on	off	35%≦FA<50%
		off	off	on	50%≦FA<65%
		on	off	on	65%≦FA<80%
		off	on	on	80%≦FA<95%
		on	on	on	95%≦FA

off = Relay open
on = Relay closed

C2	Connector cable 2 (2)
CN514	Connector on interface side (green)
K1, K2, K3	Relays
MONITOR	Monitoring device
OUTPUT1	Output terminal for each function
OUTPUT2	Output terminal for each function
OUTPUT3	Output terminal for each function
PJ20	Connector on optional PCB side
TB1	Terminal block

*Connect the optional P.C. board to the header outdoor unit.

Note 1: Output Relay (K1, K2, K3) Contact Specifications

- Output terminals (OUTPUT1, 2, 3) must satisfy the following electrical rating.
- When connecting a conductive load (e.g. relay coil) to loads K1, K2 and K3, insert a surge killer CR (for an AC power supply) or a diode for preventing back electromotive force (for a DC power supply) on the bypass circuit.

<Electrical Rating>
220-240 VAC, 10 mA or more, 1A or less
24 VAC, 10 mA or more, 1 A or less (non-conductive load)

7 TEST OPERATION

7-1. Procedure and Summary of Test Operation

A test operation is executed with the following procedure. When problems or an error occurs at any step, remove the causes of the problem or error referring to “8 TROUBLESHOOTING.”

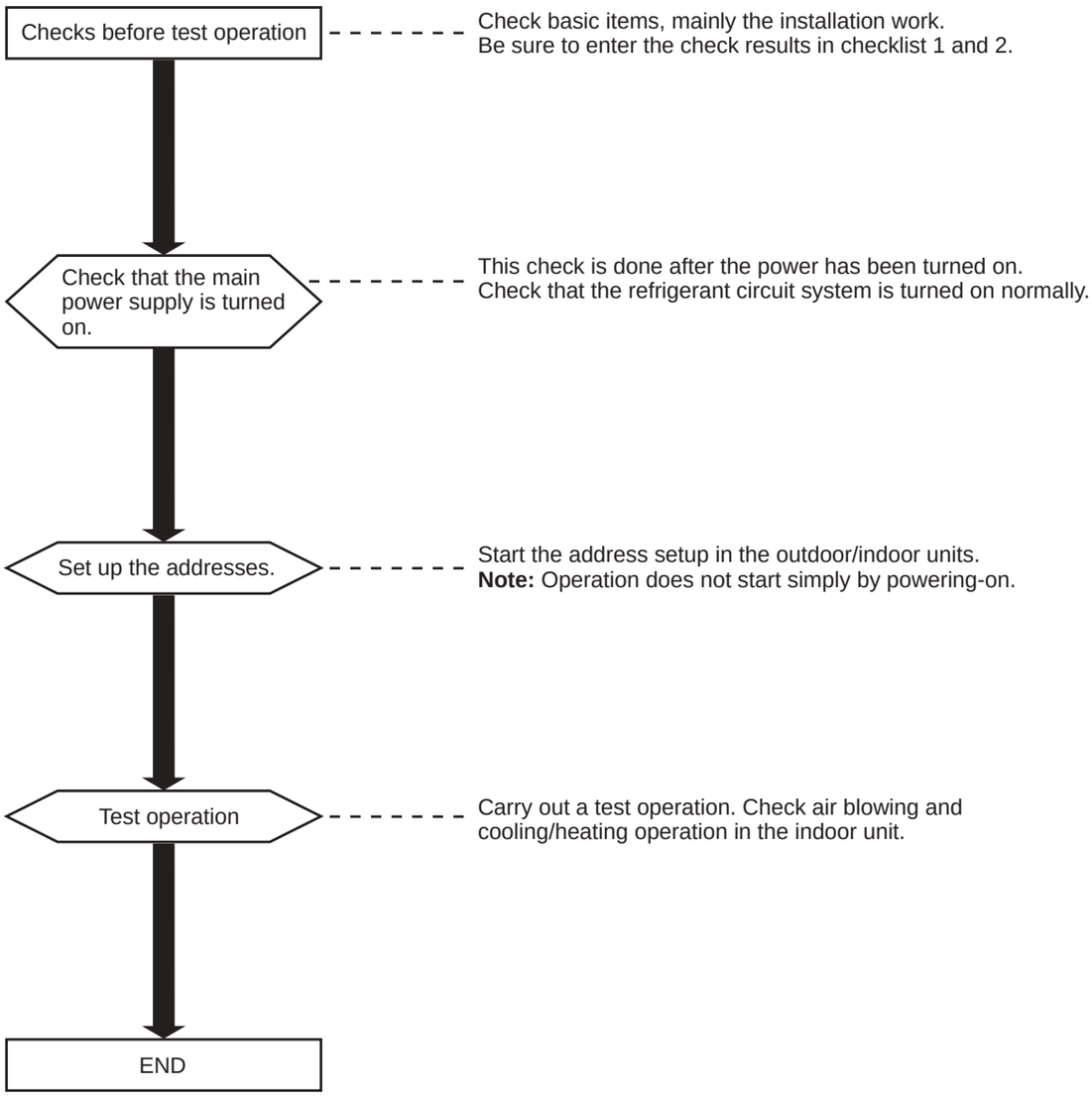

7-2. Check Items before Test Operation (before powering-on)

Prior to the test operation, check the following items to verify there are no problems with the installation work.

Main check items for electric wiring

The communication system differs from that of R22 or R407 refrigerant “Modular Multi System” air conditioners. Check wiring points again carefully.

(1) In the case that a central control system is not connected:

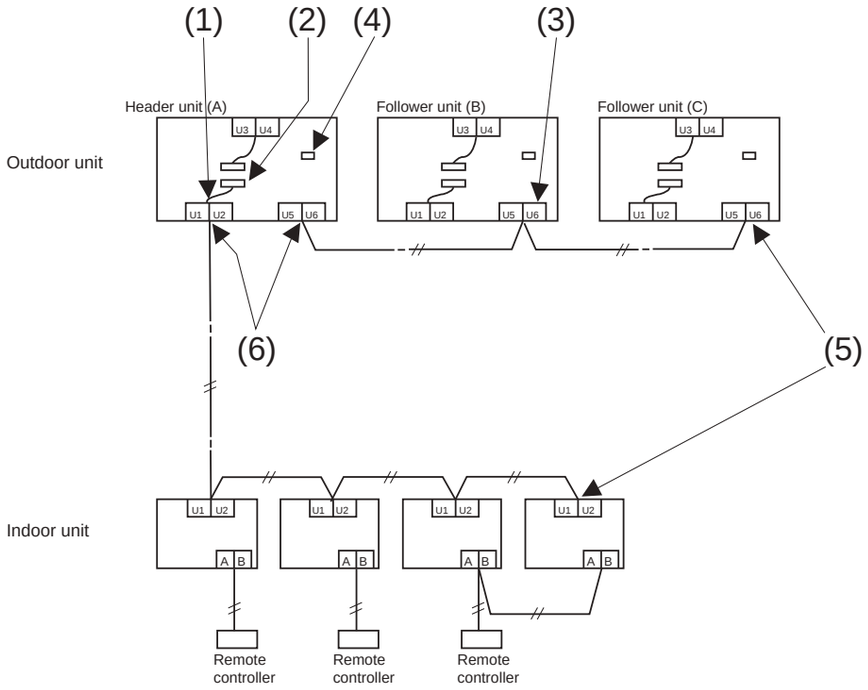

Main check items	Check
(1) Are the indoor and outdoor communication lines of the header unit connected to the U1/U2 terminals?	
(2) Is the relay connector between the U1/U2 terminal and the U3/U4 terminal disconnect? (Set up at shipment from the factory)	
(3) Is the communication line between outdoor units connected to the U5/U6 terminal?	
(4) Is the terminator resistor (SW30-bit 2) on the interface PC board of the header unit turned on? (Set up at shipment from the factory)	
(5) Is the end terminal of the shield wire open?	
(6) Is the end terminal of the shield wire earthed at the header unit side?	

NOTE

The figure above does not show all the electric wires.
For details, refer to the installation manuals for the outdoor unit, indoor unit, remote controller, or optional devices.

(2) In the case that a central control system is connected (before address setup)

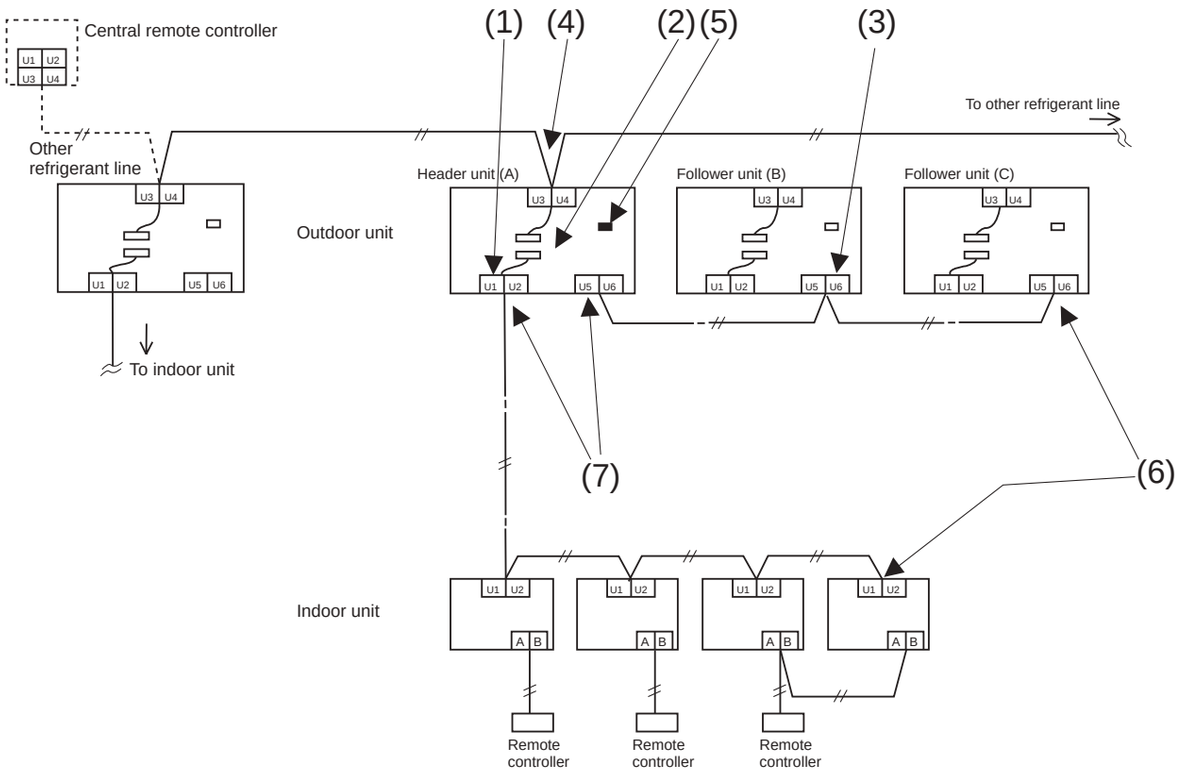

Main check items	Check
(1) Are the indoor and outdoor communication lines of the header unit connected to the U1/U2 terminals?	
(2) Is the relay connector between the U1/U2 terminal and the U3/U4 terminal disconnect? (Set up at shipment from the factory) (Keep the relay connector disconnected before address setup.)	
(3) Is the communication line between outdoor units connected to the U5/U6 terminal?	
(4) Is the communication line of the central control system connected to the header unit U3/U4 terminals of each refrigerant line? (The communication line of the central control system may be connected to the communication lines of the indoor/outdoor communication lines.)	
(5) Is the terminator resistor (SW30-bit 2) on the interface PC board of the header unit turned on? (Set up at shipment from the factory) * After address setup and test operation check, turn on the SW30-bit 2 of the header unit for the smallest line address, and turn off SW30-bit 2 of the header unit for other refrigerant lines. (See “7-4-3. Address Setup Procedure”)	
(6) Is the end terminal of the shield wire open?	
(7) Is the end terminal of the shield wire earthed at the header unit side?	
(8) When the refrigerant line and the central control system of the DI-SDI series are connected: → Are Network adapter (TCB-PCNT30TLE2) correctly connected? → When the DI-SDI series operates with group, twin, or triple operation, are the adapters connected to the header unit of the indoor unit?	

NOTE

The figure above does not show all the electric wires.
For details, refer to the installation manuals for the outdoor unit, indoor unit, remote controller, or optional devices.

Checklist 1

- Using Checklist 1, check that there are no problems with the installation work.

Is the capacity of the circuit breaker (Earth leakage breaker) appropriate?	Outdoor total capacity	☐ A	Header unit (A)	☐ A	Indoor unit	☐ A
			Follower unit (B)	☐ A		
			Follower unit (C)	☐ A		
Is the gauge of the power cable correct?			Header unit (A)	☐ mm^2	Indoor unit	☐ mm^2
			Follower unit (B)	☐ mm^2		
			Follower unit (C)	☐ mm^2		
Is the control communication line correct?			Indoor-outdoor connection terminals (U1, U2)	☐		
			Outdoor-outdoor connection terminals (U5, U6)	☐		
			Central control system connection terminals (U3, U4)	☐		
Is the power of indoor units supplied collectively?						
Is it grounded to earth?						
Is the resistance sufficient? (10 MΩ or higher)				☐ MΩ or higher		
Is the main power voltage sufficient? (within 380-415 V ±10%)				☐ V		
Is the diameter of connecting pipe correct?						
Is the branch kit correct?						
Is the water drain of the indoor unit arranged so that it flows without accumulation?						
Is the heat insulation of pipes sufficient? (connecting pipes, branch kit)						
Is there no short circuit of discharge air in the indoor/outdoor units?						
After an airtightness test of the pipes, are vacuuming and adding of refrigerant executed?						
Are the valves of all the outdoor units fully opened?				Gas side	Liquid side	Balance side
			Header unit (A)	☐	☐	☐
			Follower unit (B)	☐	☐	☐
			Follower unit (C)	☐	☐	☐

- Check the additional amount of refrigerant.

Checklist 2

Calculate the additional amount of refrigerant from the additional amount of refrigerant (A) by the pipe diameter on the liquid side, the pipe length to be connected, and the corrective amount of refrigerant (B) according to Indoor unit horsepower, and the corrective amount of refrigerant (C) according to system horsepower.

Additional amount of refrigerant = Actual liquid pipe length × Additional amount of refrigerant per 1 m of liquid pipe (A) + Corrective amount of refrigerant according to indoor unit horsepower (B) + Corrective amount of refrigerant according to system horsepower (C)

First, enter the total length for each liquid pipe diameter in the following table, and then calculate the additional amount of refrigerant by pipe length.

<Additional amount of refrigerant by pipe length>

Pipe diameter on the liquid side	Standard amount of refrigerant	Total pipe length on each liquid side m	Additional amount of refrigerant pipe diameter on each liquid side kg
φ6.4	0.025 × 1.2 ×	=	kg
φ9.5	0.055 × 1.2 ×	=	kg
φ12.7	0.105 × 1.2 ×	=	kg
φ15.9	0.160 × 1.2 ×	=	kg
φ19.0	0.250 × 1.2 ×	=	kg
φ22.2	0.350 × 1.2 ×	=	kg

Next, refer to the following table for the corrective amount of refrigerant (B) according to indoor unit horsepower.

according to indoor unit horsepower>

Additional refrigerant charge amount Indoor unit		Standard Indoor unit	Fresh Air intake Indoor unit	Air to Air Heat Exchanger with DX-coil
Additional refrigerant charge amount	kg/HP	0.4	0.2	0.2
Capacity of Indoor unit	HP	HP	HP	HP
Corrective amount of refrigerant	kg	kg	kg	kg

Next, refer to the Table 1-1~1-5 on P. 20 "Adding refrigerant" for the corrective amount of refrigerant (C) according to system horsepower.

Lastly, add the additional amount of refrigerant by pipe length (A) and the corrective amount of refrigerant by indoor unit horsepower (B) to the corrective amount of refrigerant by combined horsepower (C). This is the final additional amount of refrigerant.
If a minus sign is indicated as the result, do not reduce or add the refrigerant (= 0 kg).

<Additional amount of refrigerant>

Additional amount of refrigerant by pipe length (A) kg	kg
Corrective amount of refrigerant according to indoor unit horsepower (B) kg	kg
Corrective amount of refrigerant according to combined horsepower (C) kg	kg
Additional amount of refrigerant kg	kg

7-3. Check at Main Power-on

After turning on the main power of the indoor units and outdoor unit in the refrigerant line to conduct a test operation, check the following items in each outdoor and indoor unit.
(After turning on the main power, be sure to check in order: indoor unit → outdoor unit.)

<Check on the outdoor unit>

(1) Check that all the rotary switches, SW01, SW02, and SW03, on the interface PC board of the header unit are set to “1.”

(2) If another check code is displayed on the 7-segment display [B], remove the cause of the problem referring to Section, “8 TROUBLESHOOTING”.

(3) Check that “L08” is displayed on the 7-segment display [B] on the interface PC board of the header unit. (L08: Indoor address not set up)

(If the address setup operation has already been completed during servicing, etc., the above check code is not displayed, and only “U1” is displayed on the 7-segment display [A].)

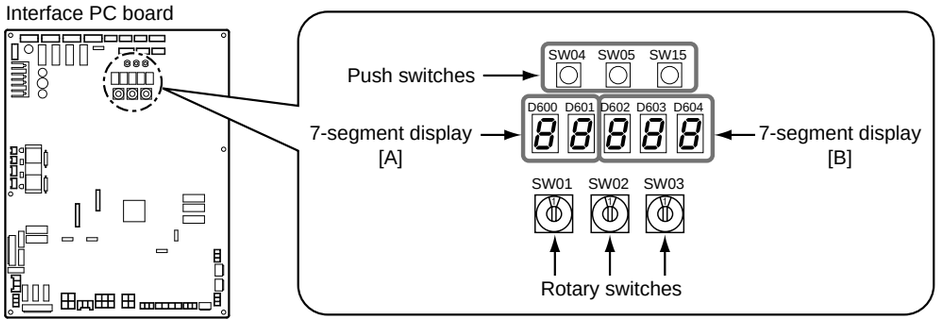

<Check on the indoor unit>

(1) Display check on the remote controller (in the case of a wired remote controller)

Check that a frame, as shown in the following figure at left, is displayed on the LC display section of the remote controller.

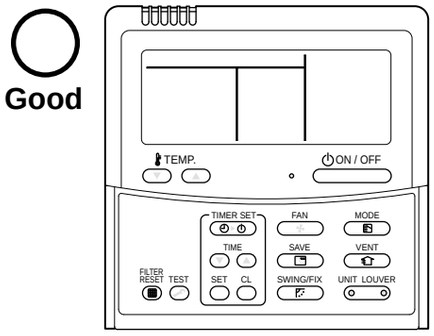

Normal status
(power supplied and operation stopped)

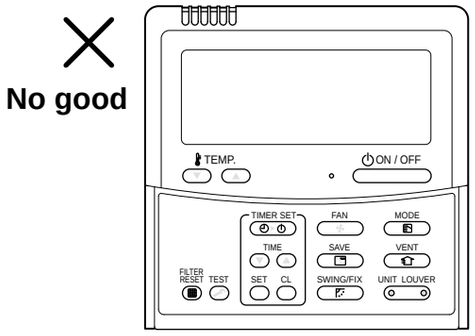

When power is not supplied normally

If no frame is displayed, as shown in the above figure at right, the remote controller does not have a normal supply of power; check the following items.

- Check the power supply of the indoor unit.
- Check the cabling between the indoor unit and the remote controller.
- Check whether there is a cutoff of wire around the indoor control PC board or not, and check for connection failures of the connectors.
- Check for failure of the transformer for the indoor electrical control box.
- Check for failure of the indoor control PC board.

7-4. Address Setup

This product requires address setup before operation.
Follow this procedure for address setup.

7-4-1. Precautions

(1) Address setup is not performed simply by turning on the power supply.
(2) For indoor units, address setup can be done either by manual address setup or by automatic address setup:
Automatic address setup: Setup from SW15 on the interface PC board of the header unit
Manual address setup: Setup from the wired remote controller. (For details, refer to “7-4-3. Address Setup Procedure.”)
(3) Automatic setup usually takes about 5 minutes per line. In some cases, however, it may take up to 10 minutes.
(4) It is unnecessary to operate the air conditioner to achieve address setup.

7-4-2. Address Setup and Check Procedure

<table>
<tr><th>Procedure</th><th>Item</th><th>Operation and check contents</th></tr>
<tr><td>1</td><td>Indoor unit power-on</td><td>Turn on the power of the indoor unit for the refrigerant line for which the address is to be set up.</td></tr>
<tr><td>2</td><td>Outdoor unit power-on</td><td>Turn on the power of all the outdoor units for the refrigerant line for which the address is to be set up.</td></tr>
<tr><td>3</td><td>7-segment display check</td><td>Check that “L08” is displayed on the 7-segment display [B] on the interface PC board of the header unit in the system where the address is to be set up.</td></tr>
<tr><td>4</td><td>Address setup start</td><td>Confirm the items in “7-4-3. Address Setup Procedure,” and then set up the address according to the operation procedure.
(Be careful to note that the setup operation may differ in group control and central control systems.)
Note:
The address cannot be set up if switches are not operated.</td></tr>
<tr><td>5</td><td>Display check after setup</td><td>• After address setup, “U1” “ ” is displayed on the 7-segment display.
• For follower outdoor units, “U2” to “U3” are displayed on the 7-segment display [A].
• If a check code is displayed on the 7-segment display [B], remove the cause of the problem referring to “8 TROUBLESHOOTING.”</td></tr>
<tr><td>6</td><td>System information check after setup</td><td>Using the 7-segment display function, check the system information of the scheduled system. (This check is executed on the interface PC board of the header unit.)
<table>
<tr><th></th><th colspan="3">Rotary switch setup</th><th colspan="2">7-segment display</th></tr>
<tr><td></td><td>SW01</td><td>SW02</td><td>SW03</td><td>[A]</td><td>[B]</td></tr>
<tr><td>System capacity</td><td>1</td><td>2</td><td>3</td><td>[Number of horsepower]</td><td>[H P]</td></tr>
<tr><td>Number of connected outdoor units</td><td>1</td><td>3</td><td>3</td><td>[Number of units]</td><td>[P]</td></tr>
<tr><td>Number of connected indoor units</td><td>1</td><td>4</td><td>3</td><td>[Number of connected units]</td><td></td></tr>
</table>
After the above checks, return rotary switches SW01, SW02, and SW03 to 1/1/1.</td></tr>
</table>

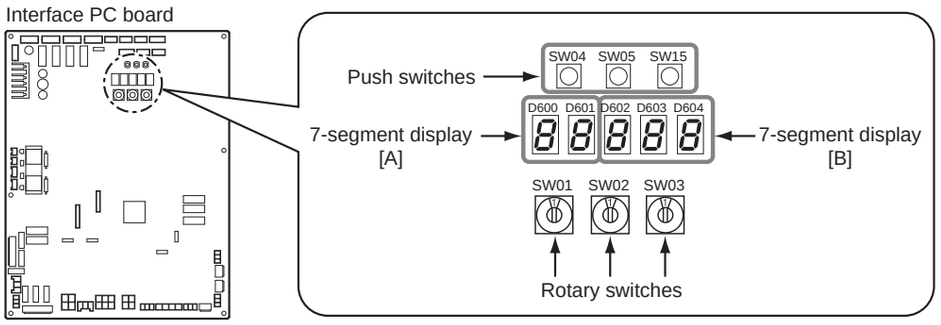

7-4-3. Address Setup Procedure

No central control: **go to Address setting procedure 1**
Central control of 2 or more refrigerant lines: **go to Address setting procedure 2**

(Example)	When controlling a single refrigerant line centrally	When controlling 2 or more refrigerant lines centrally
Address setting procedure	**To procedure 1**	**To procedure 2**
System wiring diagram	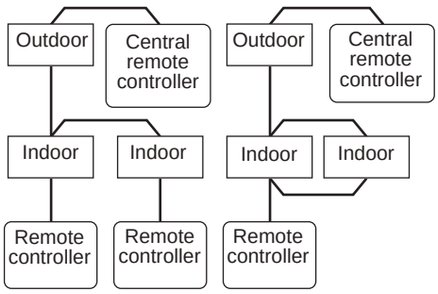	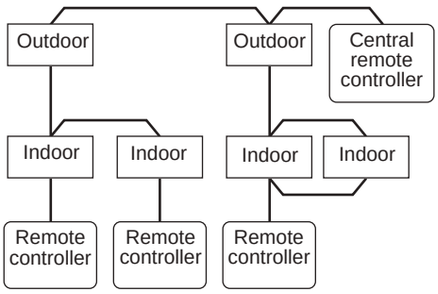

◆Address setting procedure 1

1 **Turn on indoor units first, and then turn on outdoor units.**

2 **About one minute after turning the power on, confirm that the 7-segment display on the interface P.C. board of the header outdoor unit indicates** **U. 1. L08 (U. 1. flash)** **.**

3 **Press SW 15 to start the automatic address setting.**
(It may take up to 10 minutes (normally about 5 minutes) to complete one line's setting.)

4 **The 7-segment display indicates** **Auto 1 → Auto 2 → Auto 3** **.**
After the indication, **U. 1. - - - (U. 1. flash)** **starts flashing on the display.**
When the flashing stops and **U. 1. - - - (U. 1. light)** **remain lit on the display, the setting is complete.**

Interface P.C. board on the header outdoor unit

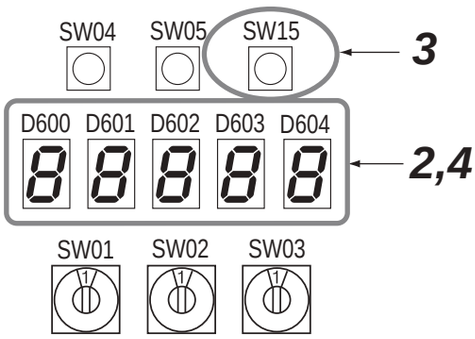

REQUIREMENT

- When 2 or more refrigerant lines are controlled as a group, be sure to turn on all the indoor units in the group before setting addresses.
- If you set the unit addresses of each line separately, each line's header indoor unit is set separately. In that case, the CODE No. "L03" (Indoor header unit overlap) is indicated as running starts. Change the group address to make one unit the header unit using wired remote controller.

(Example)	Controlling 2 or more refrigerant lines as a group
System wiring diagram	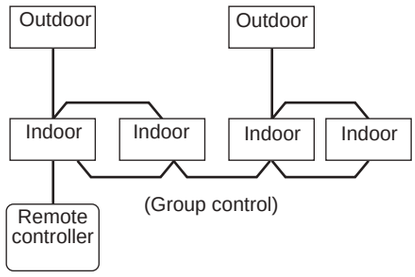

◆Address setting procedure 2

1 **Set a system address for each system using SW 13 and 14 on the interface P.C. board on the header outdoor unit of each system.**
(Factory default: Address 1)

NOTE

Be sure to set a unique address on each system. Do not use a same address as another system (refrigerant line) or a "Digital Inverter" side.

Interface P.C. board on the header outdoor unit

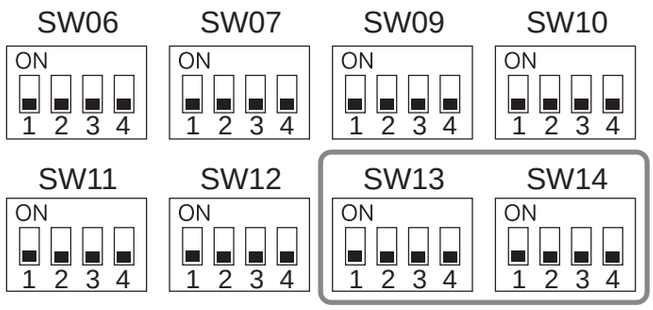

Line address switches on the outdoor interface PC board (○: switch on, ×: switch off)

Line address	SW13				SW14			
	1	2	3	4	1	2	3	4
1				×	×	×	×	×
2				×	O	×	×	×
3				×	×	O	×	×
4				×	O	O	×	×
5				×	×	×	O	×
6				×	O	×	O	×
7				×	×	O	O	×
8				×	O	O	O	×
9				×	×	×	×	O
10				×	O	×	×	O
11				×	×	O	×	O
12				×	O	O	×	O
13				×	×	×	O	O
14				×	O	×	O	O

Line address	SW13				SW14			
	1	2	3	4	1	2	3	4
15				×	×	O	O	O
16				×	O	O	O	O
17				O	×	×	×	×
18				O	O	×	×	×
19				O	×	O	×	×
20				O	O	O	×	×
21				O	×	×	O	×
22				O	O	×	O	×
23				O	×	O	O	×
24				O	O	O	O	×
25				O	×	×	×	O
26				O	O	×	×	O
27				O	×	O	×	O
28				O	O	O	×	O

Not used for setup of line address (do not change setup.)

2 **Be sure to disconnect the relay connectors between the [U1U2] and [U3U4] terminals on all the header outdoor units that will be connected to the central control. (Factory default: disconnected)**

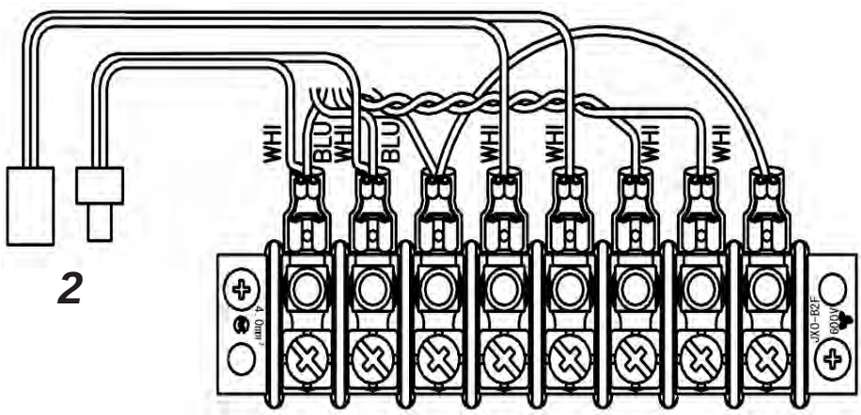

3 **Turn on indoor units first, and then turn on outdoor units.**

4 **About 1 minute after turning the power on, confirm that the 7-segment display on the interface P.C. board of the header outdoor unit indicates** U. 1. L08 (U. 1. flash) **.**

5 **Press SW 15 to start the automatic address setting.**
(It may take up to 10 minutes (normally about 5 minutes) to complete one line's setting.)

6 **The 7-segment display indicates** Auto 1 → Auto 2 → Auto 3 **.**
After the indication, U. 1. - - - (U. 1. flash) **starts flashing on the display.**
When the flashing stops and U. 1. - - - (U. 1. light) **, remains lit on the display, the setting is complete.**

7 **Repeat steps *4* to *6* for other refrigerant lines.**

8 **After completing address setting of all systems, turn off DIP switch 2 of SW30 on the interface P.C. boards of all the header outdoor units connected to the same central control, except the unit that has the smallest address.**
(For unifying the termination of the wiring for the central control of indoor and outdoor units)

9 **Connect the relay connectors between the [U1, U2] and [U3, U4] terminals of the header outdoor unit of each refrigerant line.**

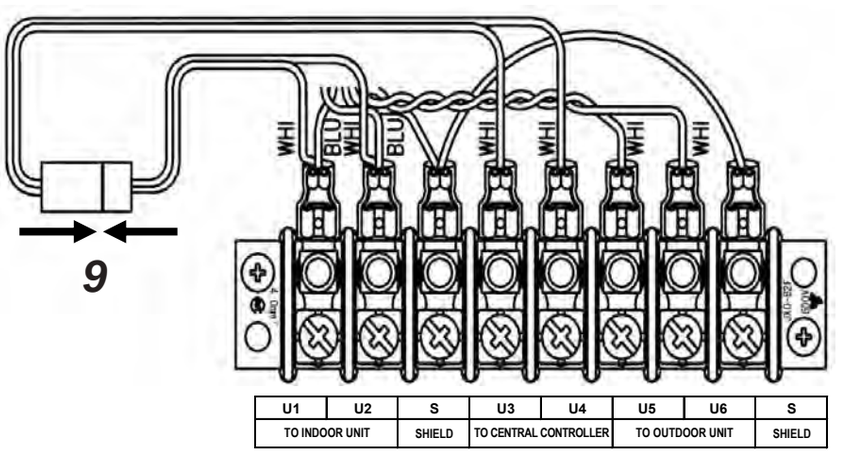

10 Set the central control address.

(For the setting of the central control address, refer to the installation manuals of the central control devices.)

Header unit interface P.C. board

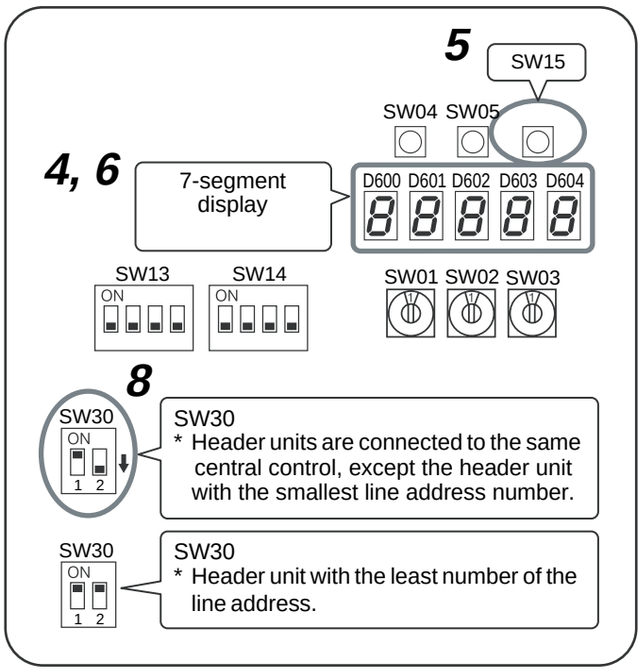

Switch setting (setting example when controlling 2 or more refrigerant lines centrally)

Outdoor units (setting manually)

*The items in bold font must be set manually.

Outdoor unit's interface P.C. board	Header unit	Follower unit	Header unit	Follower unit	Header unit	Factory default
SW13, 14 (Line (system) address)	1	(No setting required)	2	(No setting required)	3	1
DIP switch 2 of SW30 (Terminator of indoor/ outdoor communication line and central control line)	ON	(No setting required)	**Set to OFF after setting addresses.**	(No setting required)	**Set to OFF after setting addresses.**	ON
Relay connector	**Connect after setting addresses.**	Open	**Connect after setting addresses.**	Open	**Connect after setting addresses.**	Open

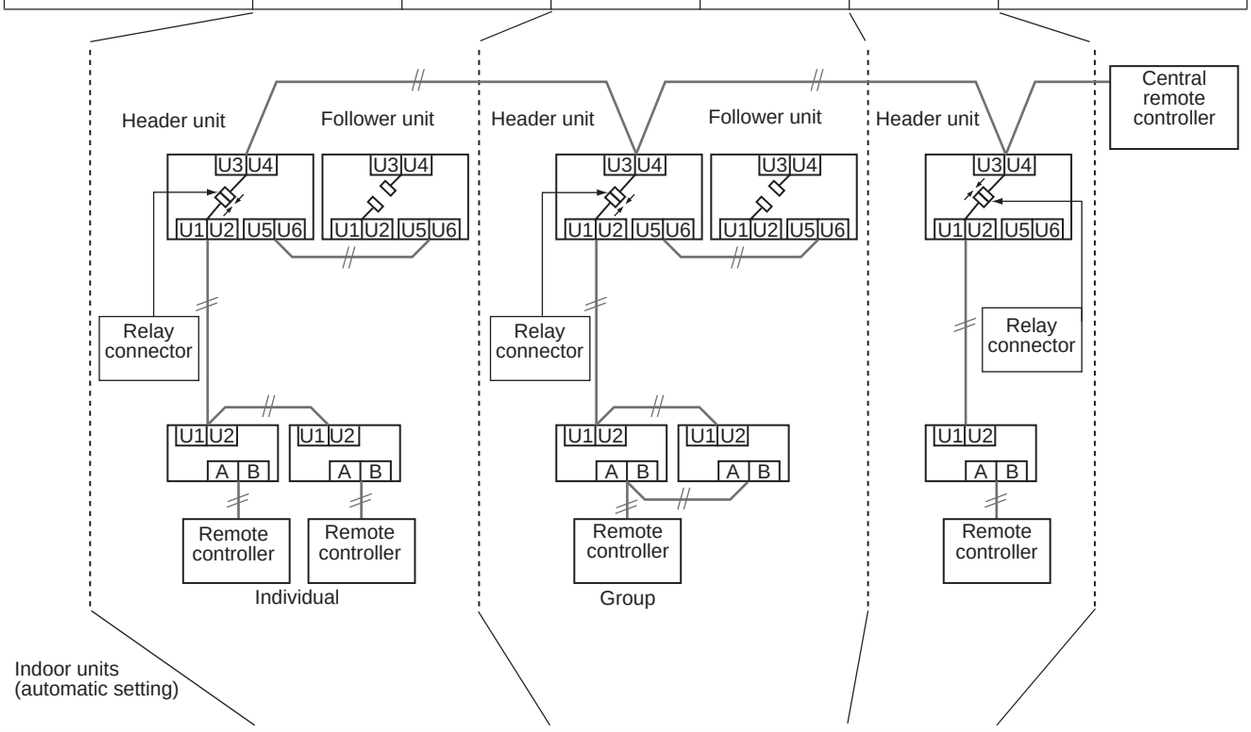

Indoor units (automatic setting)

Line (system) address	1	1	2	2	3
Indoor unit address	1	2	1	2	1
Group address	0	0	1	2	0

⚠ CAUTION

Relay connector connection

Never connect relay connectors between the [U1, U2] and [U3, U4] terminals before completing address setting of all the refrigerant lines. Otherwise, the addresses cannot be set correctly.

Manual address setup from the remote controller

With indoor wiring work completed and outdoor wiring work not done—in cases where indoor unit addresses are decided in advance from the wired remote controller, or in cases where addresses are change after address setup.

(Wiring example for 2 refrigerant lines)

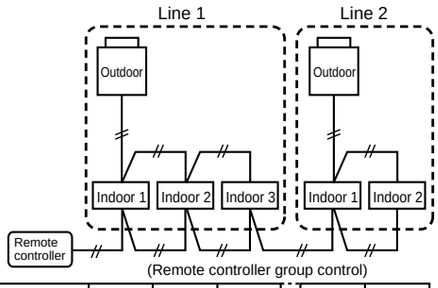

Line address	1	1	1	2	2
Indoor address	1	2	3	1	2
Group address	1 Header	2 Follower	2 Follower	2 Follower	2 Follower

In the above example, where remote controllers are not yet wired, set the address manually after individually connecting the wired remote controller.

(Wiring during manual address setup)

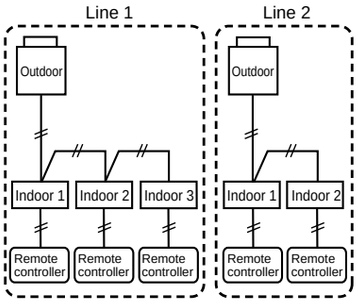

After address setup, return to the original wiring over remote controllers.

Group address

Individual: 0000
Header unit: 0001
Follower unit: 0002
} In cases of remote controller group control

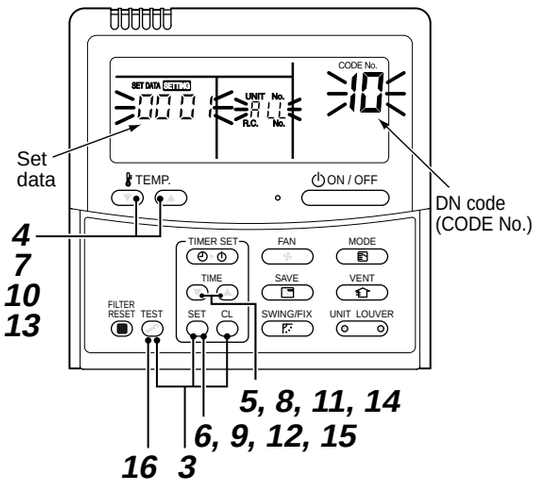

1 **Arrange one indoor unit and one remote controller set to 1 by 1.**

2 **Turn on the power.**

3 **Push the SET + CL + TEST buttons simultaneously for 4 seconds or more.**
LCD begins blinking.

▼(Refrigerant line address)

4 **Using the TEMP. buttons, set the DN code to 12.**

5 **Using the TIME buttons, set up the line address (match it with the line address on the interface PC board of the header unit on the same refrigerant line).**

6 **Push the SET button (OK when the display goes on).**

▼(Indoor address)

7 **Using the TEMP. buttons, set the DN code to 13.**

8 **Using the TIME buttons, set up the indoor address. (0001~0064)**

9 **Push the SET button (OK when the display goes on).**

▼(Group address)

10 **Using the TEMP. buttons, set the DN code to 14.**

11 **Using the TIME buttons, set Individual = 0000, Header unit = 0001, Follower unit = 0002.**

12 **Push the SET button (OK when the display goes on).**

▼(Central control address)

13 **Using the TEMP. buttons, set DN code to 03.**

14 **Using the TIME buttons, set up the central control address. (0001~0064)**

15 **Push SET button. (OK when display goes on).**

16 **Push the TEST button.**
Setup is finished (“Setting up” blinks; when “Setting up” goes off, operation is possible).

17 **Return to the original wiring over remote controllers.**

NOTE

(1) When setting the line address from the remote controller, do not use addresses 29 and 30.
Addresses 29 and 30 cannot be set up on the outdoor unit. If they are incorrectly used, the code “E04” (indoor/outdoor communication circuit error) is output.

(2) When manual address setup has been done from a remote controller, and central control over refrigerant lines is to be done, setup the header unit of each line as follows:
- Using SW13 and SW14 on the interface PC board of the header unit of each line, setup the line address for each line.
- Except for the line with the smallest line address number, set SW03-bit 2 to “off” for the interface PC board of the header unit of lines connected to the same central control (put the terminator resistor of the central control line, indoors and outdoors, into one).
- Connect the relay connector between U1/U2 and U3/U4 of the header unit for each refrigerant line.
- After that, set up the central control address. (For central control address setup, refer to the installation manual of the central control devices.)

■ Confirming the indoor unit addresses and the position of an indoor unit using the remote controller

◆ Confirming the numbers and positions of indoor units

To see the indoor unit address of an indoor unit which you know the position of

▼ When the unit is individual (the indoor unit is paired with a wired remote controller one-to-one), or it is a group-controlled one.

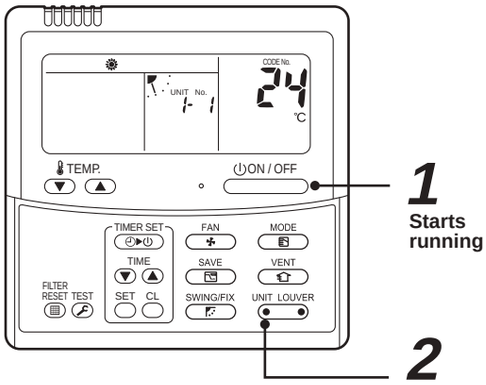

(Execute it while the units are running.)

1 Push the ON / OFF button if the units stop.

2 Push the UNIT LOUVER button (left side of the button).

A unit numbers 1-1 is indicated on the LCD (it will disappear after a few seconds). The indicated number shows the system address and indoor unit address of the unit.

When 2 or more indoor units are connected to the remote controller (group-controlled units), a number of other connected units appears each time you push the UNIT LOUVER button (left side of the button).

To find an indoor unit's position from its address

▼When checking unit numbers controlled as a group

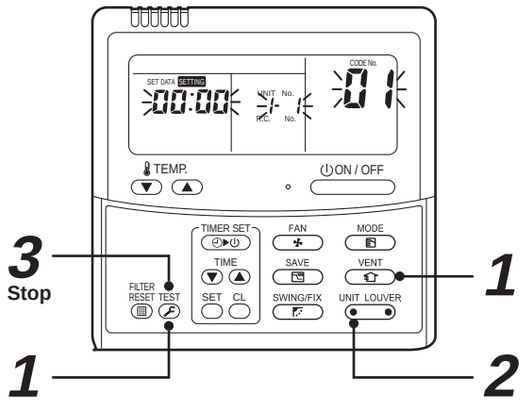

(Execute it while the units are stopped.)
The indoor unit numbers in a group are indicated one after another. The fan and louvers of the indicated units are activated.

1 Push and hold the VENT and TEST buttons at the same time for more than 4 seconds.
- ALL appears on UNIT No. on the LCD display.
- The fans and louvers of all the indoor units in the group are activated.

2 Push the UNIT LOUVER button (left side of the button). Each time you push the button, the indoor unit numbers are indicated one after another.
- The first-indicated unit number is the address of the header unit.
- Only the fan and louvers of the indicated indoor unit are activated.

3 Push the TEST button to finish the procedure.
All the indoor units in the group stop.

▼To check all the indoor unit addresses using an arbitrary wired remote controller. (When communication wirings of 2 or more refrigerant lines are interconnected for central control)

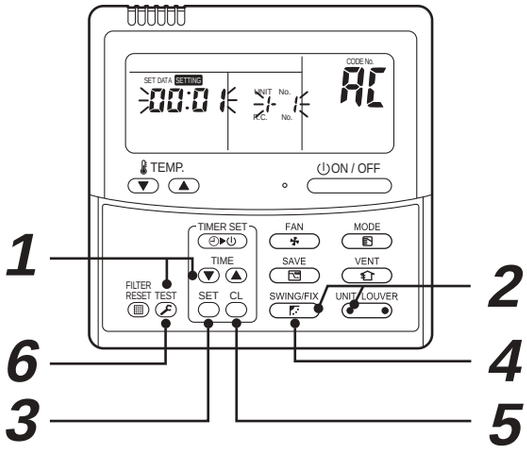

(Execute it while the units are stopped.)
You can check indoor unit addresses and positions of the indoor units in a single refrigerant line.
When an outdoor unit is selected, the indoor unit numbers of the refrigerant line of the selected unit are indicated one after another and the fan and louvers of the indicated indoor units are activated.

1 **Push and hold the TIME ▼ and TEST buttons at the same time for more than 4 seconds.**
At first, the line 1 and CODE No. AC (Address Change) are indicated on the LCD display. (Select an outdoor unit.)

2 **Push the UNIT LOUVER (left side of the button) and SWING/FIX buttons repeatedly to select a system address.**

3 **Push the SET button to confirm the system address selection.**
- The address of an indoor unit connected to the selected refrigerant line is indicated on the LCD display and its fan and louvers are activated.

4 **Push the UNIT LOUVER button (left side of the button). Each time you push the button, the indoor unit numbers of the selected refrigerant line are indicated one after another.**
- Only the fan and louvers of the indicated indoor unit are activated.

◆To select another system address

5 **Push the CL button to return to step *2*.**
- After returning to step ***2***, select another system address and check the indoor unit addresses of the line.

6 **Push the TEST button to finish the procedure.**

■Changing the indoor unit address using a remote controller

To change an indoor unit address using a wired remote controller.

▼The method to change the address of an individual indoor unit (the indoor unit is paired with a wired remote controller one-to-one), or an indoor unit in a group.
(The method is available when the addresses have already been set automatically.)

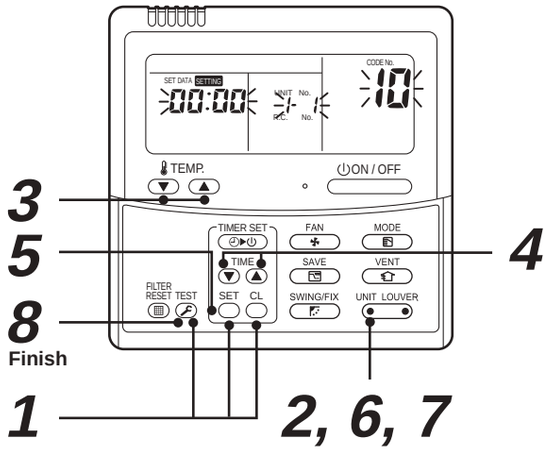

(Execute it while the units are stopped.)

1 **Push and hold the SET, CL, and TEST buttons at the same time for more than 4 seconds.**
(If 2 or more indoor units are controlled in a group, the first indicated UNIT No. is that of the head unit.)

2 **Push the UNIT LOUVER button (left side of the button) repeatedly to select an indoor unit number to change if 2 or more units are controlled in a group. (The fan and louvers of the selected indoor unit are activated.)**
(The fan of the selected indoor unit is turned on.)

3 **Push the TEMP. ▼ / ▲ buttons repeatedly to select 13 for CODE No..**

4 **Push the TIME ▼ / ▲ buttons repeatedly to change the value indicated in the SET DATA section to that you want.**

5 **Push the SET button.**

6 **Push the UNIT LOUVER button (left side of the button) repeatedly to select another indoor UNIT No. to change.**
Repeat steps ***4*** to ***6*** to change the indoor unit addresses so as to make each of them unique.

7 **Push the UNIT LOUVER button (left side of the button) to check the changed addresses.**

8 **If the addresses have been changed correctly, push the TEST button to finish the procedure.**

▼To change all the indoor unit addresses using an arbitrary wired remote controller.
(The method is available when the addresses have already been set automatically.)

(When communication wirings of 2 or more refrigerant lines are interconnected for central control)

NOTE

You can change the addresses of indoor units in each refrigerant line using an arbitrary wired remote controller.

* Enter the address check/change mode and change the addresses.

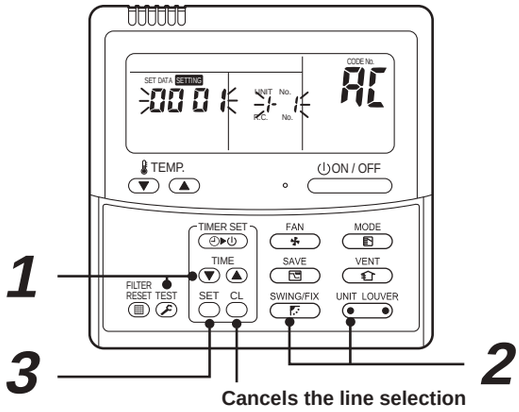

If no number appears on UNIT No., no outdoor unit exists on the line. Push CL button and select another line following step ***2***.

(Execute it while the units are stopped.)

1 **Push and hold the TIME ▼ and TEST buttons at the same time for more than 4 seconds.**
At first, the line 1 and CODE No. AC (Address Change) are indicated on the LCD display.

2 **Push UNIT LOUVER (left side of the button) and SWING/FIX buttons repeatedly to select a system address.**

3 **Push the SET button.**

- The address of one of the indoor units connected to the selected refrigerant line is indicated on the LCD display and the fan and louvers of the unit are activated.
  At first, the current indoor unit address is displayed in SET DATA.
  (No system address is indicated.)

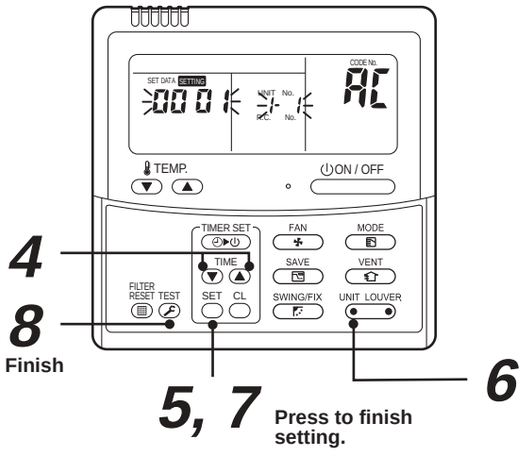

4 **Push the TIME ▼ / ▲ buttons repeatedly to change the value of the indoor unit address in SET DATA.**
Change the value in SET DATA to that of a new address.

5 **Push the SET button to confirm the new address on SET DATA.**

6 **Push the UNIT LOUVER button (left side of the button) repeatedly to select another address to change. Each time you push the button, the indoor unit numbers in a refrigerant line are indicated one after another. Only the fan and louvers of the selected indoor unit are activated.**
Repeat steps ***4*** to ***6*** to change the indoor unit addresses so as to make each of them unique.

7 **Push the SET button.**
(All the segments on the LCD display light up.)

8 **Push the TEST button to finish the procedure.**

■ Resetting the address (Resetting to the factory default (address undecided))

Method 1

Clearing each address separately using a wired remote controller.
Set the system address, indoor unit address and group address to “0099” using a wired remote controller.
(For the setting procedure, refer to the address setting procedures using the wired remote controller on the previous pages.)

Method 2

Clearing all the indoor unit addresses on a refrigerate line at once from the outdoor unit.

1 **Turn off the refrigerant line to reset to the factory default and set the header outdoor unit of the line as below.**

1) Disconnect the relay connectors between the [U1, U2] and [U3, U4] terminals.
   (Leave them as they are if they have already been disconnected.)

2) Turn on DIP switch 2 of SW30 on the interface P.C. board of the header outdoor unit if the switch is OFF. (Leave it as it is if it has already been set to ON.)

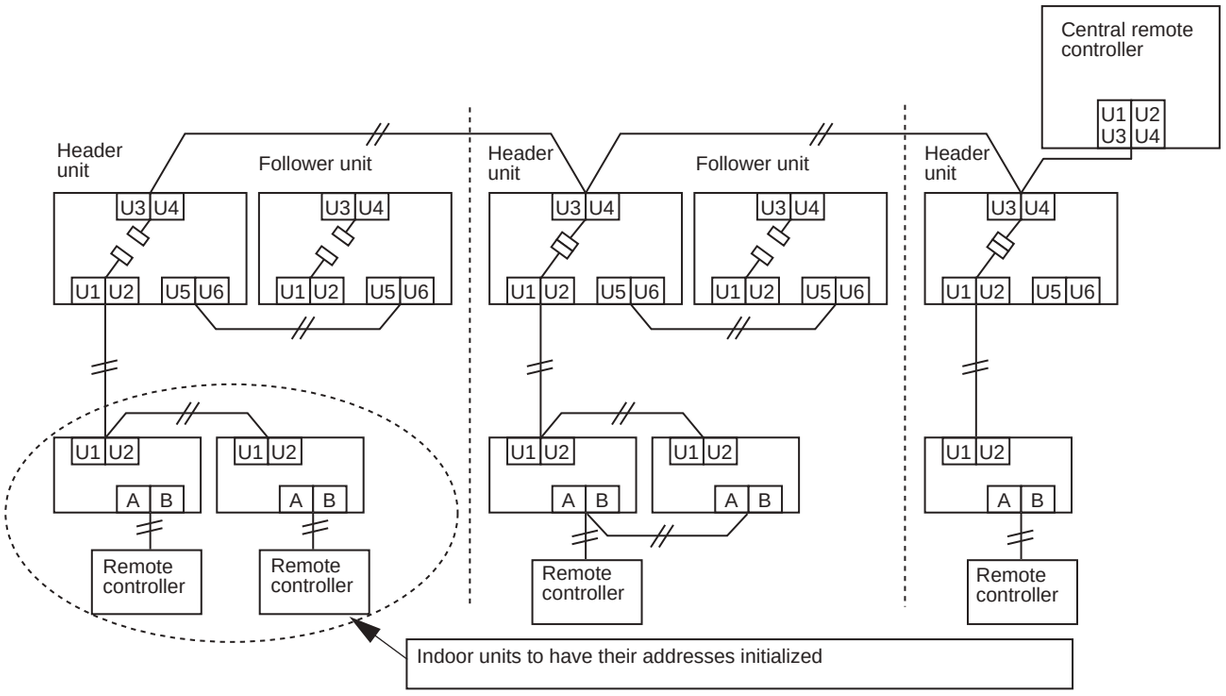

2 Turn on the indoor and outdoor units of the refrigerant line for which you want to initialize the addresses. About one minute after turning on the power, confirm that the 7-segment display on the header outdoor unit indicates "U.1. - - -" and operate the interface P.C. board on the header outdoor unit of the refrigerant line as follows.

SW01	SW02	SW03	SW04	Clearable addresses
2	1	2	Confirm that the 7-segment display indicates "A.d.buS" and turn SW04 ON for more than five seconds.	System/indoor unit/group address
2	2	2	Confirm that the 7-segment display indicates "A.d.nEt" and turn SW04 ON for more than five seconds.	Central control address

3 Confirm that the 7-segment display indicates "A.d. c.L." and set SW01, SW02 and SW03 to 1, 1, 1 respectively.

4 After a time "U.1.L08" appears on the 7-segment display if the address clearing has been completed successfully.
If the 7-segment display indicates "A.d. n.G.", the outdoor unit may still connected with other refrigerant lines. Check the connection of the relay connectors between [U1, U2] and [U3, U4].

NOTE

Take care to carry out the procedure above correctly; otherwise, addresses in other refrigerate lines may also be cleared.

5 Set the addresses again after finishing the clearance.

■ In the case of an increase in address-undefined indoor units (extension, etc.)

To set up the indoor address of a unit with an address that is undefined due to the extension of indoor units or replacement of PC board, etc., follow the methods below.

Method 1

Set up an address individually from a wired remote controller.
(Line address, Indoor address, Group address, Central address)
For the setup method, refer to “Manual address setup from the remote controller.” above.

Method 2

Set up an address from the outdoor unit.

* Leave the addresses of the units for which addresses have already been set up as they are. Set up an address only for the unit where the address is undefined.
  Addresses are allocated from lower numbers.

Setup procedure

Set up the outdoor header units in the refrigerant line to which indoor units have been added, as follows.

1 **Disconnect the relay connector between U1/U2 and U3/U4.**

2 **If it is off, turn on SW30-bit 2 on the interface PC board at outdoor header unit side.**
*Turn off the power, and then execute the operation.

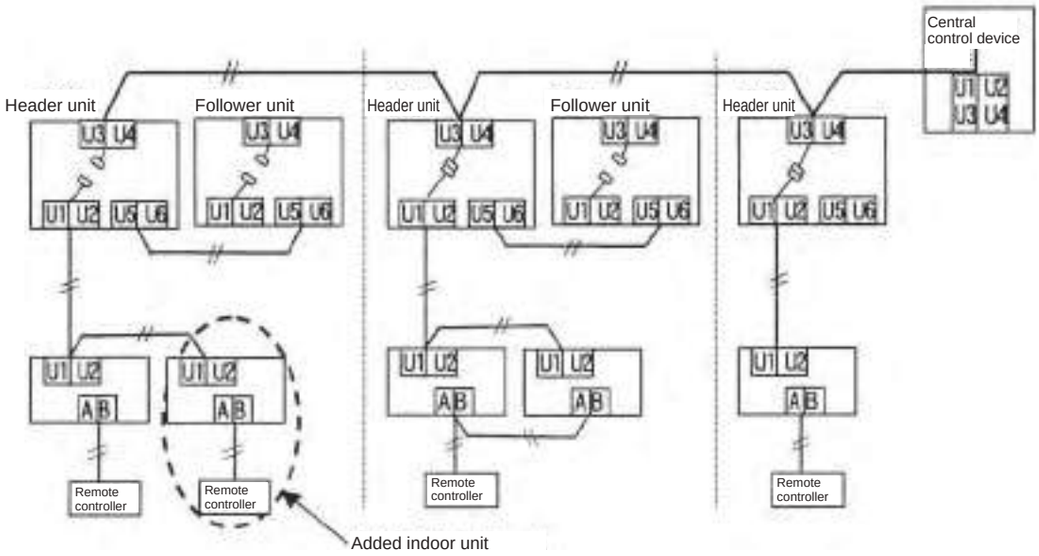

3 **Turn on the indoor/outdoor power for the refrigerant line for which an address is to be set up. After approximately 1 minute, check that “U.1. - - -” is displayed on the 7-segment display.**

4 **Execute the following operation on the interface PC board of the header unit.**

SW01	SW02	SW03	SW04
2	14	2	After checking that “In.At” is displayed on the 7-segment display, push SW04 for 5 seconds or more.

“AUTO1” → “AUTO2” → “AUTO3” → ... → “AUTO9” ... is counted and displayed on the 7-segment display.

5 **When “U.1. - - -” is displayed on the 7-segment display, the setup operation finished.**
Turn off the indoor/outdoor power.

6 **Return to the following setup as before.**

- Relay connector
- SW30-bit 2
- SW01, SW02, SW03

7-4-4. Check after Address Setup when Central Control System Is Connected

When the central control system is connected, check that the following setup has finished after address setup.

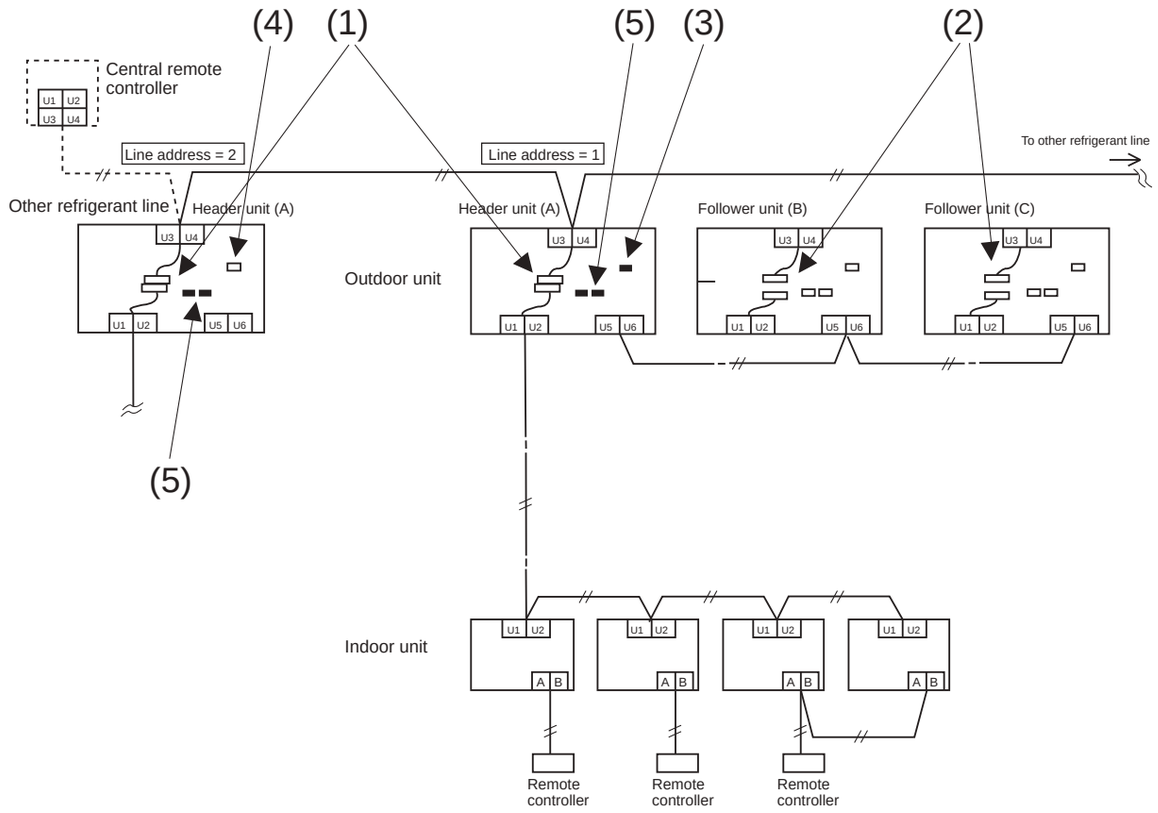

	Main check items	Check
Relay connector	(1) Is the relay connector of the header unit connected after address setup?	
	(2) Is the relay connector of the follower unit disconnect?	
Terminator resistor	(3) Is the terminator resistor (SW30-bit 2) of the header unit with the smallest line address number in the central control turned on? (Setup is unnecessary for follower units.)	
	(4) Is the terminator resistor (SW30-bit 2) of the header units, except for the line with the smallest central control line address, turned off? (Setup is unnecessary for follower units.)	
Line address	(5) Are addresses in the line address (SW13, SW14) not duplicated in each refrigerant line?	

NOTE

The figure above does not show all the electric wires.
For details, refer to the installation manuals for the outdoor unit, indoor unit, remote controller, or optional devices.

7-5. Troubleshooting in Test Operation

If there are phenomena such as the output of a check code or the remote controller is not accepted when powered-on after wiring work or during address setup operation, the following causes are considered.

7-5-1. A Check Code is Displayed on the Remote Controller

Check the code displayed on the indoor remote controller	Header unit 7-segment display	Cause	Countermeasures
E04	–	When outdoor power is off	Check that the header outdoor unit power is on
	L08	Address setup error • Only line addresses of the connected indoor units are undefined. • The outdoor line address and the line addresses of all the indoor units do not match. • The indoor addresses are duplicated. (Units except those displaying E04 are duplicated.) • A header unit is not set up in group control (except groups displaying E04).	Set up the address again.
	E08 ⇔ -XX Alternate blinking	Duplication of indoor addresses (address number in the subcode of the check code are duplicated).	Set up the address again.
	E07	There is no outdoor terminator resistor or there are two or more terminator resistor. (After address setup, when terminator resistor setup is changed after powering-on)	Check SW30 bit 2 of the header unit. No connection between multiple refrigerant lines: SW30 bit 2 is on. Connection between multiple refrigerant lines: SW30 bit 2 of the connected header unit is turned on only for one line.
		Transmission circuit error at the interface side (PC board failure)	Replace the interface PC board.
	E06	After address setup, communication from all the indoor units is interrupted under the condition that a normal operation can be performed.	Check and correct disconnection of the indoor/outdoor communication line (the communication line between the header unit and the leading indoor unit). Check for the influence of communication noise.
E16	E16 ⇔ -XX Alternate blinking	Exceeded the number or capacity of connected indoor units	Adjust the number or capacity of connected indoor units.
E23	E23	Communication between outdoor units has stopped.	Check the number of connected outdoor units. Check that outdoor unit power is on.
E25	E25	Duplication of outdoor addresses (only when an outdoor address was manually set up)	Do not use manual setup for outdoor addresses.
E26	E26 ⇔ -XX Alternate blinking	Number of connected outdoor units has decreased. • When installing an outdoor backup • The power of a follower unit is not turned on.	Correction of the cause of error occurrence • If it occurs when installing a backup, clear the error after setup finishes. • If the power of a follower unit is not turned on, turn on the power.
L04	L04	Duplication of outdoor line addresses • Line address setup error (occurred after connection between U1/U2 and U3/U4 connectors)	Modify the line address setup of the header unit between lines. (Set up SW13 and SW14 on the interface PC board.)
L05(*)	L06	Duplication of indoor units with priority	Set up priority only for one indoor unit.
L06(*)		There are two or more indoor units set up with priority.	Among indoor units indicating “L05,” set one unit with priority.
L08	L08	Address setup error • Only indoor addresses of all the connected indoor units are undefined.	Set up the addresses again. Modify the setup.

* “L05”: Displayed on the indoor unit set up with priority
  “L06”: Displayed on the indoor units except the one set up with priority

7-5-2. Operation from the indoor remote controller is not accepted, and a check code is displayed on the 7-segment display of the interface PC board of the header unit.

Indoor remote controller status	Header unit 7-segment display	Cause	Countermeasures
No response	L08	Line addresses and indoor addresses of all the connected indoor units are not set.	Set up addresses.
		There is no header unit of group control.	Set up a group address.
	E19 ⇔ -00 Alternate blinking	Indoor unit power is not turned on.	Turn on the power again. (In the order: indoor → outdoor)
		Indoor/outdoor communication line is not correctly connected to the U1/U2 terminal of the header unit (Fig. 1). (Indoor/ outdoor cannot communicate before address setup.)	Correct wiring
		There is no of outdoor terminator resistor, or there are two or more resistances (before address setup).	Check SW30 bit 2 of the header unit. No connection between multiple refrigerant lines: SW30 bit 2 is on. Connection between multiple refrigerant lines: SW30 bit 2 of the connected header unit is turned on only for one line.
	E19 ⇔ -02 Alternate blinking	When connecting an indoor/outdoor communication line between outdoor units under the condition of a connected communication line between outdoor units (Fig. 2).	Correct wiring
		SW08 setup error	Turn all SW08 switches to “off.”
	E20 ⇔ -01 Alternate blinking	Address setup is performed with connecting an indoor/ outdoor communication line between outdoor units (Fig. 3).	Correct wiring
		Address setup is performed under the condition of connecting multiple refrigerant lines (Fig. 3).	Correct wiring

7-5-3. There is no display of a check code on the 7-segment display on the interface PC board of the header unit, although there is indoor unit that is not accepting operation from the indoor remote controller.

Indoor remote controller status	Header unit 7-segment display	Cause	Countermeasures
No response	None	The communication line is not connected between indoor and outdoor (the unit that does not respond to the indoor remote controller).	Improve the wiring.
		Line address and indoor address are not set (the unit that does not respond to the indoor remote controller).	Set up the address.
		The power of the header unit of the group is not turned on in indoor group control (the unit that does not respond to the indoor remote controller).	Turn on the power.
		Group address is set to the follower unit for individual control (the unit that does not respond to the indoor remote controller).	Set the group address to “0” in the case of individual control.
No display on the indoor remote controller (no line is output.)	None	The power is not turned on (the unit that is not displayed on the indoor remote controller).	Turn on the power.
		The indoor remote controller is not connected with a wire (the unit that is not displayed on the indoor remote controller).	Improve the wiring.
		Miswiring of the indoor remote controller (the unit that is not displayed on the indoor remote controller)	Improve the wiring.
		Indoor remote controller communication circuit error (the unit that is not displayed on the indoor remote controller) If 220-240 V is incorrectly applied to the indoor remote controller terminal, the remote controller communication circuit fails.	Remove the quick connect terminal connected to indoor remote controller terminals A/B, and check the voltage. If voltage is not applied (normally 15 to 18 V), replace the PC board.

7-5-4. In checking the number of connected outdoor units and connected indoor units after address setup, a lower number of connected units is displayed. (There are outdoor/indoor units that do not operate in a test operation.)

Status	Cause	Countermeasures
The number of connected outdoor units is too few.	Miswiring of communication lines between outdoor units or an unconnected wire (Fig. 4). (Address setup operation finished without recognizing a miswired follower unit.)	After improvement of wiring, set up the addresses again and check the number of connected outdoor units.
The number of connected indoor units is too few.	Miswiring of communication lines between indoor units or an unconnected wire (Fig. 5). (Address setup operation finished without recognizing a miswired indoor unit.)	After modification of wiring, set up the addresses again and check the number of connected indoor units.
The number of indoor units connected to a group is too few in group operation from an indoor remote controller.	The indoor remote controller is not connected with wire. Miswiring of the indoor remote controller	Using the main indoor remote controller connected to a group, start a test operation, specify the unit that is not operating (the unit not connected to the group), and then check the wiring.
	Indoor remote controller communication circuit error If 220-240 V is incorrectly applied to the remote controller terminal, the remote controller communication circuit fails.	Using the main indoor remote controller connected to a group, start a test operation and then specify the unit that is not operating (the unit not connected to the group). Remove the quick connect terminal connected to remote controller terminals A/B, and check the voltage. If voltage is not applied (normally 15 to18 V), replace the PC board.

Miswiring example

Figure	Remote controller status	Header unit 7-segment display	Miswiring example
Fig. 1	No response	E19-00	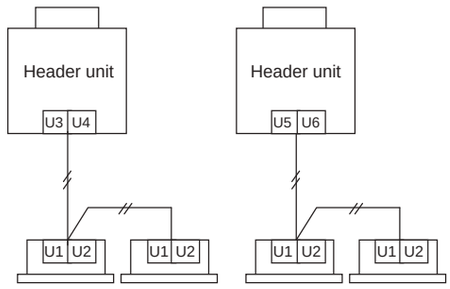
Fig. 2	No response	E19-02	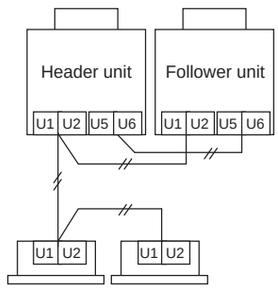
Fig. 3	No response	E20-01	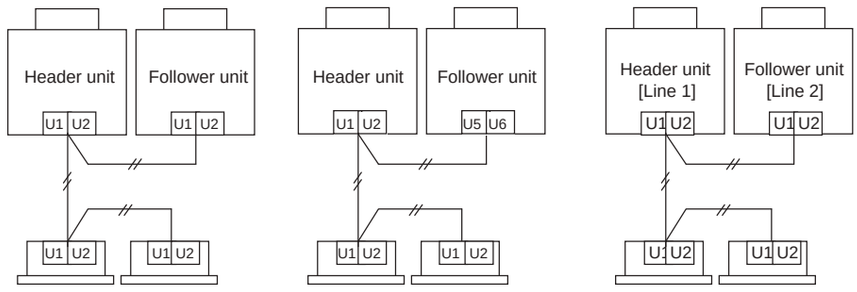

Figure	Status	Miswiring example
Fig. 4	The number of connected outdoor units is too few.	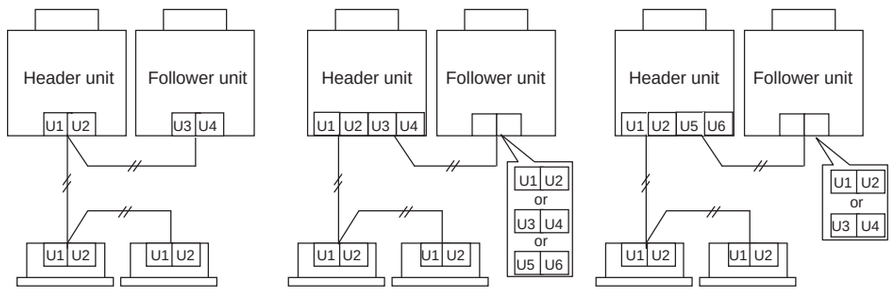
Fig. 5	The number of connected indoor units is too few.	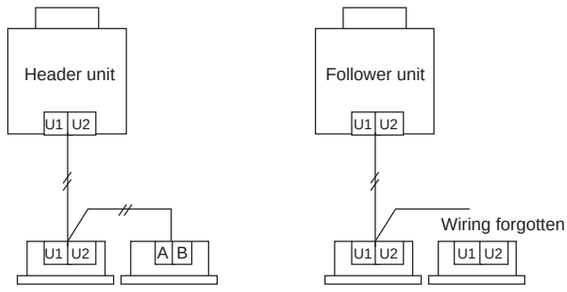

7-6. Test Operation Check

7-6-1. Fan Check

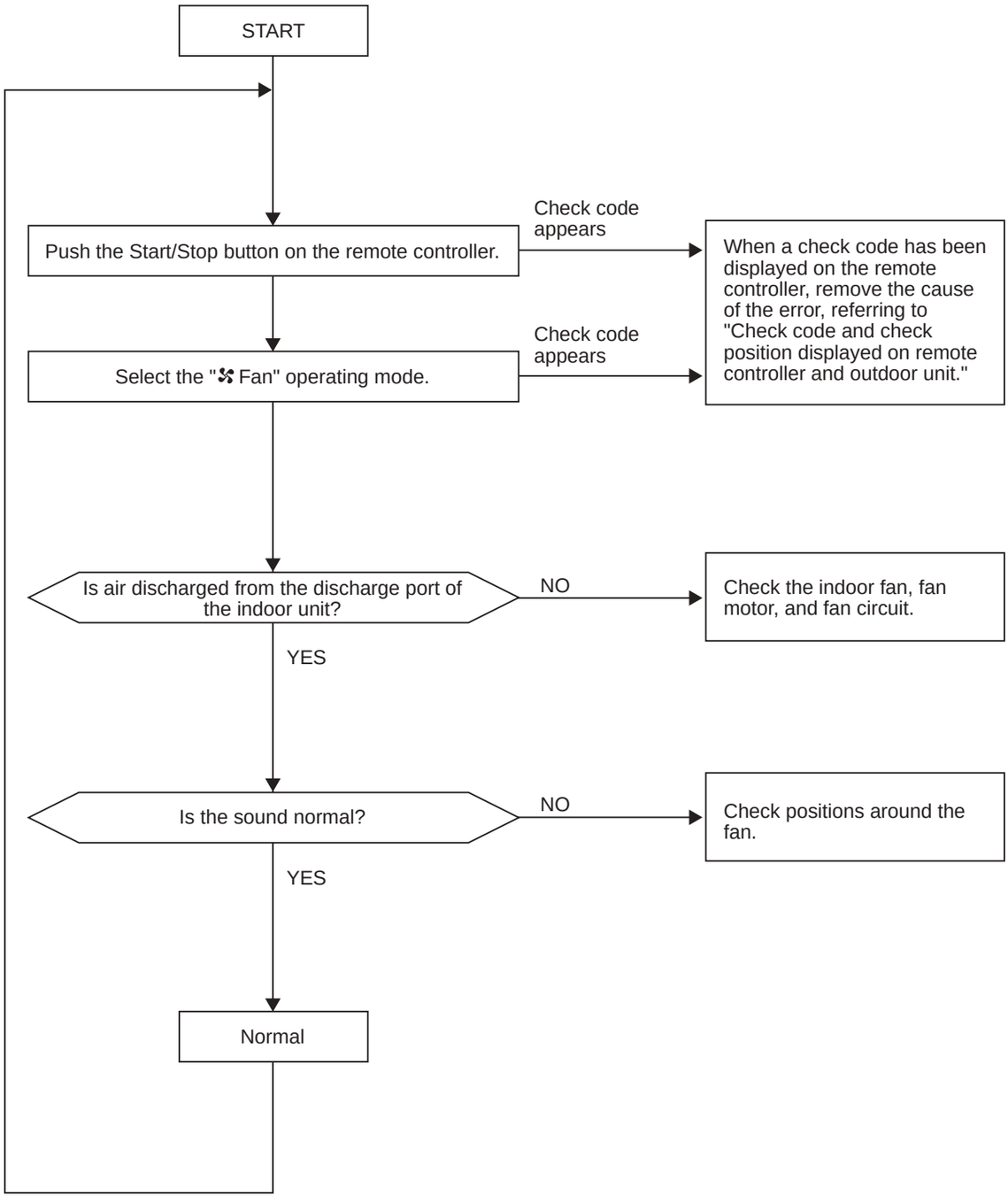

Check every indoor unit in turn.

7-6-2. Cooling/heating Test Operation Check

The cooling/heating test operation check can be performed on both the indoor remote controller and the outdoor header unit interface PC board.

(1) Test operation start/stop operation

Test operation from the indoor remote controller

- Wired remote controller: Refer to the items below in “Test operation” of the wired remote controller.
- Wireless remote controller: Refer to the items below in “Test operation” of the wireless remote controller.
- Lite-Vision plus remote controller : Refer to the installation manual of RBC-AMS51E

▼ Wired remote controller

Procedure	Operation content
1	When the Test button is pushed for 4 seconds or more, “TEST” is displayed in the display section, and the unit enters test operating mode. 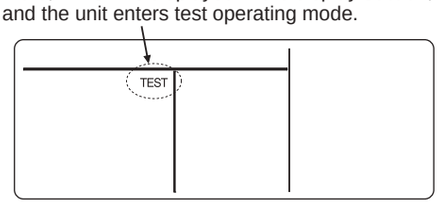
2	Push the ON / OFF button.
3	Using the Select Mode button, select the “❄ COOL” or “☀ HEAT” operating mode. • Do not use an operating mode other than “❄ COOL” or “☀ HEAT”. • Temperature adjustment is unavailable during test operation. • Error is detected as usual. 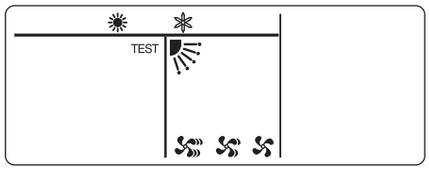
4	When the test operation has finished, push the ON / OFF button to stop the operation. (The same display as in procedure 1 appears in the display section.)
5	Push the Test button to clear the test operating mode. (“TEST” disappears from the display section, and the status returns to the normal stopped status.) 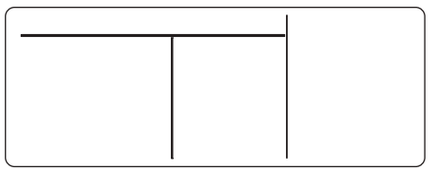

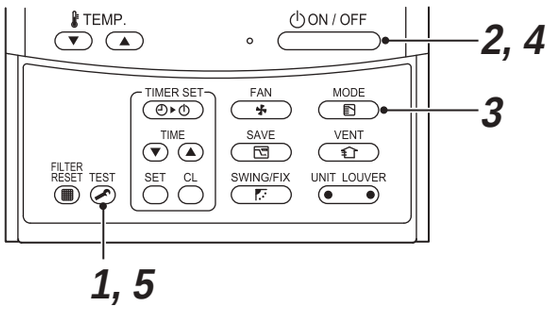

▼ Wireless remote controller (Except the 4-way Cassette type and the Ceiling type)

Test run (Forced cooling operation)

Requirement:

- Finish the forced cooling operation in a short time because it applies excessive strength to the air conditioner.

How to perform forced cooling operation

1. When TEMPORARY button is pushed for 10 seconds or more, “Pi!” sound is heard and the operation changes to a forced cooling operation. After approx. 3 minutes, a cooling operation starts forcedly.
   Check cool air starts blowing. If the operation does not start, check wiring again.
2. To stop a test operation, push TEMPORARY button once again (Approx. 1 second).
   - Check wiring / piping of the indoor and outdoor units after forced cooling operation.

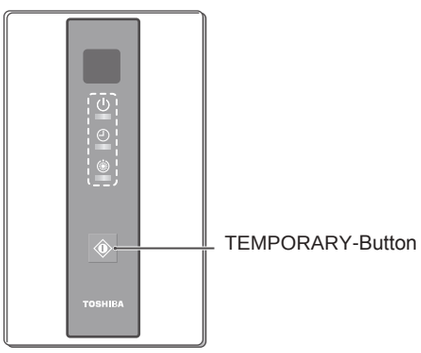

▼ **Wireless remote controller (4-way Cassette type)**

Test run (Forced cooling operation)

Requirement:

- Finish the forced cooling operation in a short time because it applies excessive strength to the air conditioner.

How to perform forced cooling operation

1. When TEMPORARY button is pushed for 10 seconds or more, “Pi!” sound is heard and the operation changes to a forced cooling operation. After approx. 3 minutes, a cooling operation starts forcedly.
   Check cool air starts blowing. If the operation does not start, check wiring again.
2. To stop a test operation, push TEMPORARY button once again (Approx. 1 second).
   - Check wiring / piping of the indoor and outdoor units in forced cooling operation.

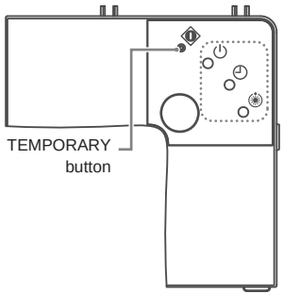

▼ **Wireless remote controller (Ceiling type)**

Test run (Forced cooling operation)

Requirement:

- Finish the forced cooling operation in a short time because it applies excessive strength to the air conditioner.

How to perform forced cooling operation

1. When TEMPORARY button is pushed for 10 seconds or more, “Pi!” sound is heard and the operation changes to a forced cooling operation. After approx. 3 minutes, a cooling operation starts forcedly.
   Check cool air starts blowing. If the operation does not start, check wiring again.
2. To stop a test operation, push TEMPORARY button once again (Approx. 1 second).
   - Check wiring / piping of the indoor and outdoor units in forced cooling operation.

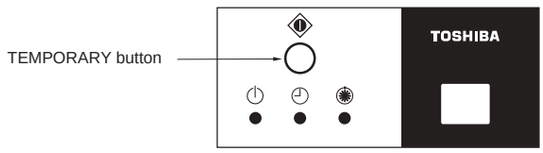

Test operation from the outdoor unit

- Refer to “7-7-2. Function to Start/Stop (ON/OFF) Indoor Unit from Outdoor Unit” in “7-7. Service Support Function.”

Note: The test operation returns to normal operating mode after 60 minutes.

(2) Test operation

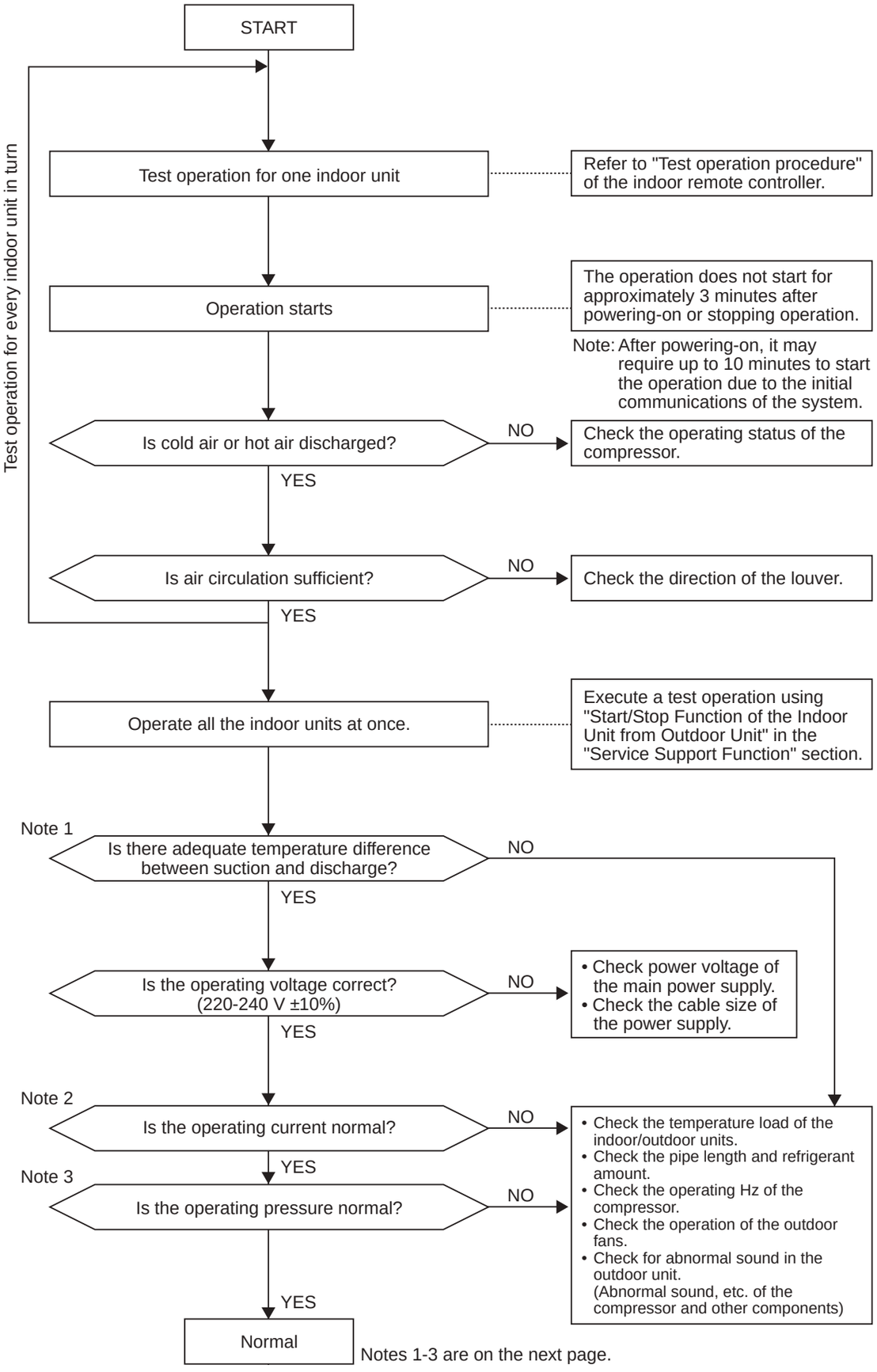

Notes 1-3 are on the next page.

7-7. Service Support Function

7-7-1. Check Function for Connecting of Refrigerant and Control Lines

This function is provided to check misconnection of the refrigerant pipes and the control transmission line (Wiring over lines) between indoor unit and outdoor unit by using the switch on the interface P.C. board of the header unit. However, be sure to check the following items prior to executing this check function.

1 **This check function does not work when a group operation by remote controller is performed and it is used over outdoor units.**

2 **When using this check system, be sure to check for each 1 line in the unit of outdoor unit. If checking the multiple lines at the same time, misjudgment may be caused.**

(Check procedure)

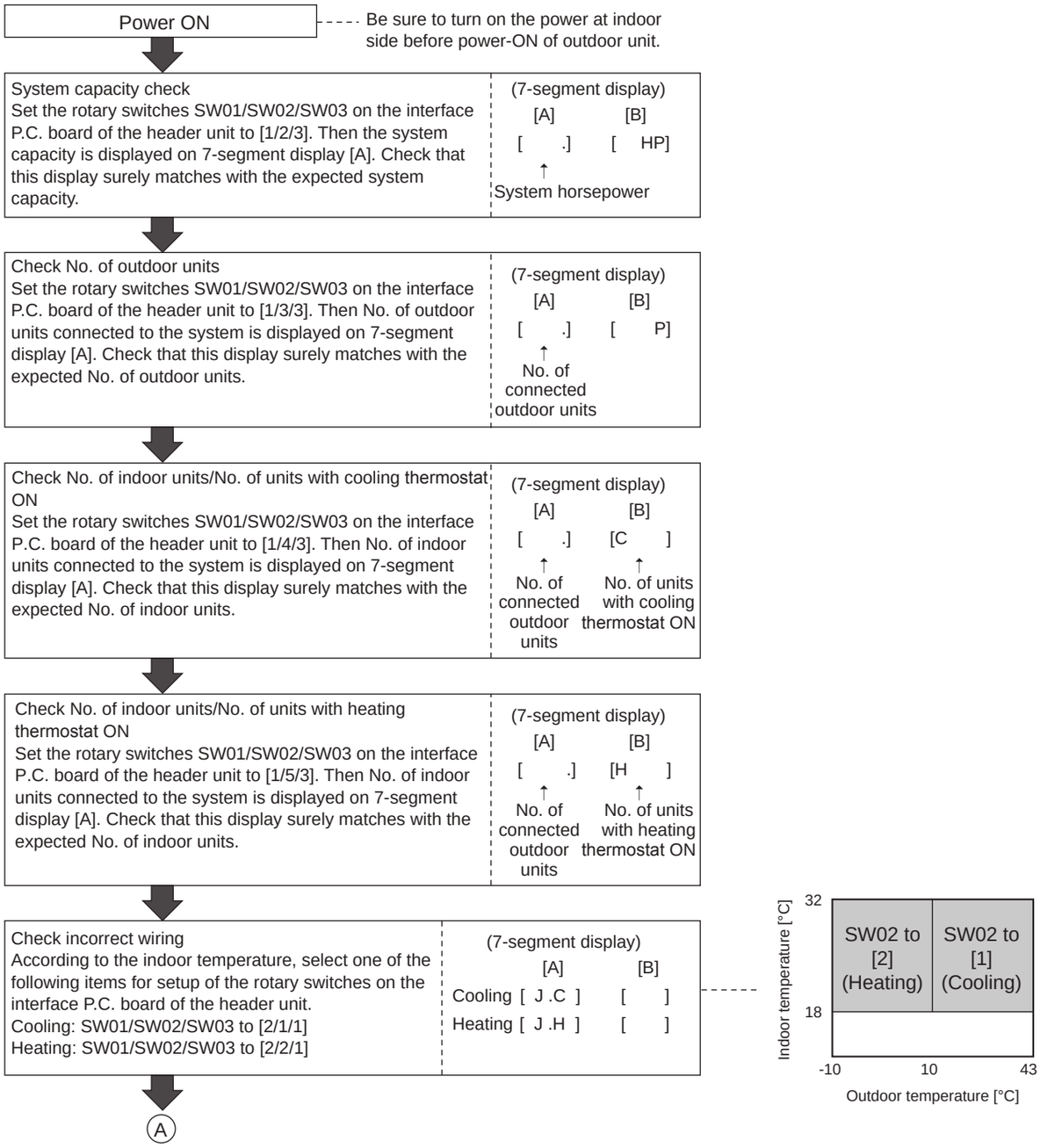

Note 1: Criteria for the difference between suction and discharge temperatures

(1) Cooling operation

After operating for a minimum of 30 minutes in “COOL” mode, if the ΔT dry bulb temperature difference between suction and discharge air of the indoor unit is 8°C or more, it is normal.

(2) Heating operation

After operating for a minimum of 30 minutes in “HEAT” mode, if the ΔT dry bulb temperature difference between suction and discharge air of the indoor unit is 15°C or more, it is normal.

* If demand from the indoor unit on the outdoor unit is low because the difference between the temperature set by the remote controller and the temperature of the room is small, then the ΔT temperature difference is small.
* Consider that ΔT temperature difference may diminish in cases of a system in which the connected indoor unit capacity exceeds the outdoor unit capacity, the pipe length is long, or a large difference exists among outdoor units.

Note 2: Criteria for operating power current

The table below shows the maximum current for each outdoor unit. Under standard conditions, operating current is about 80% of the value shown in the table below.

Outdoor unit	MMY-MAP	0806*	1006*	1206*	14B6*	1406*	1606*	18B6*	1806*	2006*	2206*
Current value	(A)	20.5	21.5	26.1	29.4	31.0	35.8	39.9	40.6	44.9	49.3

Note 3: Criteria for cycle status

(1) These data are based on operating a 4-way Air Discharge Cassette type air conditioner of 100% connection with standard piping length.

Data may vary depending on temperature conditions, installed pipe length, and room shape combinations, or indoor unit connection capacity.

For pressure criteria in different temperature conditions, refer to (2).

Outdoor unit MMY-MAP	Operating mode	Pressure (MPa)		Pipe surface temperature (℃)					Number of compessor rotations (rps)		Indoor fan	Air temperature condition (DB/WB) (℃)	
		Pd	Ps	Discharge (TD)	Suction (TS)	Indoor heat exchanger (TC)	Outdoor heat exchanger (TE)	Liquid temperature (TL3)	Compressor 1	Compressor 2		Indoor	Outdoor
0806*	Cooling	2.9	0.9	80	16	10	40	30	50	50	High	27/19	35/-
	Heating	2.6	0.7	75	5	35	3	30	50	50	High	20/-	7/6
1006*	Cooling	3.1	0.9	85	16	11	40	30	60	60	High	27/19	35/-
	Heating	2.6	0.7	80	4	35	2	30	65	65	High	20/-	7/6
1206*	Cooling	3.2	0.9	90	16	11	40	30	70	70	High	27/19	35/-
	Heating	2.6	0.7	85	3	35	2	25	75	75	High	20/-	7/6
14B6*	Cooling	3.2	0.9	95	16	11	40	30	85	85	High	27/19	35/-
1406*	Cooling	3.2	0.9	90	16	10	40	35	60	60	High	27/19	35/-
	Heating	2.6	0.7	80	4	35	3	30	65	65	High	20/-	7/6
1606*	Cooling	3.2	0.9	90	16	10	40	35	70	70	High	27/19	35/-
	Heating	2.8	0.7	85	3	30	2	25	70	70	High	20/-	7/6
18B6*	Cooling	3.1	0.9	90	16	10	40	35	80	80	High	27/19	35/-
1806*	Cooling	3.1	0.9	80	15	11	40	35	70	70	High	27/19	35/-
	Heating	2.8	0.7	70	4	30	3	25	75	75	High	20/-	7/6
2006*	Cooling	3.1	0.9	85	15	11	40	35	80	80	High	27/19	35/-
	Heating	2.8	0.6	75	3	30	2	25	85	85	High	20/-	7/6
2206*	Cooling	3.2	0.9	95	14	11	40	35	100	100	High	27/19	35/-
	Heating	2.7	0.6	75	3	30	2	20	85	85	High	20/-	7/6

* This compressor is driven with a 4-pole motor. The value of the compressor frequency (rps) measured with a clamp meter at the compressor lead line is two times the rotation count (rps) of the compressor.
* Each compressor may have a different frequency as a measure against resonance.
* The temperature of the indoor heat exchanger (TC) indicates TCJ sensor temperature when cooling, and TC2 sensor temperature when heating, respectively.

(2) Criteria for operating pressure

Operating mode		Cooling	Heating
Indoor temperature (°C)		18~32	15~25
Outdoor temperature (°C)		25~35	5~10
Pressure	High pressure (MPa)	2.0~3.7	2.5~3.3
	Low pressure (MPa)	0.5~0.9	0.5~0.7

* Criteria after 15 minutes or more has passed since operating started

(3) On rotations of outdoor fans

Outdoor fans may rotate slowly to control pressure when cooling with low outer air temperature or heating with excessive load. For control content, also refer to items in Section 5, “Control Outline: Outdoor Unit, Outdoor Fan Control.”

Ⓐ

Operation start Press the push-switch SW04 on the interface P.C. board of the header unit for 2 seconds or more. The operation starts. Check that 7-segment display [B] shows [CC] for cooling and [HH] for heating.	(7-segment display) [A] [B] Cooling [C] [CC] Heating [H] [HH]

Operation

Confirmation of check results (1) Check that No. of misconnected indoor units is displayed on 7-segment display [B] after 15 minutes. (If there is no misconnection, [00P] is displayed.)	(7-segment display) [A] [B] [ ] [# # P] ↑ ↑ C or H No. of misconnected indoor units

This check operation requires 15 minutes even if there is no misconnection or there is any misconnection.

Confirmation of check results (2) Press the push-switch SW05 on the interface P.C. board of the header unit for 2 seconds or more. The indoor address in which error is being detected is displayed on 7-segment display [B]. If there are multiple indoor address in which error is being detected, they are successively exchanged and displayed. (When SW05 is turned on again, the display returns to display of No. of units.)	(7-segment display) [A] [B] [ ] [# #] ↑ ↑ C or H Address display of misconnected indoor unit

After check, return the rotary switches SW01/SW02/SW03 on the interface P.C. board of the header unit to [1/1/1].	(7-segment display) [A] [B] [U1] [ ]

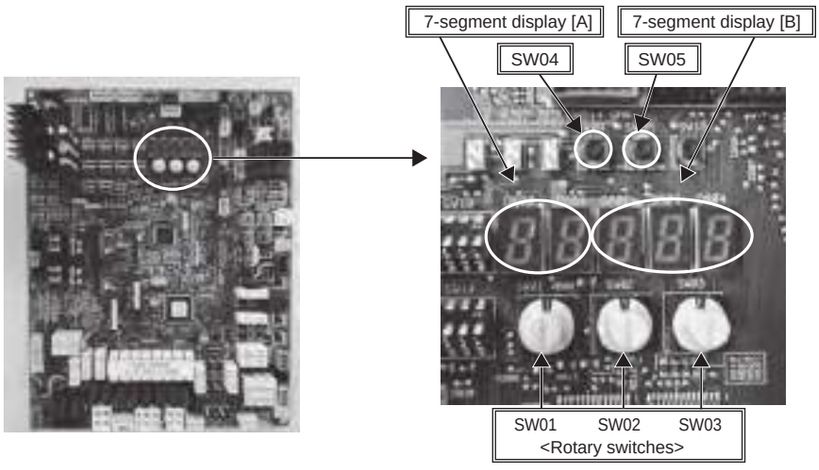

7-7-2. Function to Start/Stop (ON/OFF) Indoor Unit from Outdoor Unit

The following functions of the indoor unit can start or stop by the switches on the interface P.C. board of the header unit.

No	Function	Outline	Setup/Release	7-segment display
1	Cooling test operation	Changes the mode of all the connected indoor units collectively to cooling test operation. Note) Control operation same as usual test operation from remote control is performed.	[Setup] Set SW01/SW02/SW03 to [2/5/1], and press SW04 for 2 seconds or more. [Release] Return SW01/SW02/SW03 to [1/1/1].	Section A [C.] Section B [– C]
2	Heating test operation	Changes the mode of all the connected indoor units collectively to heating test operation. Note) Control operation same as usual test operation from remote control is performed.	[Setup] Set SW01/SW02/SW03 to [2/6/1], and press SW04 for 2 seconds or more. [Release] Return SW01/SW02/SW03 to [1/1/1].	Section A [H.] Section B [– H]
3	Fan test operation	Changes operation mode of all the connected indoor units collectively to test operation mode. Note) Control operation same as usual test operation from remote control is performed.	[Setup] Set SW01/SW02/SW03 to [2/9/1], and push SW04 for 2 seconds or more. [Release] Return SW01/SW02/SW03 to [1/1/1].	Section A [F.] Section B [– F]
4	Batch start	Starts all the connected indoor units collectively. Note) The contents follow to the setup of remote controller.	[Setup] Set SW01/SW02/SW03 to [2/7/1], and press SW04 for 2 seconds or more. [Release] Return SW01/SW02/SW03 to [1].	Section A [C.H] Section B [11] [00] is displayed on Section B for 5 seconds.
	Batch stop	Stops all the connected indoor units collectively.	[Setup] Set SW01/SW02/SW03 to [2/7/1], and press SW05 for 2 seconds or more. [Release] Return SW01/SW02/SW03 to [1].	Section A [C.H] Section B [00] [00] is displayed on Section B for 5 seconds.
5	Individual start	Starts the specified indoor unit. Notes) • The contents follow to the setup of remote controller. • The other indoor units keep the status as they are.	[Setup] Set SW01 to [16], set SW02 and SW03 to address No. (1 to 64) to be started, and press SW04 for 2 seconds or more. [Release] Return SW01/SW02/SW03 to [1/1/1].	Section A [ ] Section B [ ] Section A: Displays the corresponding indoor address. Section B: Displays [11] for 5 seconds from operation-ON.
	Individual stop	Stops the specified indoor unit. Note) The other indoor units keep the status as they are.	[Setup] Set SW01 to [16], set SW02 and SW03 to address No. (1 to 64) to be stopped, and press SW05 for 2 seconds or more. [Release] Return SW01/SW02/SW03 to [1/1/1].	Section A [ ] Section B [ ] Section A: Displays the corresponding indoor address. Section B: Displays [00] for 5 seconds from operation-OFF.
	Individual test operation	Operates the specified indoor unit. Note) The other indoor units keep the status as they are.	[Setup] Set SW01 to [16], set SW02 and SW03 to address No. to be operated, and press SW04 for 10 seconds or more. [Release] Return SW01/SW02/SW03 to [1/1/1].	Section A [ ] Section B [ ] Section A: Displays the corresponding indoor address. Section B: Displays [FF] for 5 seconds from test operation-ON.

NOTE 1) This start/stop function only sends the signals from the outdoor unit to the indoor unit, such as start, stop, operation mode, etc. It does not resend the signals even if the indoor unit does not follow the sent signals.

NOTE 2) The above controls are not used during abnormal stop.

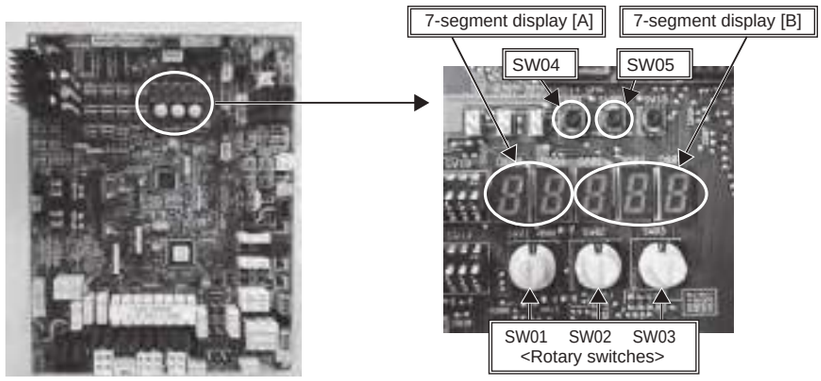

(1) Cooling test operation function

This function is provided to change collectively the mode of all the indoor units connected to the same system for the cooling test operation mode, by using switches on the interface board of the header unit.

<Operation procedure>

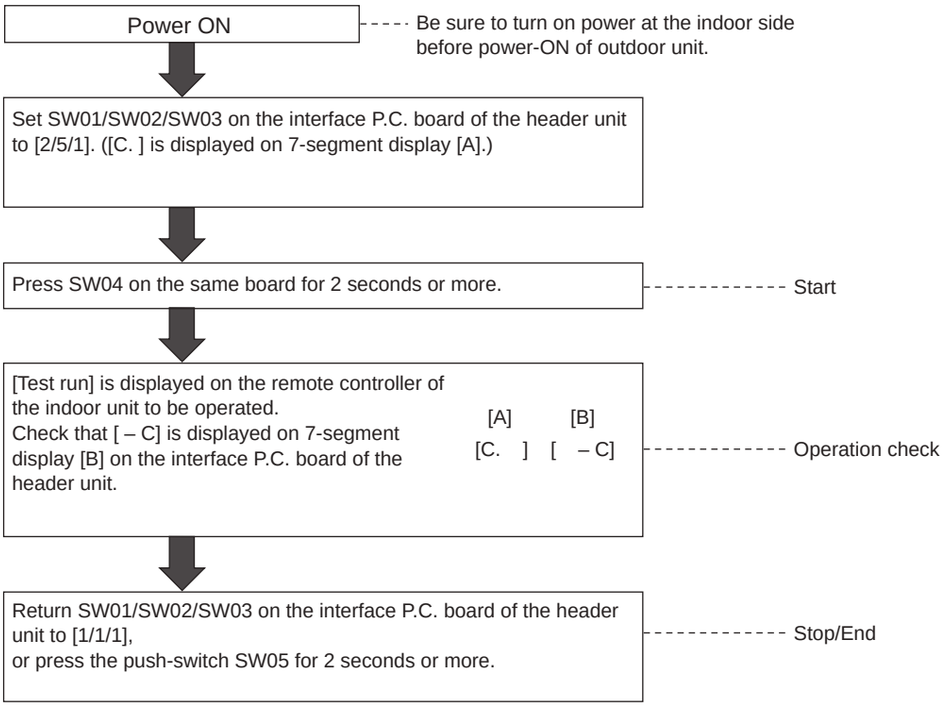

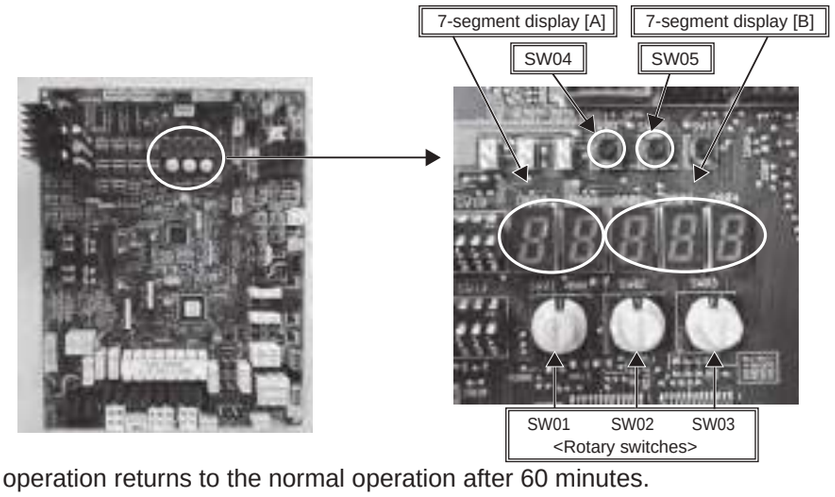

NOTE) The test operation returns to the normal operation after 60 minutes.

(2) Heating test operation function

This function is provided to change collectively the mode of all the indoor units connected to the same system for the heating test operation mode, by using switches on the interface board of the header unit.

<Operation procedure>

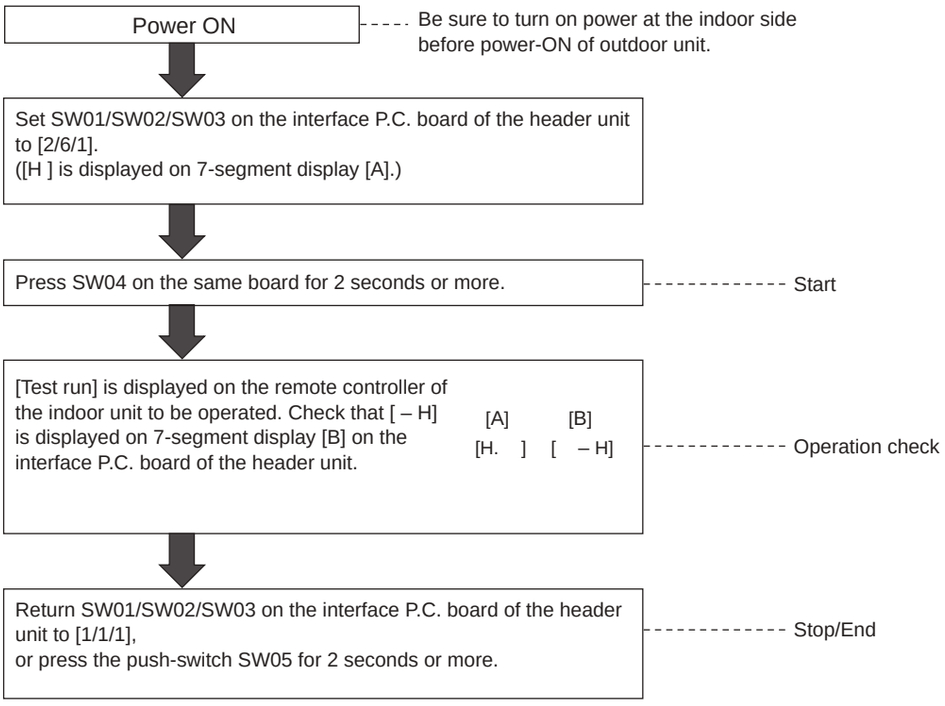

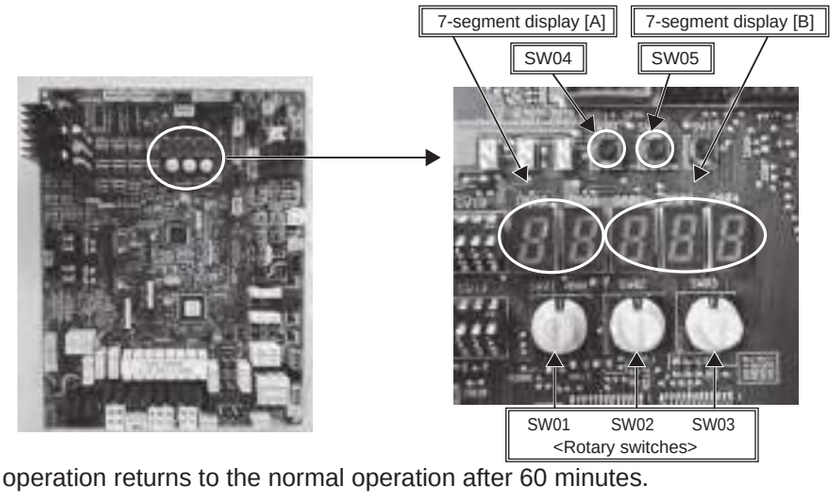

NOTE) The test operation returns to the normal operation after 60 minutes.

(3) Fan test operation function

This function is provided to change collectively the mode of all the indoor units connected to the same system for the fan test operation mode by using switches on the interface P.C. board of the header unit.

<Operation procedure>

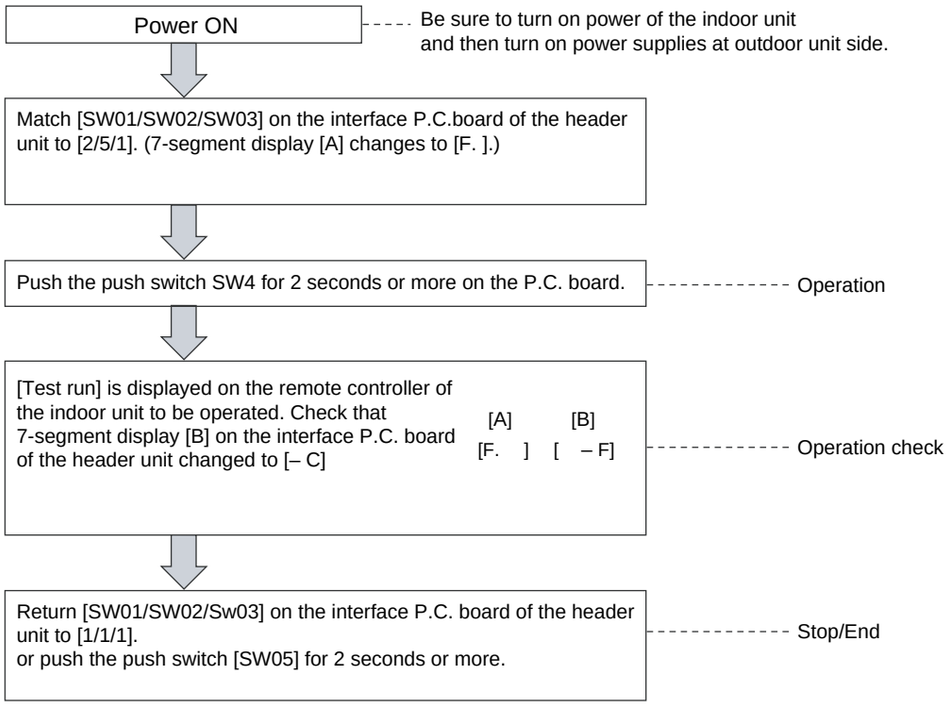

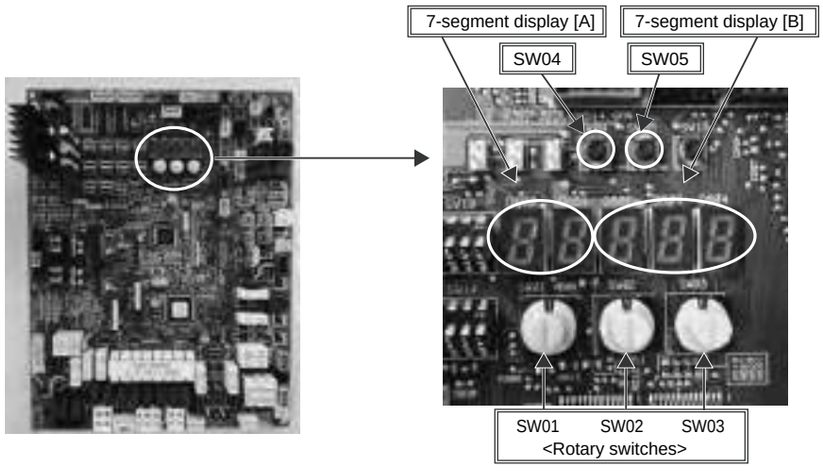

NOTE) The test operation ends after 60 minutes and the operation returns to normal status.

(4) Batch start/stop (ON/OFF) function

This function is provided to start/stop collectively all the indoor units connected to the same system by using switches on the interface board of the header unit.

<Operation procedure>

Power ON

Be sure to turn on power at the indoor side before power-ON of outdoor unit.

If a check code is already displayed with SW01/SW02/SW03 being [1/1/1], return the status to normal one according to troubleshooting and then execute a test operation.

Set up the operation mode of the remote controller.
(If it is not set up, the operation continues with the current mode.)
(FAN/COOL/HEAT)

The unit which is not given with priority by heating priority control, cooling priority control, and selection of cooling or heating mode is not operated.
In this case, "⏻ operation ready" or "operation mode controlled" is displayed on the remote controller.

Set SW01/SW02/SW03 on the interface P.C. board of the header unit to [2/7/1].
([C.H] is displayed on 7-segment display [A].)

Press SW04 on the same board for 2 seconds or more. — Start

The indoor unit to be started operates. — Operation check

(If the discharge temperature does not change though COOL or HEAT has been set up from the remote controller, misconnection is considered.)

Press the push-switch SW05 on the interface P.C. board of the header unit for 2 seconds or more. — Stop

After test operation, return the rotary switches SW01/SW02/SW03 on the interface P.C. board of the header unit to [1/1/1]. — End

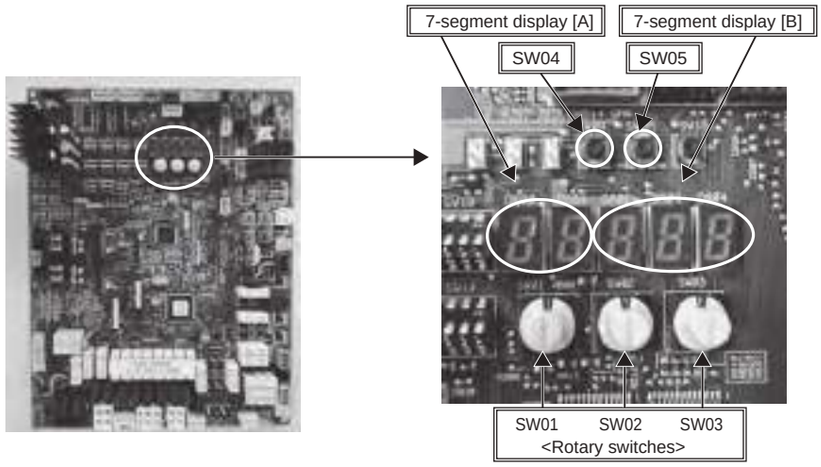

(5) Individual start/stop (ON/OFF) individual test operation function

This function is provided to start/stop (ON/OFF) individually each indoor unit connected to the same system by using switches on the interface board of the header unit.

Set SW01 [16] and set SW02, SW03 to indoor address No. (1 to 64) to be started (Refer to the following table*) - only the setup indoor unit starts operation.

(In the rotary switches of the indoor unit which operates in a group by the remote controller, the follower unit cannot be individually started or stopped. In this case, [- -] is displayed on 7-segment display [B] on the interface P.C. board of the header unit.)

<Operation procedure>

Power ON

Be sure to turn on power at the indoor side before power-ON of outdoor unit.

If a check code is already displayed with SW01/SW02/SW03 being [1/1/1], return the status to normal one according to troubleshooting and then execute a test operation.

Set up the operation mode of the remote controller. (If it is not set up, the operation continues with the current mode.)

The unit which is not given with priority by heating priority control, cooling priority control, and selection of cooling or heating mode is not operated. In this case, "⏻ operation ready" or "operation mode controlled" is displayed on the remote controller.

Match the rotary switches on the interface P.C. board of the header unit to the following table*.

(7-segment display)

[A] [ ] ↑ Address display of corresponding indoor unit

[B] [ ] ↑ [00] is displayed for 5 seconds after operation-ON.

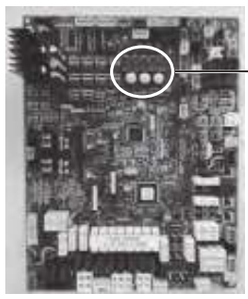

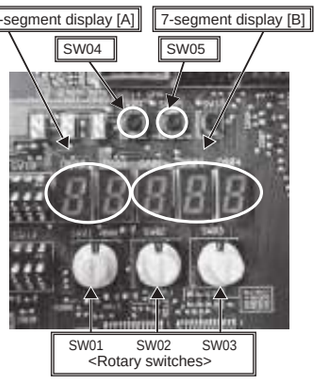

Press the push-switch SW04 on the same board for 2 seconds or more.
(If pressed continuously for 10 seconds or more, the operation changes to the individual test operation.)

(7-segment display)

[A] [ ] ↑ Address display of corresponding indoor unit

[B] [ ] ↑ [11] is displayed for 5 seconds after operation-ON. (For individual test operation, [FF] is displayed.)

Start

The indoor unit to be started operates.

Operation check

(If the discharge temperature does not change though COOL or HEAT has been set up from the remote controller, misconnection is considered.)

Press the push-switch SW05 on the interface P.C. board of the header unit for 2 seconds or more.

(7-segment display)

[A] [ ] ↑ Address display of corresponding indoor unit

[B] [ ] ↑ [00] is displayed for 5 seconds after operation-ON.

After test operation, return the display select switches SW01/SW02/SW03 on the interface P.C. board of the header unit to [1/1/1].

End

*

SW01	SW02	SW03	Units to be operated
16	1~16	1	Address 1 to Address 16 } individually
16	1~16	2	Address 17 to Address 32 } individually
16	1~16	3	Address 33 to Address 48 } individually
16	1~16	4	Address 49 to Address 64 } individually

In individual start/stop

NOTE) The individual test operation returns to the normal operation after 60 minutes.

7-7-3. Check code Clearing Function

(1) Clearing from the main remote controller

▼ Check code clearing in outdoor unit

Check code of the outdoor unit currently detected is cleared by the unit of one refrigerant circuit system to which the indoor units operated by the remote controller is connected. (Check code of the indoor unit is not cleared.)
For clearing check codes, the service monitor function of the remote controller is used.

<Method>

1. **Change the mode to service monitor mode by pushing CL + TEST buttons simultaneously for 4 seconds or more.**
2. **Using TEMP. buttons, set CODE No. to "FF".**
3. **The display in Section A in the following figure is counted with interval of 5 seconds as "0005" --> "0004" --> "0003" --> "0002" --> "0001" --> "0000".**
   When the count arrives "0000", the check code is cleared.
   *However, counting from "0005" is repeated on the display.
4. **When TEST button is pushed, the status returns to the normal status.**

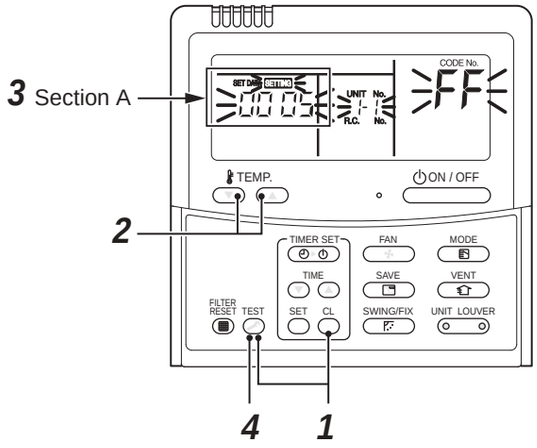

▼ Check code clearing in indoor unit

Check code in the indoor unit is cleared by ON / OFF button on the remote controller.
(Only check code of the indoor unit connected with operating remote controller is cleared.)

(2)Clearing check code by using switches on the interface board of the header unit

Using the switches on the interface P.C. board of the header unit, this function is to clear the currently detected check code for each refrigerant circuit system without resetting the power supply.
Check codes in both outdoor and indoor units are once cleared, and check code detection is performed again.

Set the rotary switches on the interface P.C. board of the header unit as follows. Set SW01/SW02/SW03 to [2/16/1]	7-segment display [A] [B] [E r] [ ]

↓

Press the push-switch SW04 on the same board for 5 seconds or more.

↓

[C L] is displayed in 7-segment display [B] on the board (for 5 seconds), and Check code is completely cleared.	7-segment display [A] [B] [E r] [C L]

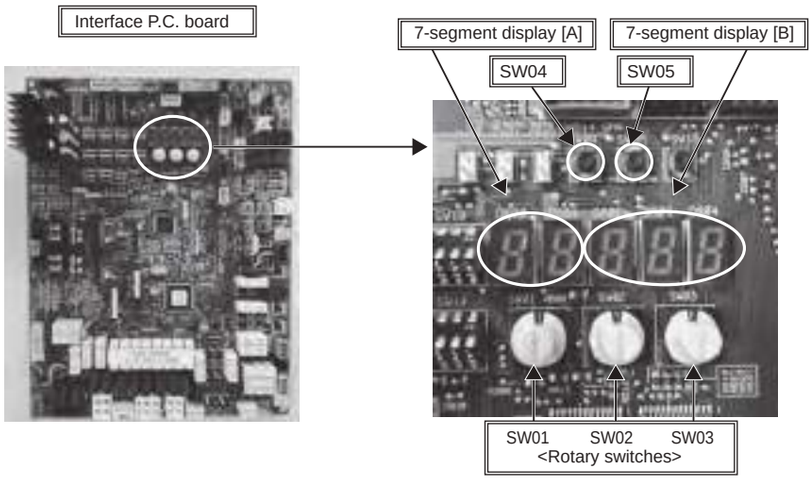

(3)Clearing check code by resetting power

This function is provided to clear check code in a system by resetting the power of all the outdoor and the indoor units. As same as the clearing method by the interface P.C. board, check codes of both the outdoor and the indoor units are once cleared, and check code detection is performed again.

<Method>

(1) Be sure to reset power of both the outdoor and the indoor units.
(2) Turn on the power of the indoor unit prior to the power of the outdoor unit.
(If the power is turned on in reverse order, a check code [E19] (No. of header unit error) is output.)

NOTE) After power reset, it requires usually 3 minutes to power-on due to the initial communication of the system. In some cases, it requires max. 10 minutes.

7-7-4. Remote Controller Distinction Function

This function is provided to distinguish the remote controller connected to the indoor unit from the outdoor unit for a refrigerant circuit system by using switches on the interface P.C. board of the header unit.

<Distinction procedure>

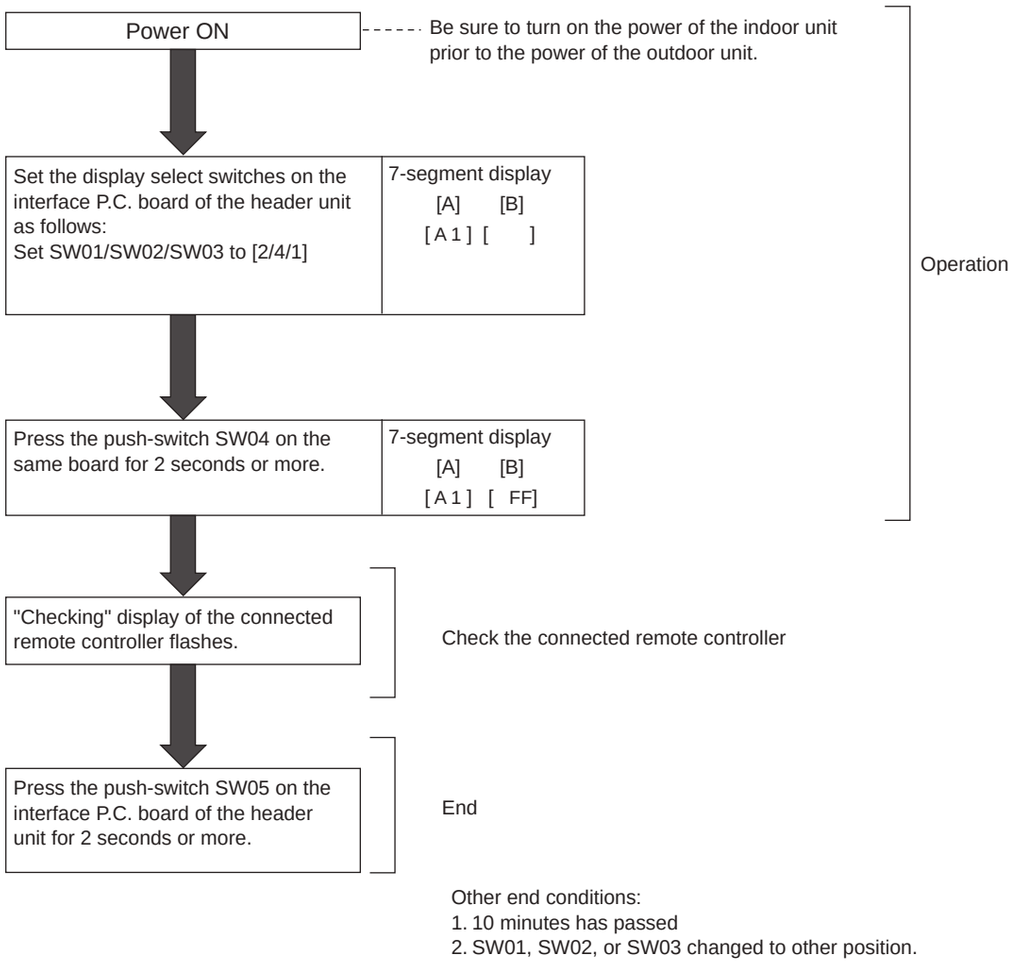

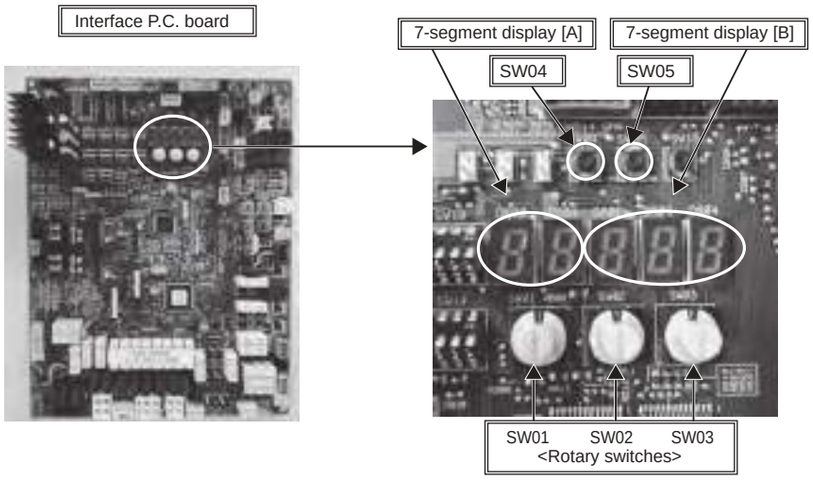

7-7-5. Pulse Motor Valve (PMV) Forced Open/Close Function in Indoor Unit

This function is provided to open or close forcedly PMV for 2 minutes in all the indoor units by the switch operation on the interface P.C. board of the header unit.
This function is also used to open PMV fully when turning off the power and executing an operation.

<Operation>

[Open fully]

Set the switches SW01/SW02/SW03 on the interface P.C. board of the header unit to [2/3/1], and press SW04 for 2 seconds or more.
(Display appears on 7-segment display for 2 minutes as follows.) [P] [FF]

[Close fully]

Set the switches SW01/SW02/SW03 on the interface P.C. board of the header unit to [2/3/1], and press SW05 for 2 seconds or more.
(Display appears on 7-segment display for one minute as follows.) [P] [00]

[Clear]

After 2 minutes (1 minutes for “Close fully”) after setting up, the opening automatically returns to the normal opening.

7-7-6. Pulse Motor Valve (PMV) Forced Open Fully/Close fully Function in Outdoor Unit

This function is provided to forcedly open or close fully P.M.V. (PMV1/PMV3, PMV4) used in the outdoor unit for 2 minutes.

[PMV1 Open fully]

On the interface board of the outdoor unit, set the DIP switch [SW12·bit1] to [OFF], [SW12·bit2] to [OFF], and short-circuit CN30.

[PMV1 Close fully]

On the interface board of the outdoor unit, set the DIP switch [SW12·bit1] to [OFF], [SW12·bit2] to [OFF], and short-circuit CN31.

[PMV3 Open fully]

On the interface P.C. board of the outdoor unit, set the DIP switch [SW12·bit1] to [ON], [SW12·bit2] to [OFF], and shortcircuit CN30.

[PMV3 Close fully]

On the interface P.C. board of the outdoor unit, set the DIP switch [SW12·bit1] to [ON], [SW12·bit2] to [OFF], and shortcircuit CN31.

[PMV4 Open fully]

On the interface board of the outdoor unit, set the DIP switch [SW12·bit1] to [OFF], [SW12·bit2] to [ON], and short-circuit CN30.

[PMV4 Close fully]

On the interface board of the outdoor unit, set the DIP switch [SW12·bit1] to [OFF], [SW12·bit2] to [ON], and short-circuit CN31.

[Clear]

For both open fully and close fully, after 2 minutes, the opening returns to the normal opening.
Be sure to remove the cord used for short-circuit after confirmation, and set the DIP switch [SW12·bit1] to [OFF] and [SW12·bit2] to [OFF].

7-7-7. Solenoid Valve Forced Open/Close Function in Outdoor Unit

This function is provided to forcedly open each solenoid valve mounted in the outdoor unit by the switch operation on the interface P.C. board in the outdoor unit. Use this function to check there is no refrigerant clogging with ON/OFF operation of the solenoid valve.

[Operation]

(1) Set the switches SW01/SW02/SW03 on the interface P.C. board of the outdoor unit to [2/1/3].

(2) When [H. r] is displayed in 7-segment display [A], keep pressing the switch SW04 for 2 seconds or more.

(3) From when [2] is displayed in 7-segment display [B], SV2 is turned on.

(4) After then, ON and OFF of each solenoid valve are exchanged by changing the setup number of the switch SW02.

(ON/OFF output pattern of each solenoid valve is as shown below.)

NOTE 1) Display in 7-segment display [B] is exchanged just when the number of SW02 has been changed; on the other hand, the solenoid valve output is exchanged when SW02 has been kept with the same number for 5 seconds or more.

NOTE 2) The mark [O] in the table indicates that the corresponding solenoid valve is forcedly turned on.

NOTE 3) The mark [-] in the table indicates that ON/OFF of the solenoid valve is controlled based upon the specifications of the air conditioner.

NOTE 4) The mark [×] in the table indicates that the corresponding solenoid valve is forcedly turned off with this operation.

NOTE 5) The case heater output is for both the compressor and accumulator heaters.

SW02	7-segment display [B]	Operation pattern of solenoid valve									Case heater output relay
		SV2	SV51	SV52	SV41	SV42	SV3A	SV3B	SV3C	SV3D	
1	[2]	○	-	-	-	-	-	-	-	-	○
2	[51]	-	○	-	-	-	-	-	-	-	○
3	[52]	-	-	○	-	-	-	-	-	-	○
4	[41]	-	-	-	○	-	-	-	-	-	○
5	[42]	-	-	-	-	○	-	-	-	-	○
7	[3A]	-	-	-	-	-	○	-	-	-	○
8	[3b]	-	-	-	-	-	-	○	-	-	○
9	[3C]	-	-	-	-	-	-	-	○	-	○
10	[3d]	-	-	-	-	-	-	-	-	○	○
11	[3-]	-	-	-	-	-	○	○	○	○	○
12～15		-	-	-	-	-	-	-	-	-	○
16	[ALL]	○	○	○	○	○	○	○	○	○	○

[Clear]

Return switches SW01/SW02/SW03 on the interface P.C. board to [1/1/1].

NOTE) As this function is not based on the specified general control, be sure to release this mode after checking.

7-7-8. Fan Operation Check in Outdoor Unit

This function is provided to check the fan operation of the outdoor unit by using switches on the interface P.C. board in the outdoor unit. The frequency of the fan speed can be controlled by setting of the switches. Use this function to check the operation or abnormal sound in the fan system. And, use this function while the system is stopped.

NOTE) Do not use this function during operation of the compressor. It may damage the compressor.
Two fans move synchronously in two fan model (MMY-MAP1806* to MAP2206*).

[Operation]

(1) Set the switches SW01/SW02/SW03 on the interface P.C. board of the outdoor unit to [2/1/4].

(2) When [F. d] is displayed in 7-segment display [A], keep pressing the switch SW04 for 2 seconds or more.

(3) When [63] is displayed in 7-segment display [B], the fan starts operation. (Max. mode operation)

(4) After that, by changing the setup number of the switches SW02 and SW03, 7-segment display [B] and the fan mode are changed.
(Mode output pattern of the fan is as follows.)

SW02	SW03	7-segment display [B]	Fan mode
1	4	[63]	63
2		[62]	62
3		[61]	61
4		[60]	60
5		[59]	59
6		[58]	58
7		[57]	57
8		[56]	56
9		[55]	55
10		[54]	54
11		[53]	53
12		[52]	52
13		[51]	51
14		[50]	50
15		[49]	49
16		[48]	48
1	5	[47]	47
2		[46]	46
3		[45]	45
4		[44]	44
5		[43]	43
6		[42]	42
7		[41]	41
8		[40]	40
9		[39]	39
10		[38]	38
11		[37]	37
12		[36]	36
13		[35]	35
14		[34]	34
15		[33]	33
16		[32]	32

SW02	SW03	7-segment display [B]	Fan mode
1	6	[31]	31
2		[30]	30
3		[29]	29
4		[28]	28
5		[27]	27
6		[26]	26
7		[25]	25
8		[24]	24
9		[23]	23
10		[22]	22
11		[21]	21
12		[20]	20
13		[19]	19
14		[18]	18
15		[17]	17
16		[16]	16
1	7	[15]	15
2		[14]	14
3		[13]	13
4		[12]	12
5		[11]	11
6		[10]	10
7		[9]	9
8		[8]	8
9		[7]	7
10		[6]	6
11		[5]	5
12		[4]	4
13		[3]	3
14		[2]	2
15		[1]	1
16		[0]	0

[Clear]

This function is cleared by one of the following operations.

(1) When SW01 setting number was changed to other number.

(2) Press-switch SW05 was pressed for 2 seconds or more.

7-7-9. Abnormal Outdoor Unit Discrimination Method By Fan Operating Function

This function is provided to forcedly operate the fan of the outdoor unit in which a check code occurred or the fan of the normal outdoor unit by the switch operation on the interface P.C. board in the header unit.
To specify which one of the follower units connected to the system had problem, use this function for the system stop due to a follower unit problem (Check code [E28]).

[Operation]

<In case to operate the fan in the erroneous outdoor unit only>

(1) Check that the switches SW01/SW02/SW03 on the interface P.C. board in the header unit are set to [1/1/1].

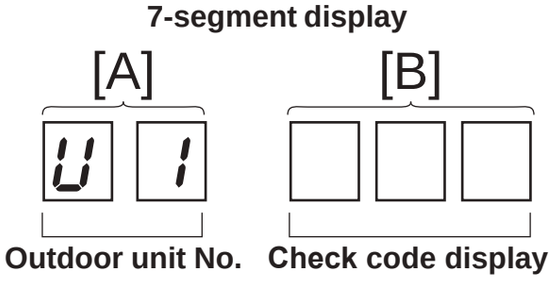

(2) Press the push-switch SW04 for 2 seconds or more.
(3) [E 1] is displayed on 7-segment display [A].
(4) The fan of the outdoor unit in which problem occurred starts operation within approx. 10 seconds after [E 1] was displayed.

<In case to operate the fans in all the normal outdoor units>

(1) Check that the switches SW01/SW02/SW03 on the interface P.C. board in the header unit are set to [1/1/1].
(2) Press the push-switches SW04 and SW05 at the same time for 2 seconds or more.
(3) [E 0] is displayed on 7-segment display [A].
(4) The fans of all the normal outdoor units start operation with the Max. fan speed within approx. 10 seconds after [E 0] was displayed.

[Release]

Press the push-switch SW05 on the interface P.C. board in the header unit for 2 seconds or more.
The outdoor fan which was operated stops.
* Check that [U. 1] is displayed on 7-segment display [A], and then finish the work.

7-7-10. Manual Adjustment Function of Outside Temperature (TO) Sensor

This function is provided to fix TO sensor value manually by the switch operation on the interface P.C. board in the outdoor unit. When the unit stops abnormally due to TO sensor failure, etc, an emergent operation is available by setting up the value manually to position near the current outside temperature.

[Operation]

(1) Set the rotary switches on the interface P.C. board to numbers as follows:
- SW01/SW02/SW03 to [2/1/15]
- 7-segment display: [t o]

(2) Keep pressing the push-switch SW04 on the interface P.C. board for 1 second or more. The mode changes to the TO sensor value fix manual mode.

(3) As shown in the following table, TO sensor value can be fixed by setting the rotary switch SW02 on the interface P.C. board.

[Clear]

Return SW01/SW02/SW03 on the interface P.C. board in the outdoor unit to [1/1/1].

SW02	7-segment display [B]	TO sensor value
1	[10]	10°C
2	[15]	15°C
3	[20]	20°C
4	[25]	25°C
5	[30]	30°C
6	[35]	35°C
7	[40]	40°C
8	[43]	43°C
9	[45]	45°C
10	[–15]	-15°C
11	[–10]	-10°C
12	[– 5]	-5°C
13	[0]	0°C
14	[2]	2°C
15	[5]	5°C
16	[7]	7°C

NOTE) If operated with TO sensor fixed by this function, the system control operation of the air conditioner may not be based on the specification of the product. Therefore an emergent operation should be restricted to a day or so.

When the outside temperature is 45ºC or more, set to 45ºC (SW02="9")

<Service support function list>

SW01	SW02	SW03	7-segment display [A]	Function contents
2	1	1	[J . C]	Refrigerant circuit and control communication line check function (Cooling operation)
	2		[J . H]	Refrigerant circuit and control communication line check function (Heating operation)
	3		[P .]	Indoor PMV forced full open function
	4		[A . 1]	Indoor remote controller discriminating function
	5		[C .]	Cooling test operation function
	6		[H .]	Heating test operation function
	7		[C . H]	Indoor collective start/stop (ON/OFF) function
	9		[F .]	Fan test operation function
	11		[r . d]	Outdoor refrigerant recovery operation function (Pump down function)
	16		[E . r]	Check code clear function

2	1~16	3	[H . r]	Solenoid valve forced open/close function
2	1~16	4~7	[F . d]	Fan forced operation function
2	1~16	15	[t . o]	Outside temperature sensor manual adjustment function

16	1~16	1	[0 1]~[1 6]	Indoor No. 1 to 16 unit	Indoor individual start/stop (ON/OFF) function
		2	[1 7]~[3 2]	Indoor No. 17 to 32 unit	
		3	[3 3]~[4 8]	Indoor No. 33 to 48 unit	
		4	[4 9]~[6 4]	Indoor No. 49 to 64 unit	

SW01	SW02	SW03	7-segment display [A/B]	Function contents
1	1	1	[U 1] [E28]	Follower unit check code / Corresponding unit fan operation function

7-7-11. Refrigerant leakage detection

The refrigerant leakage can be confirmed by using the switches on Interface PCB of the outdoor unit.
If there is a leak, the location must be found in order to recover the refrigerant.
After that, implement appropriate countermeasure and refill the refrigerant to its standard volume.

Refrigerant leaks can be detected by comparing the Actual opening of PMV with the Calculated opening of PMV* during the operation.
* Calculated opening of PMV: calculated from the initial value(C.i/H.i), the pressure sensor value, the compressor's rotation speed, and the opening of PMV. The initial values are automatically saved when the specified conditions are met.
(A leak can be detected only when C.i/H.i = 1)

[Operation]

(1) Confirming the refrigerant leakage
Set SW01 to 03 as shown in the following table to confirm whether the leaks are being detected.
(It also can be confirmed by remote control monitor function. Refer to 7-7-12. Monitor function of remote controller switch.)

(2) Clearing the initial value
If the system is changed (e.g. indoor units are increased/replaced, outdoor units are moved, or refrigerant is refilled/increased) it is necessary to clear the initial value that had been saved.
Make sure that the compressor has stopped, and then press and hold SW04 for at least 5 seconds.

SW01	SW02	SW03	Display detail		
2	13	14	Refrigerant leakage detection	A	[L. d]
				B	Normal: [… … 0] Possibility of leakage: [… … 1] Clear the data: […C.L] (Only Display for 5 seconds)

(3) Checking the record of the initial value
Set SW01 to 03 as shown in the following table to confirm the record of the initial value.

SW01	SW02	SW03	Display detail		
2	14	14	Cooling initial value	A	[C. i]
				B	Incomplete: [… … 0] Completed: [… … 1]
2	15	14	Heating initial value	A	[H. i]
				B	Incomplete: [… … 0] Completed: [… … 1]

[Clear]
Return SW01/SW02/SW03 on the Interface PCB in the outdoor unit to [1/1/1] .

NOTE)
(a) During the operation, the slow leaks can be detected.
However, if the air-conditioner cannot cooling down / cannot warming up / make an unusual stop, the slow leaks might not be detectable. The fast leaks always cannot be detected.
(b) Poor refrigerant circulation may be detected as a refrigerant leaks.
(e.g. plugged strainers / capillaries, malfunction / clogging of the PMV / 2-way valve / 4-way valve)
(c) Due to the outside temperature, the initial value may not be recorded, or it may be impossible to determine the leakage.
(d) The initial value cannot be saved until the accumulated operating time has reached at least 20 hours.
(e) The initial value cannot be saved if the indoor unit's operating ratio is low.
(f) If the following indoor units are connected, leakage determination is not possible.
・Air to air heat exchanger with DX coil unit

7-7-12. Monitor Function of Remote Controller Switch

When using a remote controller with the model name RBC-AMT32E, the following monitor functions can be used.

Switching to the service monitor mode

<Content>

The sensor temperature or operation status of the remote controller, indoor unit, or the outdoor unit can be known by switching to the service monitor mode from the remote controller.

[Procedure]

1 **Push TEST + CL buttons simultaneously for 4 seconds or more to call up the service monitor mode.**
The service monitor goes on, and temperature of the CODE No. 00 is firstly displayed.

2 **Push the temperature setup TEMP. buttons to select the CODE No. to be monitored.**
For displayed codes, refer to the table next page.

3 **Push SET button to determine the item to be monitored.**
Then monitor the sensor temperature or operation status of indoor unit and the outdoor unit in the corresponding refrigerant line.

4 **Pushing TEST button returns the display to the normal display.**

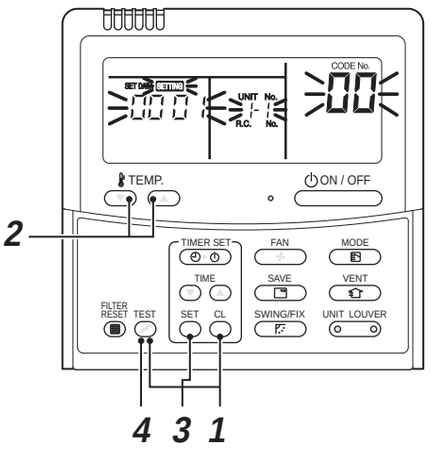

	CODE No.	Data name	Display format	Unit	Remote controller display example
Indoor unit data *2	00	Room temperature (Use to control)	×1	°C	[0024]=24°C
	01	Room temperature (Remote controller)	×1	°C	
	02	Indoor suction air temperature (TA)	×1	°C	
	03	Indoor coil temperature (TCJ)	×1	°C	
	04	Indoor coil temperature (TC2)	×1	°C	
	05	Indoor coil temperature (TC1)	×1	°C	
	06	Indoor discharge air temperature (TF) *1	×1	°C	
	08	Indoor PMV opening	×1/10	pls	[0150]=1500pls
	F3	Filter sign time	×1	h	[2500] = 2500h
	F9	Suction temperature of air to air heat exchanger (TSA) *1	×1	℃	[0024] = 24℃
	FA	Outside air temperature (TOA)*1	×1	℃	
System data	0A	No. of connected indoor units	×1	unit	[0048]=48 units
	0B	Total horsepower of connected indoor units	×10	HP	[0415]=41.5HP
	0C	No. of connected outdoor units	×1	unit	[0003]=3 units
	0D	Total horsepower of outdoor units	×10	HP	[0420]=42HP

	CODE No.			Data name	Display format	Unit	Remote controller display example
	U1	U2	U3				
Outdoor unit individual data 1 *3	10	20	30	High-pressure sensor detention pressure (Pd)	×100	MPa	[0123] = 1.23MPa
	11	21	31	Low-pressure sensor detention pressure (Ps)	×100	MPa	
	12	22	32	Compressor 1 discharge temperature (TD1)	×1	℃	[0024] = 24℃
	13	23	33	Compressor 2 discharge temperature (TD2)	×1	℃	
	15	25	35	Outdoor coil temperature (TE1)	×1	℃	
	16	26	36	Outdoor coil temperature (TE2)	×1	℃	
	17	27	37	Outdoor coil temperature (TG1)	×1	℃	
	18	28	38	Outdoor coil temperature (TG2)	×1	℃	
	19	29	39	Outside ambient temperature (TO)	×1	℃	
	1A	2A	3A	Suction temperature (TS1)	×1	℃	
	1C	2C	3C	Suction temperature (TS3)	×1	℃	
	1D	2D	3D	Temperature at liquid side (TL1)	×1	℃	
	1E	2E	3E	Temperature at liquid side (TL2)	×1	℃	
	1F	2F	3F	Temperature at liquid side (TL3)	×1	℃	

	CODE No.			Data name	Display format	Unit	Remote controller display example
	U1	U2	U3				
Outdoor unit individual data 2 *4	50	60	70	PMV1 opening	×1	pls	[0500] = 500pls
	51	61	71	PMV3 opening	×1	pls	
	52	62	72	PMV4 opening	×1	pls	
	53	63	73	1 fan model : Compressor 1 curent (I1) 2 fan model : Compressor 1 and Outdoor fan 1 current (I1)	×10	A	[0135] = 13.5A
	54	64	74	1 fan model : Compressor 2 and Outdoor fan 1 current (I2) 2 fan model : Compressor 2 and Outdoor fan 2 current (I2)	×10	A	
	56	66	76	Compressor 1 revolutions	×10	rps	[0642] = 64.2rps
	57	67	77	Compressor 2 revolutions	×10	rps	
	59	69	79	Outdoor fan mode	×1	mode	[0058] = 58 mode
	5A	6A	7A	Compressor IPDU 1 heat sink temperature	×1	℃	[0024] = 24℃
	5B	6B	7B	Compressor IPDU 2 heat sink temperature	×1	℃	
	5D	6D	7D	Outdoor fan IPDU 1 heat sink temperature	×1	℃	
	5E	6E	7E	Outdoor fan IPDU 2 heat sink temperature	×1	℃	
	5F	6F	7F	Outdoor unit horsepower	×1	HP	[0016] = 16HP

	CODE No.	Data name	Display format	Unit	Remote controller display example
Outdoor unit individual data 3 *5	90	Heating/cooling recovery controlled	0: Normal 1: Recovery controlled		[0010]=Heating recovery controlled [0001]=Cooling recovery controlled
	91	Pressure release	0: Normal 1: Release controlled		[0010]=Pressure release controlled
	92	Discharge temperature release			[0001]=Discharge temperature release controlled
	93	Follower unit release (U2/U3 outdoor units)			[0100]=U2 outdoor unit release controlled [0010]=U3 outdoor unit release controlled [0001]=U4 outdoor unit release controlled

*1 Only a part of indoor unit types is installed with the discharge air temperature sensor. This temperature is not displayed for other types.
*2 When the units are connected to a group, data of the header indoor unit only can be displayed.
*3 The first digit of an CODE No. indicates the outdoor unit number.
*4 The upper digit of an CODE No. -4 indicates the outdoor unit number.
1∗, 5∗ ... U1 outdoor unit (Header unit)
2∗, 6∗ ... U2 outdoor unit (Follower unit 1)
3∗, 7∗ ... U3 outdoor unit (Follower unit 2)
5 Only the CODE No. 9 of U1 outdoor unit (Header unit) is displayed.

7-8. SMMS WAVE TOOL FOR SMARTPHONE

The NFC TAG DEVICE of the Outdoor unit communicates with SMARTPHONE that simplifies the install, the test operation and the maintenance of the SMMS-e. *NFC (Near Field Communication)
As for the details, refer to the Operation Manual of "SMMS WAVE TOOL FOR SMARTPHONE"
●You can download the Application and the Operating Manual from the below URL or QR code.

URL : http://www.toshiba-carrier.co.jp/global/appli/smms_wave_tool/

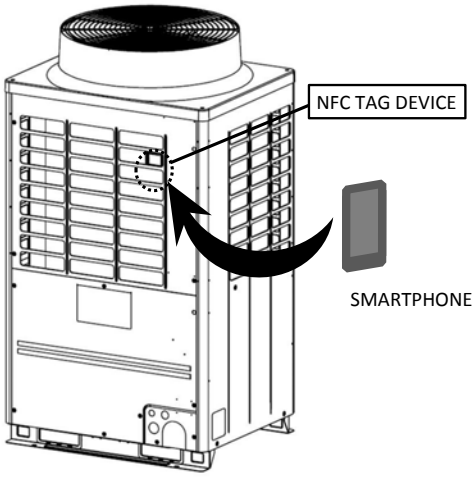

7-8-1. Prohibition/Permission of the NFC Setting

・This Application enables the functions of the auto-address setup and the test operation of the outdoor unit with Smartphone within 48 hours from the power input to the outdoor unit.
・You should decide whether to make use of the functions of the auto-address setup and test operation at its own responsibility and also be sure to confirm notices in the Operating Manual before performing the test operation.
・If you want to disable the functions of the auto-address setup and the test operation, perform the following operations.

■Switch setting of some functions prohibition

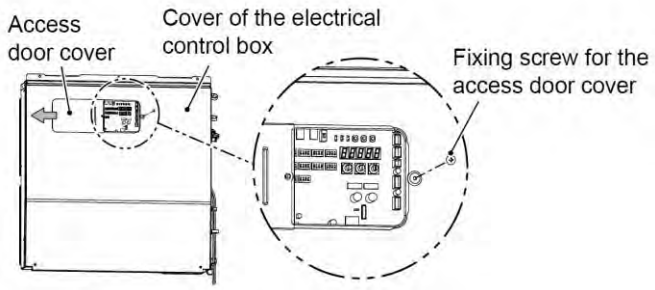

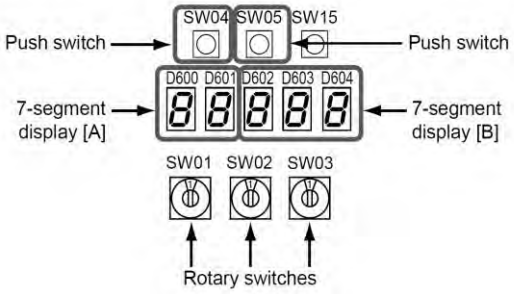

How to set the NFC operation all time prohibition

Follow the below procedure.

Step	Rotaly switch			Push switch	7-segment display	NFC operation setting
	SW01	**SW02**	**SW03**	**SW04**	**[A] [B]**	
(1)	2	1	14	-	[nF] [c.00]	(Default setting) After the power input, :below 48 hours [NFC operation permit] :more than 48 hours [NFC operation prohibit]
(2)	2	1	14	Press for more than 5 secs	[nF] [c.01]	NFC operation all time prohibition
(3)	1	1	1	-	[U.1.] [- - -]	Return the switch

How to set the NFC operation all time permission

Follow the below procedure.

Step	Rotaly switch			Push switch	7-segment display	NFC operation setting
	SW01	**SW02**	**SW03**	**SW04**	**[A] [B]**	
(1)	2	1	14	-	[nF] [c.00]	(Default setting) After the power input, :below 48 hours [NFC operation permit] :more than 48 hours [NFC operation prohibit]
	2	1	14	(Press 5 secs)	[nF] [c.01]	NFC operation all time prohibition
(2)	2	1	14	Press for more than 10 secs	[nF] [c.02]	NFC operation all time permission
(3)	1	1	1	-	[U.1.] [- - -]	Return the switch

*Do it again if the 7-segment display is different from the above.

*The functions other than the auto-address setup and test operation of this Application can work normally even if the functions of the auto-address setup and the test operation are disabled.

7-8-2. Confirmation for the generation of the error of the NFC

When you can not read out the information of the NFC Tag Device with your Smartphone, perform the following operations after restarting the power supply of the outdoor unit.

If there is no problem, refer to the Operation Manual of "SMMS WAVE TOOL FOR SMARTPHONE".

Step	Rotaly switch			Push switch	7-segment display	NFC-I/F board communication
	SW01	**SW02**	**SW03**	**SW04**	**[A] [B]**	
(1)	2	16	14	-	[nF] [c.Er]	Abnormal
					[nF] [c.00]	Normal
(2)	1	1	1	-	[U.1.] [- - -]	Return the switch

Trademark

Android is a trademark or registered trademark of Google Inc.

QR code is a trademark or registered trademark of DENSO WAVE Inc.

7-9. DRED (Demand response enabling device) (MMY-MAP***6HT8P-A)

This model supports only DRM1.

AS／NZS 4755	DRM1 ☑	DRM2 ☐	DRM3 ☐

■ Safety precautions

- Read these “Safety precautions” carefully before installation.
- Install in accordance with the wiring rules (AS/NZS 3000).
- The precautions described below include important items regarding safety.
  Observe them without fail.
- The manufacturer shall not assume any liability for the damage caused by not observing the description of this manual.

⚠ WARNING

- Turn off the main power supply switch or breaker before attempting installation.
  Make sure all power switches are off. Failure to do so may cause electric shock.
- Connect the connecting wire correctly.
  If the connecting wire is incorrect, electric parts may be damaged.
- Ensure that all terminals are securely fixed, so preventing any external forces having a negative effect on the terminals.
- Do not connect the DRED mains cable to the terminal block of the outdoor unit.
  Improper installation may result in fire.
- Connect the demand connecting wires so that they do not come into contact with the refrigerant cycle parts or refrigerant pipes.
  Wire breakage or water intrusion may cause electric shock or fire.
- Do not screw the DRED signal receiver directly to the outdoor unit.
  The screw may damage the internal parts and cause an electric shock, fire or refrigerant leak.

⚠ CAUTION

- **Wear heavy gloves during the installation work to avoid injury.**

■ Connection procedure

This air conditioner complies with AS/NZS 4755.3.1.
DRM available: DRM1
The terminal block meets ELV requirements.

Demand response mode	Description
DRM1	Compressor off
DRM2	Not available
DRM3	Not available

Parts layout of the electrical control box

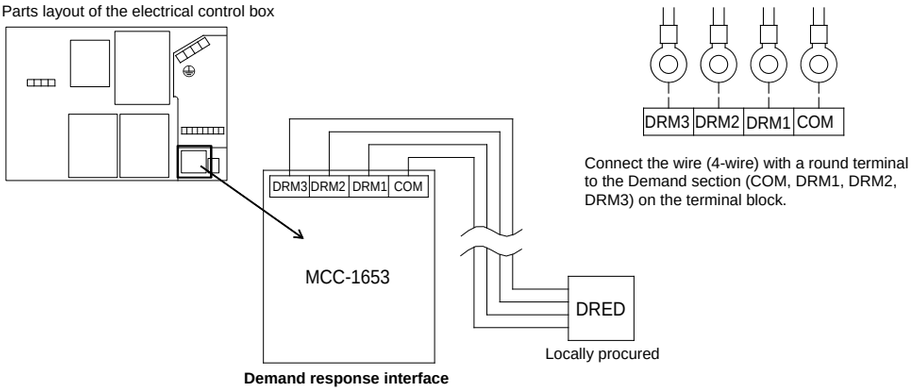

⚠ WARNING

- Do not connect the DRED mains cable to the terminal block of the outdoor unit.
  Improper installation may result in fire.
- For the power supply of the DRED, prepare exclusive power supply separated from that of the outdoor unit.

■ Wiring procedure

- Bind securely together the communication wires and the demand connecting wires with the cord clamp to be not affected by external forces.
- If the demand connecting wires contain DRED terminal block connections, confirm to fix it so that DRED terminal block connections comes to the left side from the cord clamp.

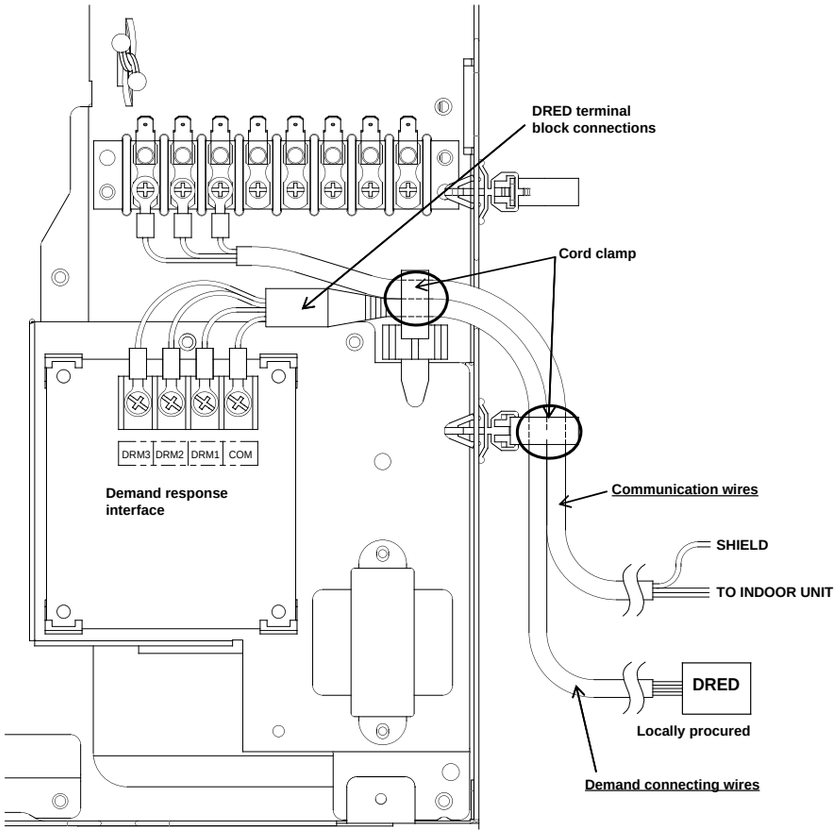

8 TROUBLESHOOTING

8-1. Overview

(1) Before engaging in troubleshooting

(a) Applicable models

All Super Module Multi System (SMMS-e) models.

(Indoor units: MM∗-AP∗∗∗, Outdoor units: MMY-MAP∗∗∗6∗)

(b) Tools and measuring devices required

- Screwdrivers (Philips, flat head), spanners, long-nose pliers, nipper, pin to push reset switch, etc.
- Multimeter, thermometer, pressure gauge, etc.

(c) Things to check prior to troubleshooting (behaviors listed below are normal)

NO.	Behavior	Possible cause
1	A compressor would not start	• Could it just be the 3-minute delay period (3 minutes after compressor shutdown)? • Could it just be the air conditioner having gone thermostats OFF? • Could it just be the air conditioner operating in fan mode or put on the timer? • Could it just be the system going through initial communication?
2	An indoor fan would not start	• Could it just be cold air discharge prevention control, which is part of heating?
3	An outdoor fan would not start or would change speed for no reason	• Could it just be cooling operation under low outside temperature conditions? • Could it just be defrosting operation?
4	An indoor fan would not stop	• Could it just be the elimination of residual heat being performed as part of the air conditioner shutdown process after heating operation?
5	The air conditioner would not respond to a start/stop command from a remote controller	• Could it just be the air conditioner operation under external or remote control?

⚠ CAUTION

The cooling performance may decling considerably when total operating capacity of cooling indoor units is less than 4 HP WHILE AMBIENT TEMPERATURE IS BELOW 0°C.

(2) Troubleshooting procedure

When a problem occurs, proceed with troubleshooting in accordance with the procedure shown below.

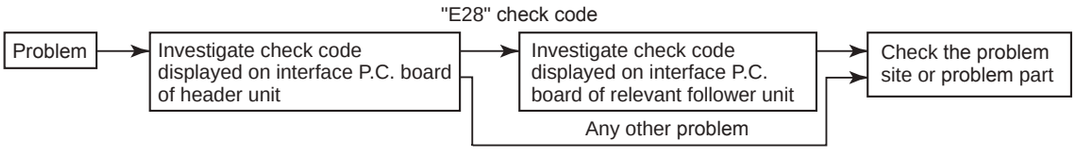

NOTE

Rather than a product trouble (see the List of Check Codes below), the problem could have been caused by a microprocessor malfunction attributable to a poor quality of the power source or an external noise. Check for possible noise sources, and shield the remote controller wiring and signal wires as necessary.

8-2. Troubleshooting Method

The remote controllers (main remote controller and central control remote controller) and the interface P.C. board of an outdoor unit are provided with an LCD display (remote controller) or a 7-segment display (outdoor interface P.C. board) to display operational status. Using this self-diagnosis feature, the problem site/problem part may be identified in the event of a problem by following the method described below.

The list below summarizes check codes detected by various devices. Analyze the check code according to where it is displayed and work out the nature of the problem in consultation with the list.

- When investigating a problem on the basis of a display provided on the indoor remote controller or TCC-LINK central control remote controller - See the “TCC-LINK remote control or main remote controller display” section of the list.
- When investigating a problem on the basis of a display provided on an outdoor unit - See the “Outdoor 7-segment display” section of the list.
- When investigating a problem on the basis of a wireless remote controller-controlled indoor unit - See the “Light sensor indicator light block” section of the list.

List of Check Codes (Indoor Unit)

(Check code detected by indoor unit)

IPDU: Intelligent Power Drive Unit (Inverter P.C. board)
○ : Lighting, ◎ : Flashing, ● : Goes off
ALT.: Flashing is alternately when there are two flashing LED
SIM: Simultaneous flashing when there are two flashing LED

Check code			Display of receiving unit				Typical problem site	Description of Check code
TCC-LINK central control or main remote controller display	Outdoor 7-segment display		Indicator light block					
		Sub-code	Operation	Timer	Ready	Flash		
E03	–	–	◎	●	●		Indoor-remote controller periodic communication error	Communication from remote controller or network adaptor has been lost (so has central control communication).
E04	–	–	●	●	◎		Indoor-outdoor periodic communication error	Signals are not being received from outdoor unit.
E08	E08	Duplicated indoor address	◎	●	●		Duplicated indoor address	Indoor unit detects address identical to its own.
E10	–	–	◎	●	●		Indoor inter-MCU communication error	MCU communication between main controller and motor microcontroller is faulty.
E18	–	–	◎	●	●		Error in periodic communication between indoor header and follower unit	Periodic communication between indoor header and follower units cannot be maintained.
F01	–	–	◎	◎	●	ALT	Indoor heat exchanger temperature sensor (TCJ) error	Heat exchanger temperature sensor (TCJ) has been open/short-circuited.
F02	–	–	◎	◎	●	ALT	Indoor heat exchanger temperature sensor (TC2) error	Heat exchanger temperature sensor (TC2) has been open/short-circuited.
F03	–	–	◎	◎	●	ALT	Indoor heat exchanger temperature sensor (TC1) error	Heat exchanger temperature sensor (TC1) has been open/short-circuited.
F10	–	–	◎	◎	●	ALT	Room air temperature sensor (TA/TSA) error	Room air temperature sensor (TA) has been open/short-circuited.
F11	–	–	◎	◎	●	ALT	Discharge air temperature sensor (TF/TFA) error	Discharge air temperature sensor (TF) has been open/short-circuited.
F17	–	–	◎	◎	○	ALT	Outside air suction temperature sensor (TOA) error	Open/Short of outside air suction temperature sensor (TOA) was detected.
F18	–	–	◎	◎	○	ALT	Indoor air suction temperature sen sor (TRA) error	Discharge air temperature sensor (TF) has been open/short-circuited.
F29	–	–	◎	◎	●	SIM	P.C. board or other indoor error	Open/Short of indoor air suction temperature sensor (TRA) was detected.
L03	–	–	◎	●	◎	SIM	Duplicated indoor group header unit	There is more than one header unit in group.
L07	–	–	◎	●	◎	SIM	Connection of group control cable to stand-alone indoor unit	There is at least one stand-alone indoor unit to which group control cable is connected.
L08	L08	–	◎	●	◎	SIM	Indoor group address not set	Address setting has not been performed for one or more indoor units (also detected at outdoor unit end).
L09	–	–	◎	●	◎	SIM	Indoor capacity not set	Capacity setting has not been performed for indoor unit.
L20	–	–	◎	○	◎	SIM	Duplicated central control address	There is duplication in central control address setting.
L30	L30	Detected indoor unit No.	◎	○	◎	SIM	Indoor external error input (interlock)	Unit shutdown has been caused by external error input (CN80).
P01	–	–	●	◎	◎	ALT	Indoor AC fan error	Indoor AC fan error is detected (activation of fan motor thermal relay).
P10	P10	Detected indoor unit No.	●	◎	◎	ALT	Indoor overflow error	Float switch has been activated.
P12	–	–	●	◎	◎	ALT	Indoor DC fan error	Indoor DC fan error (e.g. overcurrent or lock-up) is detected.
P31	–	–	◎	●	◎	ALT	Other indoor unit error	Follower unit cannot be operated due to header unit alarm (E03/L03/L07/L08).

(Check code detected by main remote controller)

Check code			Display of receiving unit				Typical problem site	Description of problem
Main remote controller	Outdoor 7-segment display		Indicator light block					
		Sub-code	Operation	Timer	Ready	Flash		
E01	–	–	◎	●	●		No master remote controller, faulty remote controller communication (reception)	Signals cannot be received from indoor unit; master remote controller has not been set (including two remote controller control).
E02	–	–	◎	●	●		Faulty remote controller communication (transmission)	Signals cannot be transmitted to indoor unit.
E09	–	–	◎	●	●		Duplicated master remote controller	Both remote controllers have been set as master remote controller in two remote controller control (alarm and shutdown for header unit and continued operation for follower unit)

(Check code detected by central control device)

Check code			Display of receiving unit				Typical problem site	Description of problem
TCC-LINK central control	Outdoor 7-segment display		Indicator light block					
		Sub-code	Operation	Timer	Ready	Flash		
C05	–	–	No indication (when main remote controller also in use)				Faulty central control communication (transmission)	Central control device is unable to transmit signal due to duplication of central control device.
C06	–	–					Faulty central control communication (reception)	Central control device is unable to receive signal.
–	–	–					Multiple network adapters	Multiple network adapters are connected to remote controller communication line.
C12	–	–	–				Blanket alarm for general-purpose device control interface	Device connected to general-purpose device control interface for TCC-LINK is faulty.
P30	–	–	As per alarm unit (see above)				Group control follower unit error	Group follower unit is faulty (unit No. and above detail [∗∗∗] displayed on main remote controller)

Note: The same error, e.g. a communication error, may result in the display of different check codes depending on the device that detects it. Moreover, check codes detected by the main remote controller/central control device do not necessarily have a direct impact on air conditioner operation.

List of Check Codes (Outdoor Unit)

(Check code detected by SMMS-e outdoor interface - typical examples)

If "HELLO" is displayed on the oudoor 7-segment for 1 minute or more, turn off the power supply once and then turn on the power supply again after passage of 30 seconds or more. When the same symptom appears, it is considered there is a possibility of I/F board error.

IPDU: Intelligent Power Drive Unit (Inverter P.C. board)
○ : Lighting, ◎ : Flashing, ● : Goes off
ALT.: Flashing is alternately when there are two flashing LED
SIM: Simultaneous flashing when there are two flashing LED

Check code			Display of receiving unit				Typical problem site	Description of problem
Outdoor 7-segment display		TCC-LINK central control or main remote controller display	Indicator light block					
	Sub-code		Operation	Timer	Ready	Flash		
E06	Number of indoor units from which signal is received normally	E06	●	●	◎		Signal lack of indoor unit	Indoor unit initially communicating normally fails to return signal (reduction in number of indoor units connected).
E07	–	(E04)	●	●	◎		Indoor-outdoor communication circuit error	Signal cannot be transmitted to indoor units (→ indoor units left without communication from outdoor unit).
E08	Duplicated indoor address	(E08)	◎	●	●		Duplicated indoor address	More than one indoor unit are assigned same address (also detected at indoor unit end).
E12	01: Indoor-outdoor communication 02: Outdoor-outdoor communication	E12	◎	●	●		Automatic address starting error	• Indoor automatic address setting is started while automatic address setting for equipment in other refrigerant line is in progress. • Outdoor automatic address setting is started while automatic address setting for indoor units is in progress.
E15	–	E15	●	●	◎		Indoor unit not found during automatic address setting	Indoor unit fails to communicate while automatic address setting for indoor units is in progress.
E16	00: Overloading 01: Number of units connected	E16	●	●	◎		Too many indoor units connected/overloading	Combined capacity of indoor units is too large. The maximum combined of indoor units shown in the specification table.
E19	00: No header unit 02: Two or more header units	E19	●	●	◎		Error in number of outdoor header units	There is no or more than one outdoor header unit in one refrigerant line.
E20	01: Connection of outdoor unit from other refrigerant line 02: Connection of indoor unit from other refrigerant line	E20	●	●	◎		Connection to other refrigerant line found during automatic address setting	Indoor unit from other refrigerant line is detected while indoor automatic address setting is in progress.
E23	–	E23	●	●	◎		Outdoor-outdoor communication transmission error	Signal cannot be transmitted to other outdoor units.
E25	–	E25	●	●	◎		Duplicated follower outdoor address	There is duplication in outdoor addresses set manually.
E26	Address of outdoor unit from which signal is not received normally	E26	●	●	◎		Signal lack of outdoor unit	Follower outdoor unit initially communicating normally fails to do so (reduction in number of follower outdoor units connected).
E28	Detected outdoor unit No.	E28	●	●	◎		Outdoor follower unit error	Outdoor header unit detects fault relating to follower outdoor unit (detail displayed on follower outdoor unit).
E31	A3-IPDU 1 / A3-IPDU 2 / Fan-IPDU 1 / Fan-IPDU 2 01: ○ ; 02: ○ ; 03: ○ ○ ; 08: ○ ; 09: ○ ○ ; 0A: ○ ○ ; 0B: ○ ○ ○ 10: ○ ; 11: ○ ; 12: ○ ; 13: ○ ○ ; 18: ○ ○ ; 19: ○ ○ ; 1A: ○ ○ ; 1B: ○ ○ ○ Circle (O): Faulty IPDU 80 : Communication error between MCU and Sub MCU	E31	●	●	◎		IPDU communication error Sub MCU communication error	There is no communication between IPDUs (P.C. boards) in inverter box.
F04	–	F04	◎	◎	○	ALT	Outdoor discharge temperature sensor (TD1) error	Outdoor discharge temperature sensor (TD1) has been open/short-circuited.
F05	–	F05	◎	◎	○	ALT	Outdoor discharge temperature sensor (TD2) error	Outdoor discharge temperature sensor (TD2) has been open/short-circuited.
F06	01: TE1 02: TE2	F06	◎	◎	○	ALT	Outdoor heat exchanger liquid side temperature sensor (TE1, TE2) error	Outdoor heat exchanger liquid side temperature sensors (TE1, TE2) have been open/short-circuited.
F07	01: TL1 02: TL2 03: TL3 –	F07	◎	◎	○	ALT	Outdoor liquid temperature sensor (TL1,TL2,TL3) error	Outdoor liquid temperature sensor (TL1,TL2,TL3) has been open/short-circuited.
F08	–	F08	◎	◎	○	ALT	Outdoor outside air temperature sensor (TO) error	Outdoor outside air temperature sensor (TO) has been open/short-circuited.
F09	01: TG1 02: TG2						Outdoor heat exchanger gas side temperature sensor (TG1, TG2) error	Outdoor heat exchanger gas side temperature sensors (TG1, TG2) have been open/short-circuited.

Check code			Display of receiving unit				Typical problem site	Description of problem
Outdoor 7-segment display		TCC-LINK central control or main remote controller display	Indicator light block					
	Sub-code		Operation	Timer	Ready	Flash		
F12	01: TS1 03: TS3	F12	◎	◎	○	ALT	Outdoor suction temperature sensor (TS1,TS3) error	Outdoor suction temperature sensor (TS1,TS3) has been open/short-circuited.
F15	–	F15	◎	◎	○	ALT	Outdoor temperature sensor (TE1,TL1) wiring error	Wiring error in outdoor temperature sensors (TE1,TL1) has been detected.
F16	–	F16	◎	◎	○	ALT	Outdoor pressure sensor (Pd, Ps) wiring error	Wiring error in outdoor pressure sensors (Pd, Ps) has been detected.
F23	–	F23	◎	◎	○	ALT	Low pressure sensor (Ps) error	Output voltage of low pressure sensor (Ps) is zero.
F24	–	F24	◎	◎	○	ALT	High pressure sensor (Pd) error	Output voltage of high pressure sensor (Pd) is zero or provides abnormal readings when compressors have been turned off.
F31	–	F31	◎	◎	○	SIM	Outdoor EEPROM error	Outdoor EEPROM is faulty (alarm and shutdown for header unit and continued operation for follower unit)
H05	–	H05	●	◎	●		Outdoor discharge temperature sensor (TD1) wiring error	Wiring/installation error or detachment of outdoor discharge temperature sensor (TD1) has been detected.
H06	–	H06	●	◎	●		Activation of low-pressure protection	Low pressure (Ps) sensor detects abnormally low operating pressure.
H07	–	H07	●	◎	●		Low oil level protection	Temperature sensor for oil level detection (TK1,TK2,TK4,TK5) detects abnormally low oil level.
H08	01: TK1 sensor error 02: TK2 sensor error 04: TK4 sensor error 05: TK5 sensor error	H08	●	◎	●		Error in temperature sensor for oil level detection (TK1,TK2,TK4,TK5)	Temperature sensor for oil level detection (TK1,TK2,TK4,TK5) has been open/short-circuited.
H15	–	H15	●	◎	●		Outdoor discharge temperature sensor (TD2) wiring error	Wiring/installation error or detachment of outdoor discharge temperature sensor (TD2) has been detected.
H16	01: TK1 oil circuit error 02: TK2 oil circuit error 04: TK4 oil circuit error 05: TK5 oil circuit error	H16	●	◎	●		Oil level detection circuit error	No temperature change is detected by temperature sensor for oil level detection (TK1,TK2,TK4,TK5) despite compressor having been started.
L04	–	L04	◎	○	◎	SIM	Duplicated outdoor refrigerant line address	Identical refrigerant line address has been assigned to outdoor units belonging to different refrigerant piping systems.
L06	Number of priority indoor units (check code L05 or L06 depending on individual unit)	L05	◎	●	◎	SIM	Duplicated priority indoor unit (as displayed on priority indoor unit)	More than one indoor unit have been set up as priority indoor unit.
		L06	◎	●	◎	SIM	Duplicated priority indoor unit (as displayed on indoor unit other than priority indoor unit)	More than one indoor unit have been set up as priority indoor unit.
L08	–	(L08)	◎	●	◎	SIM	Indoor group address not set	Address setting have not been performed for one or more indoor units (also detected at indoor end).
L10	–	L10	◎	○	◎	SIM	Outdoor capacity not set	Outdoor unit capacity has not been set (after P.C. board replacement).
L17	–	L17	◎	○	◎	SIM	Outdoor model incompatibility error	Old model outdoor unit (prior to 6 series) has been connected.
L23	–	L23	◎	○	◎	SIM	SW setting mistake	Bit 3 and 4 of SW17 are turning on.
L28	–	L28	◎	○	◎	SIM	Too many outdoor units connected	More than three outdoor units have been connected.

Check code			Display of receiving unit				Typical problem site	Description of problem
Outdoor 7-segment display		TCC-LINK central control or main remote controller display	Indicator light block					
	Sub-code		Operation	Timer	Ready	Flash		
L29	<table><tr><th></th><th>A3-IPDU</th><th></th><th>Fan-IPDU</th><th></th><th></th><th>A3-IPDU</th><th></th><th>Fan-IPDU</th><th></th></tr><tr><th></th><th>1</th><th>2</th><th>1</th><th>2</th><th></th><th>1</th><th>2</th><th>1</th><th>2</th></tr><tr><td>01</td><td>○</td><td></td><td></td><td></td><td>10</td><td></td><td></td><td></td><td>○</td></tr><tr><td>02</td><td></td><td>○</td><td></td><td></td><td>11</td><td>○</td><td></td><td></td><td>○</td></tr><tr><td>03</td><td>○</td><td>○</td><td></td><td></td><td>12</td><td></td><td>○</td><td></td><td>○</td></tr><tr><td>08</td><td></td><td></td><td>○</td><td></td><td>13</td><td>○</td><td>○</td><td></td><td>○</td></tr><tr><td>09</td><td>○</td><td></td><td>○</td><td></td><td>18</td><td></td><td></td><td>○</td><td>○</td></tr><tr><td>0A</td><td></td><td>○</td><td>○</td><td></td><td>19</td><td>○</td><td></td><td>○</td><td>○</td></tr><tr><td>0B</td><td>○</td><td>○</td><td>○</td><td></td><td>1A</td><td></td><td>○</td><td>○</td><td>○</td></tr><tr><td></td><td></td><td></td><td></td><td></td><td>1B</td><td>○</td><td>○</td><td>○</td><td>○</td></tr></table>Circle (O): Faulty IPDU	L29	◎	○	◎	SIM	Error in number of IPDUs	There are insufficient number of IPDUs (P.C. boards) in inverter box.
L30	Detected indoor unit No.	(L30)	◎	○	◎	SIM	Indoor external error input (interlock)	Indoor unit has been shut down for external error input in one refrigerant line (detected by indoor unit).
P03	–	P03	◎	●	◎	ALT	Outdoor discharge (TD1) temperature error	Outdoor discharge temperature sensor (TD1) has detected abnormally high temperature.
P05	00: Open phase detected	P05	◎	●	◎	ALT	Open phase/power failure	Open phase is detected when power is turned on. Inverter DC voltage is too high (overvoltage) or too low (undervoltage).
	01: Compressor 1 02: Compressor 2						Inverter DC voltage (Vdc) error MG-CTT error	
P07	01: Compressor 1 02: Compressor 2	P07	◎	●	◎	ALT	Heat sink overheating error	Temperature sensor built into IPM (TH) detects overheating.
P10	Indoor unit No. detected	(P10)	●	◎	◎	ALT	Indoor unit overflow	Indoor unit has been shutdown in one refrigerant line due to detection of overflow (detected by indoor unit).
P13	–	P13	●	◎	◎	ALT	Outdoor liquid backflow detection error	State of refrigerant cycle circuit indicates liquid backflow operation.
P15	01: TS condition 02: TD condition	P15	◎	●	◎	ALT	Gas leak detection	Outdoor suction temperature sensor (TS1) detects sustained and repeated high temperatures that exceed standard value.
P17	–	P17	◎	●	◎	ALT	Outdoor discharge (TD2) temperature error	Outdoor discharge temperature sensor (TD2) detects abnormally high temperature.
P19	Outdoor unit No. detected	P19	◎	●	◎	ALT	4-way valve reversing error	Abnormality in refrigerating cycle is detected during heating operation.
P20	–	P20	◎	●	◎	ALT	Activation of high-pressure protection	High pressure (Pd) sensor detects high pressure that exceeds standard value.

MG-CTT: Magnet contactor

(Check code detected by IPDU featuring in SMMS-e standard outdoor unit - typical examples)

Check code			Display of receiving unit				Typical problem site	Description of proplem
Outdoor 7-segment display		TCC-LINK central control or main remote controller display	Indicator light block					
	Sub-code		Operation	Timer	Ready	Flash		
F13	01: Compressor 1 02: Compressor 2	F13	◎	◎	○	ALT	Error in temperature sensor built into indoor IPM (TH)	Temperature sensor built into indoor IPM (TH) has been open/short-circuited.
H01	01: Compressor 1 02: Compressor 2	H01	●	◎	●		Compressor breakdown	Inverter current (Idc) detection circuit detects overcurrent.
H02	01: Compressor 1 02: Compressor 2	H02	●	◎	●		Compressor error (lockup)	Compressor lockup is detected
H03	01: Compressor 1 02: Compressor 2	H03	●	◎	●		Current detection circuit error	Abnormal current is detected while inverter compressor is turned off.
P04	01: Compressor 1 02: Compressor 2	P04	◎	●	◎	ALT	Activation of high-pressure SW	High-pressure SW is activated.
P07	01: Compressor 1 02: Compressor 2	P07	◎	●	◎	ALT	Heat sink overheating error	Temperature sensor built into IPM (TH) detects overheating or has been short-circuited.
P22	#0:Element short circuit #1:Position detection circuit error #3:Motor lock error #4:Motor current error #C:TH Sensor temperature error #D:TH Sensor short circuit/release error #E:Vdc voltage error *Put in Fan IPDU No. in [#] mark	P22	◎	●	◎	ALT	Outdoor fan IPDU error	Outdoor fan IPDU detects error.
P26	01: Compressor 1 02: Compressor 2	P26	◎	●	◎	ALT	Activation of IPM short-circuit protection	Short-circuit protection for compressor motor driver circuit components is activated (momentary overcurrent).
P29	01: Compressor 1 02: Compressor 2	P29	◎	●	◎	ALT	Compressor position detection circuit error	Compressor motor position detection error is detected.

Note: The above check codes are examples only, and different check codes may be displayed depending on the outdoor unit configuration

8-3. Troubleshooting Based on Information Displayed on Remote Controller

Using main remote controller (RBC-AMT32E)

(1) Checking and testing

When a problem occurs to an air conditioner, a check code and indoor unit No. are displayed on the display window of the remote controller.
Check codes are only displayed while the air conditioner is in operation.
If the display has already disappeared, access check code history by following the procedure described below.

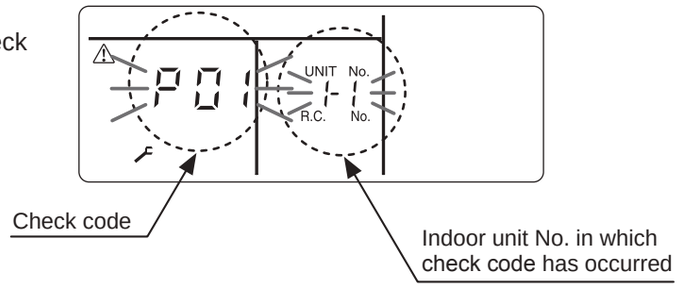

(2) Ckeck code history

The check code history access procedure is described below (up to four check code stored in memory).
Check code history can be accessed regardless of whether the air conditioner is in operation or shut down.

<Procedure> To be performed when system at rest

1 **Invoke the SERVICE CHECK mode by pressing the TEST + SET buttons simultaneously and holding for at least 4 seconds.**
The letters " SERVICE CHECK" light up, and the check code "01" is displayed, indicating the error history. This is accompanied by the indoor unit No. to which the check code history is related and a check code.

2 **To check other check code history items, press TEMP. button to select another check code.**
Check code "01" (latest) → Check code "04" (oldest)
Note: Check code history contains four items.

3 **When the TEST button is pushed, normal display is restored.**

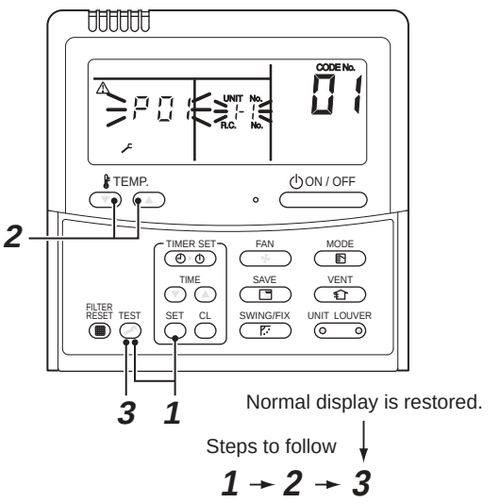

REQUIREMENT

Do not push the CL button as it would erase the whole check code history of the indoor unit.

How to read displayed information

<7-segment display symbols>

<Corresponding alphanumerical letters>

0 1 2 3 4 5 6 7 8 9 A b C d E F H J L P

Using TCC-LINK central remote controller (TCB-SC642TLE2)(1)

Checking and testing

When a problem occurs to an air conditioner, a check code and indoor unit No. are displayed on the display window of the remote controller. Check codes are only displayed while the air conditioner is in operation.

If the display has already disappeared, access check code history by following the procedure described below.

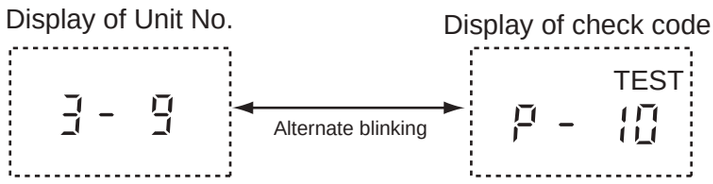

(2) Check code history

The check code history access procedure is described below (up to four check code stored in memory).

Check code history can be accessed regardless of whether the air conditioner is in operation or shut down.

1 **Push the TEST + SET buttons simultaneously and hold for at least 4 seconds.**

2 **The letters " SERVICE CHECK" light up, and the check code "01" is displayed.**

3 **When a group No. is selected (blinking), if there is an check code history, the UNIT No. and the latest check code history information are displayed alternately.**

*During this procedure, the temperature setting feature is unavailable.

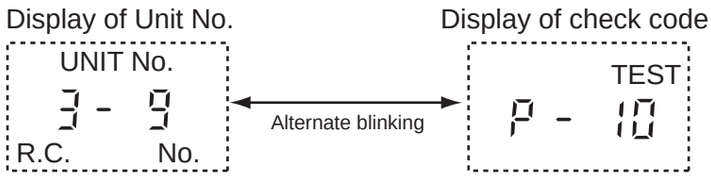

4 **To check other check code history items, push the TEMP. button to select another check code (01-04.).**

5 **To check check code relating to another group, push (ZONE) and (GROUP) ◁ ▷ buttons to select a group No.**
Do not push the CL button as it would erase the whole check code history of the selected group.

6 **To finish off the service check, push the TEST button.**

Using indoor unit indicators (receiving unit light block) (wireless type)

To identify the check code, check the 7-segment display on the header unit. To check for check codes not displayed on the 7-segment display, consult the “List of Check Codes (Indoor Unit)” in “8-2. Troubleshooting Method”.

●: Goes off ○: Lighting ☼: Blinking (0.5 seconds)

Light block	Check code	Cause of fault		
Operation ● Timer ● Ready ● All lights out	–	Power turned off or error in wiring between receiving and indoor units		
Operation ☼ Timer ● Ready ● Blinking	E01	Faulty reception	Receiving unit	Error or poor contact in wiring between receiving and indoor units
	E02	Faulty transmission		
	E03	Loss of communication		
	E08	Duplicated indoor unit No. (address)		Setting error
	E09	Duplicated master remote controller		
	E10	Indoor unit inter-MCU communication error		
	E12	Automatic address starting error		
	E18	Error or poor contact in wiring between indoor units, indoor power turned off		
Operation ● Timer ● Ready ☼ Blinking	E04	Error or poor contact in wiring between indoor and outdoor units (loss of indoor-outdoor communication)		
	E06	Faulty reception in indoor-outdoor communication (Signal lack of indoor unit)		
	E07	Faulty transmission in indoor-outdoor communication		
	E15	Indoor unit not found during automatic address setting		
	E16	Too many indoor units connected/overloading		
	E19	Error in number of outdoor header units		
	E20	Detection of refrigerant piping communication error during automatic address setting		
	E23	Faulty transmission in outdoor-outdoor communication		
	E25	Duplicated follower outdoor address		
	E26	Faulty reception in outdoor-outdoor communication, Signal lack of outdoor unit		
	E28	Outdoor follower unit error		
	E31	IPDU communication error, sub MCU communication error		
Operation ● Timer ☼ Ready ☼ Alternate blinking	P01	Indoor AC fan error		
	P10	Indoor overflow error		
	P12	Indoor DC fan error		
	P13	Outdoor liquid backflow detection error		
Operation ☼ Timer ● Ready ☼ Alternate blinking	P03	Outdoor discharge (TD1) temperature error		
	P04	Activation of outdoor high-pressure SW		
	P05	Open phase/power failure Inverter DC voltage (Vdc) error MG-CTT error		
	P07	Outdoor heat sink overheating error - Poor cooling of electrical component (IPM) of outdoor unit		
	P15	Gas leak detection - insufficient refrigerant charging		
	P17	Outdoor discharge (TD2) temperature error		
	P19	Outdoor 4-way valve reversing error		
	P20	Activation of high-pressure protection		
	P22	Outdoor fan IPDU error		
	P26	Outdoor IPM short-circuit error		
	P29	Compressor position detection circuit error		
	P31	Shutdown of other indoor unit in group due to fault (group follower unit error)		

MG-CTT: Magnet contactor

Light block	Check code	Cause of fault	
Operation Timer Ready Alternate blinking	F01	Heat exchanger temperature sensor (TCJ) error	Indoor unit temperature sensor errors
	F02	Heat exchanger temperature sensor (TC2) error	
	F03	Heat exchanger temperature sensor (TC1) error	
	F10	Ambient temperature sensor (TA/TSA) error	
	F11	Discharge temperature sensor (TF) error	
Operation Timer Ready Alternate blinking	F04	Discharge temperature sensor (TD1) error	Outdoor unit temperature sensor errors
	F05	Discharge temperature sensor (TD2) error	
	F06	Heat exchanger temperature sensor (TE1, TE2) error	
	F07	Liquid temperature sensor (TL1,TL2,TL3) error	
	F08	Outside air temperature sensor (TO) error	
	F12	Suction temperature sensor (TS1,TS3) error	
	F13	Heat sink sensor (TH) error	
	F15	Wiring error in heat exchanger sensor (TE1) and liquid temperature sensor (TL1) Outdoor unit temperature sensor wiring/installation error	
	F16	Wiring error in outdoor high pressure sensor (Pd) and low pressure sensor (Ps) Outdoor pressure sensor wiring error	
	F17	Outside air suction temperature sensor (TOA) error	
	F18	Indoor air suction temperature sensor (TRA) error	
	F23	Low pressure sensor (Ps) error	Outdoor unit pressure sensor errors
	F24	High pressure sensor (Pd) error	
Operation Timer Ready Synchronized blinking	F29	Fault in indoor EEPROM	
Operation Timer Ready Blinking	H01	Compressor breakdown	Outdoor unit compressor-related errors
	H02	Compressor lockup	
	H03	Current detection circuit error	
	H05	Wiring/installation error or detachment of outdoor discharge temperature sensor (TD1)	
	H06	Abnormal drop in low-pressure sensor (Ps) reading	Protective shutdown of outdoor unit
	H07	Abnormal drop in oil level	
	H08	Error in temperature sensor for oil level detection circuit (TK1, TK2, TK4 or TK5)	
	H15	Wiring/installation error or detachment of outdoor discharge temperature sensor (TD2)	
	H16	Oil level detection circuit error - Error in outdoor unit TK1, TK2, TK4 or TK5 circuit	
Operation Timer Ready Synchronized blinking	L02	Outdoor unit model unmatched error	
	L03	Duplicated indoor group header unit	
	L05	Duplicated priority indoor unit (as displayed on priority indoor unit)	
	L06	Duplicated priority indoor unit (as displayed on indoor unit other than priority indoor unit)	
	L07	Connection of group control cable to stand-alone indoor unit	
	L08	Indoor group address not set	
	L09	Indoor capacity not set	
Operation Timer Ready Synchronized blinking	L04	Duplicated outdoor refrigerant line address	
	L10	Outdoor capacity not set	
	L17	Outdoor model incompatibility error	
	L20	Duplicated central control address	
	L23	SW setting mistake	
	L28	Too many outdoor units connected	
	L29	Error in number of IPDUs	
	L30	Indoor external interlock error	

Light block	Check code	Cause of fault
Operation Timer Ready Synchronized blinking	F31	Outdoor EEPROM error

Other (indications not involving check code)

Light block	Check code	Cause of fault
Operation Timer Ready Synchronized blinking	–	Test run in progress
Operation Timer Ready Alternate blinking	–	Setting incompatibility (automatic cooling/heating setting for model incapable of it and heating setting for cooling-only model)

8-4. Check Codes Displayed on Remote Controller and SMMS-e Outdoor Unit (7-Segment Display on I/F Board) and Locations to Be Checked

For other types of outdoor units, refer to their own service manuals.

Check code			Location of detection	Description	System status	Error detection condition(s)	Check items (locations)
Main remote controller	Outdoor 7-segment display						
	Check code	Sub-code					
E01	–	–	Remote controller	Indoor-remote controller communication error (detected at remote controller end)	Stop of corresponding unit	Communication between indoor P.C. board and remote controller is disrupted.	• Check remote controller inter-unit tie cable (A/B). • Check for broken wire or connector bad contact. • Check indoor power supply. • Check for defect in indoor P.C. board. • Check remote controller address settings (when two remote controllers are in use). • Check remote controller P.C. board.
E02	–	–	Remote controller	Remote controller transmission error	Stop of corresponding unit	Signal cannot be transmitted from remote controller to indoor unit.	• Check internal transmission circuit of remote controller. --- Replace remote controller as necessary.
E03	–	–	Indoor unit	Indoor-remote controller communication error (detected at indoor end)	Stop of corresponding unit	There is no communication from remote controller (including wireless) or network adaptor.	• Check remote controller and network adaptor wiring.
E04	–	–	Indoor unit	Indoor-outdoor communication circuit error (detected at indoor end)	Stop of corresponding unit	Indoor unit is not receiving signal from outdoor unit.	• Check order in which power was turned on for indoor and outdoor units. • Check indoor address setting. • Check indoor-outdoor tie cable. • Check outdoor terminator resistor setting (SW30, Bit 2).
E04	E06	No. of indoor units from which signal is received normally	I/F	Dropping out of indoor unit	All stop	**Condition 1** All indoor unit initially communicating normally fails to return signal for specified length of time. **Condition 2** Outdoor I / F board SW09, Bit 4: OFF Factory default)	• Check power supply to indoor unit. (Is power turned on?) • Check connection of indoor-outdoor communication cable. • Check connection of communication connectors on indoor P.C. board. • Check connection of communication connectors on outdoor P.C. board. • Check for defect in indoor P.C. board. • Check for defect in outdoor P.C. board (I/F).
	–	–	Indoor unit	Indoor-outdoor communication circuit trouble	Only specified indoor units stop	**Condition 1** Indoor unit initially communicating normally fails to return signal for specified length of time.	• Check power supply to indoor unit. (Is power turned on?) • Check indoor-outdoor power-on sequence. • Check indoor address setting • Check wiring of Indoor-outdoor communication wires • Check outdoor terminator resistor setting (SW30, Bit 2).

Check code			Location of detection	Description	System status	Error detection condition(s)	Check items (locations)
Main remote controller	Outdoor 7-segment display						
	Check code	Sub-code					
E04/E06	E06	No. of indoor units from which signal is received normally	Indoor unit	Indoor-outdoor communication circuit trouble (E04)	All stop	**Condition 1** One indoor unit or more initially communicating normally fails to return signal for specified length of time. **Condition 2** Outdoor I / F board SW09, Bit 4: ON (To switch the check code detection condition.) SW09 ON 1 2 3 4 Display on main remote controller. Indoor units unavailable for indoor / outdoor communication. :E04 Indoor units available for indoor / outdoor communication. : E06	• Check power supply to indoor unit. (Is power turned on?) • Check indoor-outdoor power-on sequence. • Check indoor address setting • Check wiring of Indoor-outdoor communication wires • Check outdoor terminator resistor setting (SW30, Bit 2).
			I/F	Dropping out of indoor unit (E06)			• Check power supply to indoor unit. (Is power turned on?) • Check connection of indoor-outdoor communication cable. • Check connection of communication connectors on indoor P.C. board. • Check connection of communication connectors on outdoor P.C. board. • Check for defect in indoor P.C. board. • Check for defect in outdoor P.C. board (I/F).
–	E07	–	I/F	Indoor-outdoor communication circuit error (detected at outdoor end)	All stop	Signal cannot be transmitted from outdoor to indoor units for 30 seconds continuously.	• Check outdoor terminator resistor setting (SW30, Bit 2). • Check connection of indoor-outdoor communication circuit.
E08	E08	Duplicated indoor address	Indoor unit I/F	Duplicated indoor address	All stop	More than one indoor unit are assigned same address.	• Check indoor addresses. • Check for any change made to remote controller connection (group/ individual) since indoor address setting.
E09	–	–	Remote controller	Duplicated master remote controller	Stop of corresponding unit	In two remote controller configuration (including wireless), both controllers are set up as master. (Header indoor unit is shut down with alarm, while follower indoor units continue operating.)	• Check remote controller settings. • Check remote controller P.C. boards.
E10	–	–	Indoor unit	Indoor inter-MCU communication error	Stop of corresponding unit	Communication cannot be established/maintained upon turning on of power or during communication.	• Check for defect in indoor P.C. board
E12	E12	01: Indoor-outdoor communication 02: Outdoor-outdoor communication	I/F	Automatic address starting error	All stop	• Indoor automatic address setting is started while automatic address setting for equipment in other refrigerant line is in progress. • Outdoor automatic address setting is started while automatic address setting for indoor units is in progress.	• Perform automatic address setting again after disconnecting communication cable to that refrigerant line.

Check code			Location of detection	Description	System status	Error detection condition(s)	Check items (locations)
Main remote controller	Outdoor 7-segment display						
	Check code	Sub-code					
E15	E15	–	I/F	Indoor unit not found during automatic address setting	All stop	Indoor unit cannot be detected after indoor automatic address setting is started.	• Check connection of indoor-outdoor communication line. • Check for error in indoor power supply system. • Check for noise from other devices. • Check for power failure. • Check for defect in indoor P.C. board.
E16	E16	00: Overloading 01-: No. of units connected	I/F	Too many indoor units connected	All stop	• Combined capacity of indoor units is too large. **Note:** **If this code comes up after backup setting for outdoor unit failure is performed, perform "No overloading detected" setting.** <"No overloading detected" setting method> Turn on SW09/Bit 2 on I/F P.C. board of outdoor header unit. For Cooling Only model, this check code is not displayed even if it exceeds the combined capacity of indoor units. • More than 64 indoor units are connected.	• Check capacities of indoor units connected. • Check combined HP capacities of indoor units. • Check HP capacity settings of outdoor units. • Check No. of indoor units connected. • Check for defect in outdoor P.C. board (I/F).

Check code			Location of detection	Description	System status	Error detection condition(s)	Check items (locations)
Main remote controller	Outdoor 7-segment display						
	Check code	Sub-code					
E18	–	–	Indoor unit	Error in communication between indoor header and follower units	Stop of corresponding unit	Periodic communication between indoor header and follower units cannot be maintained.	• Check remote controller wiring. • Check indoor power supply wiring. • Check P.C. boards of indoor units.
E19	E19	00: No header unit 02: Two or more header units	I/F	Error in number of outdoor header units	All stop	• There are more than one outdoor header units in one line. • There is no outdoor header unit in one line.	Outdoor header unit is outdoor unit to which indoor-outdoor tie cable (U1,U2) is connected. • Check connection of indoor-outdoor communication line. • Check for defect in outdoor P.C. board (I/F).
E20	E20	01: Connection of outdoor unit from other line 02: Connection of indoor unit from other line	I/F	Connection to other line found during automatic address setting	All stop	Equipment from other line is found to have been connected when indoor automatic address setting is in progress.	Disconnect inter-line tie cable in accordance with automatic address setting method explained in “Address setting” section.
E23	E23	–	I/F	Outdoor-outdoor communication transmission error	All stop	Signal cannot be transmitted to other outdoor units for at least 30 seconds continuously.	• Check power supply to outdoor units. (Is power turned on?) • Check connection of tie cables between outdoor units for bad contact or broken wire. • Check communication connectors on outdoor P.C. boards. • Check for defect in outdoor P.C. board (I/F). • Check termination resistance setting for communication between outdoor units.
E25	E25	–	I/F	Duplicated follower outdoor address	All stop	There is duplication in outdoor addresses set manually.	**Note:** **Do not set outdoor addresses manually.**
E26	E26	Address of outdoor unit from which signal is not received normally	I/F	Signal lack of outdoor unit	All stop	Outdoor unit initially communicating normally fails to return signal for specified length of time.	• Backup setting is being used for outdoor units. • Check power supply to outdoor unit. (Is power turned on?) • Check connection of tie cables between outdoor units for bad contact or broken wire. • Check communication connectors on outdoor P.C. boards. • Check for defect in outdoor P.C. board (I/F).
E28	E28	Detected outdoor unit No.	I/F	Outdoor follower unit error	All stop	Outdoor header unit receives error code from outdoor follower unit.	• Check check code displayed on outdoor follower unit. <Convenient functions> If SW04 is pressed and held for at least 1 second while [E28] is displayed on the 7-segment display of outdoor header unit, the fan of the outdoor unit that has been shut down due to an error comes on. If SW04 and SW05 are pressed simultaneously, the fans of normal outdoor units come on. To stop the fan or fans, press SW05 on its own.

Check code			Location of detection	Description	System status	Error detection condition(s)	Check items (locations)
Main remote controller	Outdoor 7-segment display						
	Check code	Sub-code					
E31	E31	<table><tr><th></th><th colspan="2">A3-IPDU</th><th colspan="2">Fan-IPDU</th><th></th><th colspan="2">A3-IPDU</th><th colspan="2">Fan-IPDU</th></tr><tr><th></th><th>1</th><th>2</th><th>1</th><th>2</th><th></th><th>1</th><th>2</th><th>1</th><th>2</th></tr><tr><td>01</td><td>○</td><td></td><td></td><td></td><td>10</td><td></td><td></td><td></td><td>○</td></tr><tr><td>02</td><td></td><td>○</td><td></td><td></td><td>11</td><td>○</td><td></td><td></td><td>○</td></tr><tr><td>03</td><td>○</td><td>○</td><td></td><td></td><td>12</td><td></td><td>○</td><td></td><td>○</td></tr><tr><td>08</td><td></td><td></td><td>○</td><td></td><td>13</td><td>○</td><td>○</td><td></td><td>○</td></tr><tr><td>09</td><td>○</td><td></td><td>○</td><td></td><td>18</td><td></td><td></td><td>○</td><td>○</td></tr><tr><td>0A</td><td></td><td>○</td><td>○</td><td></td><td>19</td><td>○</td><td></td><td>○</td><td>○</td></tr><tr><td>0B</td><td>○</td><td>○</td><td>○</td><td></td><td>1A</td><td></td><td>○</td><td>○</td><td>○</td></tr><tr><td></td><td></td><td></td><td></td><td></td><td>1B</td><td>○</td><td>○</td><td>○</td><td>○</td></tr></table>Circle (O): Faulty IPDU	I/F	IPDU communication error	All stop	Communication is disrupted between IPDUs (P.C. boards) in inverter box.	• Check wiring and connectors involved in communication between IPDU-I/F P.C. board for bad contact or broken wire. • Check for defect in outdoor P.C. board (I/F, A3-IPDU or Fan IPDU). • Check for external noise.
		80		Communication error between MCU and Sub MCU	All stop	Communication between MCU and Sub MCU stopped.	• Operation of power supply reset (OFF for 60 seconds or more) • Outdoor I/F PC board error check
F01	–	–	Indoor unit	Indoor TCJ sensor error	Stop of corresponding unit	Sensor resistance is infinity or zero (open/short circuit).	• Check connection of TCJ sensor connector and wiring. • Check resistance characteristics of TCJ sensor. • Check for defect in indoor P.C. board.
F02	–	–	Indoor unit	Indoor TC2 sensor error	Stop of corresponding unit	Sensor resistance is infinity or zero (open/short circuit).	• Check connection of TC2 sensor connector and wiring. • Check resistance characteristics of TC2 sensor. • Check for defect in indoor P.C. board.
F03	–	–	Indoor unit	Indoor TC1 sensor error	Stop of corresponding unit	Sensor resistance is infinity or zero (open/short circuit).	• Check connection of TC1 sensor connector and wiring. • Check resistance characteristics of TC1 sensor. • Check for defect in indoor P.C. board.
F04	F04	–	I/F	TD1 sensor error	All stop	Sensor resistance is infinity or zero (open/short circuit).	• Check connection of TD1 sensor connector. • Check resistance characteristics of TD1 sensor. • Check for defect in outdoor P.C. board (I/F).
F05	F05	–	I/F	TD2 sensor error	All stop	Sensor resistance is infinity or zero (open/short circuit).	• Check connection of TD2 sensor connector. • Check resistance characteristics of TD2 sensor. • Check for defect in outdoor P.C. board (I/F).
F06	F06	01: TE1 sensor error 02: TE2 sensor error	I/F	TE1/TE2 sensor error	All stop	Sensor resistance is infinity or zero (open/short circuit).	• Check connection of TE1/TE2 sensor connectors. • Check resistance characteristics of TE1/TE2 sensors. • Check for defect in outdoor P.C. board (I/F).
F07	F07	01: TL1 sensor error 02: TL2 sensor error 03: TL3 sensor error	I/F	TL1/TL2/TL3 sensor error	All stop	Sensor resistance is infinity or zero (open/short circuit).	• Check connection of TL1/TL2/TL3 sensor connector. • Check resistance characteristics of TL1/TL2/TL3 sensor. • Check for defect in outdoor P.C. board (I/F).

Check code			Location of detection	Description	System status	Error detection condition(s)	Check items (locations)
Main remote controller	Outdoor 7-segment display						
	Check code	Sub-code					
F08	F08	–	I/F	TO sensor error	All stop	Sensor resistance is infinity or zero (open/short circuit).	• Check connection of TO sensor connector. • Check resistance characteristics of TO sensor. • Check for defect in outdoor P.C. board (I/F).
F09	F09	01: TG1 sersor error 02: TG2 sersor error	I/F	TG1/TG2 sensor error	All stop	Sensor resistance is infinity or zero (open/short circuit).	• Check connection of TG1/TG2 sensor connectors. • Check resistance characteristics of TG1/TG2 sensors. • Check for defect in outdoor P.C. board (I/F).
F10	–	–	Indoor unit	Indoor TA sensor error	Stop of corresponding unit	Sensor resistance is infinity or zero (open/short circuit).	• Check connection of TA sensor connector and wiring. • Check resistance characteristics of TA sensor. • Check for defect in indoor P.C. board.
F11	–	–	Indoor unit	Indoor TF sensor error	Stop of corresponding unit	Sensor resistance is infinity or zero (open/short circuit).	• Check connection of TF sensor connector and wiring. • Check resistance characteristics of TF sensor. • Check for defect in indoor P.C. board.
F12	F12	01: TS1 sersor error 03: TS3 sersor error	I/F	TS1/TS3 sensor error	All stop	Sensor resistance is infinity or zero (open/short circuit).	• Check connection of TS1/TS3 sensor connector • Check resistance characteristics of TS1/TS3 sensor. • Check for defect
F13	F13	01: Compressor 1 side 02: Compressor 2 side	IPDU	TH sensor error	All stop	Sensor resistance is infinity or zero (open/short circuit).	• Defect in IPM built-in temperature sensor → Replace A3-IPDU P.C. board.
F15	F15	–	I/F	Outdoor temperature sensor wiring error (TE1, TL1)	All stop	During compressor operation in HEAT mode, TL1 continuously provides temperature reading higher than indicated by TL1 by at least specified margin for 3 minutes or more.	• Check installation of TE1 and TL1 sensors. • Check resistance characteristics of TE1 and TL1 sensors. • Check for outdoor P.C. board (I/F) error.
F16	F16	–	I/F	Outdoor pressure sensor wiring error (Pd, Ps)	All stop	Readings of high-pressure Pd sensor and low-pressure Ps sensor are switched. Output voltages of both sensors are zero.	• Check connection of high-pressure Pd sensor connector. • Check connection of low-pressure Ps sensor connector. • Check for defect in pressure sensors Pd and Ps. • Check for error in outdoor P.C. board (I/F). • Check for deficiency in compressive output of compressor.
F23	F23	–	I/F	Ps sensor error	All stop	Output voltage of Ps sensor is zero.	• Check for connection error involving Ps sensor and Pd sensor connectors. • Check connection of Ps sensor connector. • Check for defect in Ps sensor. • Check for deficiency in compressive output of compressor. • Check for defect in 4-way valve. • Check for defect in outdoor P.C. board (I/F). • Check for defect in SV4 circuit.
F24	F24	–	I/F	Pd sensor error	All stop	Output voltage of Pd sensor is zero (sensor open-circuited). Pd > 4.15MPa despite compressor having been turned off.	• Check connection of Pd sensor connector. • Check for defect in Pd sensor. • Check for defect in outdoor P.C. board (I/F).

Check code			Location of detection	Description	System status	Error detection condition(s)	Check items (locations)
Main remote controller	Outdoor 7-segment display						
	Check code	Sub-code					
F29	–	–	Indoor unit	Other indoor error	Stop of corresponding unit	Indoor P.C. board does not operate normally.	• Check for defect in indoor P.C. board (faulty EEPROM)
F31	F31	–	I/F	Outdoor EEPROM error	All stop *1	Outdoor P.C. board (I/F) does not operate normally.	• Check power supply voltage. • Check power supply noise. • Check for defect in outdoor P.C. board (I/F).
H01	H01	01: Compressor 1 side 02: Compressor 2 side	IPDU	Compressor breakdown	All stop	Inverter current detection circuit detects overcurrent and shuts system down.	• Check power supply voltage. (AC380-415V ± 10%). • Check for defect in compressor. • Check for possible cause of abnormal overloading. • Check for defect in outdoor P.C. board (A3-IPDU).
H02	H02	01: Compressor 1 side 02: Compressor 2 side	IPDU	Compressor error (lockup) MG-CTT error	All stop	Overcurrent is detected several seconds after startup of inverter compressor.	• Check for defect in compressor. • Check power supply voltage. (AC380-415V ± 10%). • Check compressor system wiring, particularly for open phase. • Check connection of connectors/terminals on A3-IPDU P.C. board. • Check conductivity of case heater. (Check for refrigerant problem inside compressor.) • Check for defect in outdoor P.C. board (A3-IPDU). • Check outdoor MG-CTT.
H03	H03	01: Compressor 1 side 02: Compressor 2 side	IPDU	Current detection circuit error	All stop	Current flow of at least specified magnitude is detected despite inverter compressor having been shut turned off.	• Check current detection circuit wiring. • Check defect in outdoor P.C. board (A3-IPDU).
H05	H05	–	I/F	TD1 sensor miswiring (incomplete insertion)	All stop	Discharge temperature of compressor 1 (TD1) does not increase despite compressor being in operation.	• Check installation of TD1 sensor. • Check connection of TD1 sensor connector and wiring. • Check resistance characteristics of TD1 sensor. • Check for defect in outdoor P.C. board (I/F).
H06	H06	–	I/F	Activation of low-pressure protection	All stop	Low-pressure Ps sensor detects operating pressure lower than 0.02MPa.	• Check service valves to confirm full opening (both gas and liquid sides). • Check outdoor PMVs for clogging (PMV1, 3). • Check for defect in SV2 or SV4 circuits. • Check for defect in low-pressure Ps sensor. • Check indoor filter for clogging. • Check valve opening status of indoor PMV. • Check refrigerant piping for clogging. • Check operation of outdoor fan (during heating). • Check for insufficiency in refrigerant quantity.

MG-CTT: Magnet contactor

*1 Total shutdown in case of header unit
Continued operation in case of follower unit

Check code			Location of detection	Description	System status	Error detection condition(s)	Check items (locations)
Main remote controller	Outdoor 7-segment display						
	Check code	Sub-code					
H07	H07	–	I/F	Low oil level protection	All stop	Operating compressor detects continuous state of low oil level for about 2 hours.	<All outdoor units in corresponding line to be checked> • Check balance pipe service valve to confirm full opening. • Check connection and installation of TK1, TK2, TK4, and TK5 sensors. • Check resistance characteristics of TK1, TK2, TK4, and TK5 sensors. • Check for gas or oil leak in same line. • Check for refrigerant problem inside compressor casing. • Check SV3A, SV3B, SV3C, SV3D valves for defect. • Check oil return circuit of oil separator for clogging. • Check oil equalizing circuit for clogging.
H08	H08	01: TK1 sensor error 02: TK2 sensor error 04: TK4 sensor error 05: TK5 sensor error	I/F	Error in temperature sensor for oil level detection	All stop	Sensor resistance is infinity or zero (open/short circuit).	• Check connection of TK1 sensor connector. • Check resistance characteristics of TK1 sensor. • Check for defect in outdoor P.C. board (I/F).
					All stop	Sensor resistance is infinity or zero (open/short circuit).	• Check connection of TK2 sensor connector. • Check resistance characteristics of TK2 sensor. • Check for defect in outdoor P.C. board (I/F).
					All stop	Sensor resistance is infinity or zero (open/short circuit).	• Check connection of TK4 sensor connector. • Check resistance characteristics of TK4 sensor. • Check for defect in outdoor P.C. board (I/F).
					All stop	Sensor resistance is infinity or zero (open/short circuit).	• Check connection of TK5 sensor connector. • Check resistance characteristics of TK5 sensor. • Check for defect in outdoor P.C. board (I/F).
H15	H15	–	I/F	TD2 sensor miswiring (incomplete insertion)	All stop	Discharge temperature of (TD2) does not increase despite compressor 2 being in operation.	• Check installation of TD2 sensor. • Check connection of TD2 sensor connector and wiring. • Check resistance characteristics of TD2 sensor. • Check for defect in outdoor P.C. board (I/F).

Check code			Location of detection	Description	System status	Error detection condition(s)	Check items (locations)
Main remote controller	Outdoor 7-segment display						
	Check code	Sub-code					
H16	H16	01: TK1 oil circuit error 02: TK2 oil circuit error 04: TK4 oil circuit error 05: TK5 oil circuit error	I/F	Oil level detection circuit error	All stop	No temperature change is detected by TK1 despite compressor 1 having been started.	• Check for disconnection of TK1 • sensor. Check resistance characteristics of TK1 sensor. • Check for connection error involving TK1, TK2, , TK4, and TK5 sensors • Check for clogging in oil equalizing circuit capillary and faulty operation in check valve. • Check for refrigerant entrapment inside compressor.
						No temperature change is detected by TK2 despite compressor 2 having been started.	• Check for disconnection of TK2 • sensor. Check resistance characteristics of TK2 sensor. • Check for connection error involving TK1, TK2, , TK4, and TK5 sensors • Check for clogging in oil equalizing circuit capillary and faulty operation in check valve. • Check for refrigerant entrapment inside compressor.
						No temperature change is detected by TK4 despite compressor having been started.	• Check for disconnection of TK4 • sensor. Check resistance characteristics of TK4 sensor. • Check for connection error involving TK1, TK2, , TK4, and TK5 sensors • Check for clogging in oil equalizing circuit capillary and faulty operation in check valve. • Check for refrigerant entrapment inside compressor.
						No temperature change is detected by TK5 despite compressor having been started.	• Check for disconnection of TK5 • sensor. Check resistance characteristics of TK5 sensor. • Check for connection error involving TK1, TK2, , TK4, and TK5 sensors • Check for clogging in oil equalizing circuit capillary and faulty operation in check valve. • Check for refrigerant entrapment inside compressor.

Check code			Location of detection	Description	System status	Error detection condition(s)	Check items (locations)
Main remote controller	Outdoor 7-segment display						
	Check code	Sub-code					
L02	L02	–	Indoor unit	Outdoor units model disagreement error	Stop of corresponding unit	In case of different outdoor unit (Not corresponded to Air to Air Heat Exchanger type)	• Check outdoor unit model. (Check whether the outdoor unit corresponds to Air to Air Heat Exchanger type or not.)
L03	–	–	Indoor unit	Duplicated indoor header unit	Stop of corresponding unit	There are more than one header units in group.	• Check indoor addresses. • Check for any change made to remote controller connection (group/ individual) since indoor address setting.
L04	L04	–	I/F	Duplicated outdoor line address	All stop	There is duplication in line address setting for outdoor units belonging to different refrigerant piping systems.	• Check line addresses.
L05	–	–	I/F	Duplicated priority indoor unit (as displayed on priority indoor unit)	All stop	More than one indoor units have been set up as priority indoor unit.	• Check display on priority indoor unit.
L06	L06	No. of priority indoor units	I/F	Duplicated priority indoor unit (as displayed on indoor unit other than priority indoor unit)	All stop	More than one indoor units have been set up as priority indoor unit.	• Check displays on priority indoor unit and outdoor unit.
L07	–	–	Indoor unit	Connection of group control cable to stand-alone indoor unit	Stop of corresponding unit	There is at least one stand-alone indoor unit to which group control cable is connected.	• Check indoor addresses.
L08	L08	–	Indoor unit	Indoor group / addresses not set	Stop of corresponding unit	Address setting has not been performed for indoor units.	• Check indoor addresses. **Note:** **This code is displayed when power is turned on for the first time after installation.**
L09	–	–	Indoor unit	Indoor capacity not set	Stop of corresponding unit	Capacity setting has not been performed for indoor unit.	Set indoor capacity. (DN = 11)
L10	L10	–	I/F	Outdoor capacity not set	All stop	Jumper wire provided on P.C. board for servicing I/F P.C. board has not been removed as required for given model.	Check model setting of P.C. board for servicing outdoor I/F P.C. board.
L20	–	–	Network adaptor Indoor unit	Duplicated central control address	All stop	There is duplication in central control address setting.	• Check central control addresses. • Check network adaptor P.C. board .
L23	–	–	I/F	SW setting mistake	All stop	Outdoor P.C. board (I/F) does not operate normally.	• Check switch setting of Bit 3 and 4 of SW17 in outdoor P.C. board (I/F).
L28	L28	–	I/F	Too many outdoor units connected	All stop	There are more than three outdoor units.	• Check No. of outdoor units connected (Only up to 3 units per system allowed). • Check communication lines between outdoor units. • Check for defect in outdoor P.C. board (I/F).

<table>
<tr><th colspan="2">Check code</th><th rowspan="3">Location of detection</th><th rowspan="3">Description</th><th rowspan="3">System status</th><th rowspan="3">Error detection condition(s)</th><th rowspan="3">Check items (locations)</th></tr>
<tr><th rowspan="2">Main remote controller</th><th colspan="2">Outdoor 7-segment display</th></tr>
<tr><th>Check code</th><th>Sub-code</th></tr>
<tr><td>L29</td><td>L29</td><td>
<table>
<tr><th></th><th colspan="2">A3-IPDU</th><th colspan="2">Fan-IPDU</th><th></th><th colspan="2">A3-IPDU</th><th colspan="2">Fan-IPDU</th></tr>
<tr><th></th><th>1</th><th>2</th><th>1</th><th>2</th><th></th><th>1</th><th>2</th><th>1</th><th>2</th></tr>
<tr><td>01</td><td>o</td><td></td><td></td><td></td><td>10</td><td></td><td></td><td></td><td>o</td></tr>
<tr><td>02</td><td></td><td>o</td><td></td><td></td><td>11</td><td>o</td><td></td><td></td><td>o</td></tr>
<tr><td>03</td><td>o</td><td>o</td><td></td><td></td><td>12</td><td></td><td>o</td><td></td><td>o</td></tr>
<tr><td>08</td><td></td><td></td><td>o</td><td></td><td>13</td><td>o</td><td>o</td><td></td><td>o</td></tr>
<tr><td>09</td><td>o</td><td></td><td>o</td><td></td><td>18</td><td></td><td></td><td>o</td><td>o</td></tr>
<tr><td>0A</td><td></td><td>o</td><td>o</td><td></td><td>19</td><td>o</td><td></td><td>o</td><td>o</td></tr>
<tr><td>0B</td><td>o</td><td>o</td><td>o</td><td></td><td>1A</td><td></td><td>o</td><td>o</td><td>o</td></tr>
<tr><td></td><td></td><td></td><td></td><td></td><td>1B</td><td>o</td><td>o</td><td>o</td><td>o</td></tr>
</table>
Circle (O): Faulty IPDU
</td><td>I/F</td><td>Error in No. of IPDUs</td><td>All stop</td><td>Insufficient number of IPDUs are detected when power is turned on.</td><td>• Check model setting of P.C. board for servicing outdoor I/F P.C. board.
• Check connection of UART communication connector.
• Check A3-IPDU, fan IPDU, and I/F P.C. board for defect.</td></tr>
<tr><td>L30</td><td>L30</td><td>Detected indoor address</td><td>Indoor unit</td><td>External interlock of indoor unit</td><td>Stop of corresponding unit</td><td>• Signal is present at external error input terminal (CN80) for 1 minute.</td><td>When external device is connected to CN80 connector:
1) Check for defect in external device.
2) Check for defect in indoor P.C. board.
When external device is not connected to CN80 connector:
1) Check for defect in indoor P.C. board.</td></tr>
<tr><td>–</td><td>L31</td><td>–</td><td>I/F</td><td>Extended IC error</td><td>Continued operation</td><td>There is part failure in P.C. board (I/F).</td><td>Check outdoor P.C. board (I/F).</td></tr>
<tr><td>P01</td><td>–</td><td>–</td><td>Indoor unit</td><td>Indoor fan motor error</td><td>Stop of corresponding unit</td><td></td><td>• Check the lock of fan motor (AC fan).
• Check wiring.</td></tr>
<tr><td>P03</td><td>P03</td><td>–</td><td>I/F</td><td>Discharge temperature TD1 error</td><td>All stop</td><td>Discharge temperature (TD1) exceeds 115°C.</td><td>• Check outdoor service valves (gas side, liquid side) to confirm full opening.
• Check outdoor PMVs (PMV1, 3) for clogging.
• Check resistance characteristics of TD1 sensor.
• Check for insufficiency in refrigerant quantity.
• Check for defect in 4-way valve.
• Check for leakage of SV4 circuit.
• Check SV4 circuit (wiring or installation error in SV41 or SV42).</td></tr>
</table>

Check code			Location of detection	Description	System status	Error detection condition(s)	Check items (locations)
Main remote controller	Outdoor 7-segment display						
	Check code	Sub-code					
P04	P04	01: Compressor 1 side 02: Compressor 2 side	IPDU	Activation of high-pressure SW	All stop	High-pressure SW is activated.	• Check connection of high-pressure SW connector. • Check for defect in Pd pressure sensor. • Check outdoor service valves (gas side, liquid side) to confirm full opening. • Check for defect in outdoor fan. • Check for defect in outdoor fan motor. • Check outdoor PMVs (PMV1, 3) for clogging. • Check indoor/outdoor heat exchangers for clogging. • Check for short-circuiting of outdoor suction/discharge air flows. • Check SV2 circuit for clogging. • Check for defect in outdoor P.C. board (I/F). • Check for error in indoor fan system (possible cause of air flow reduction). • Check opening status of indoor PMV. • Check indoor-outdoor communication line for wiring error. • Check for faulty operation of check valve in discharge pipe convergent section. • Check gas balancing SV4 valve circuit. • Check SV5 valve circuit. • Check for refrigerant overcharging.
P05	P05	00:	I/F	Detection of open phase/phase sequence	All stop	• Open phase is detected when power is turned on. • Inverter DC voltage is too high (overvoltage) or too low (undervoltage).	• Check for defect in outdoor P.C. board (I/F). • Check wiring of outdoor power supply.
		01: Compressor 1 side 02: Compressor 2 side		Inverter DC voltage (Vdc) error (compressor) MG-CTT error			
P07	P07	01: Compressor 1 side 02: Compressor 2 side	IPDU I/F	Heat sink overheating error	All stop	Temperature sensor built into IPM (TH) is overheated.	• Check power supply voltage. • Check outdoor fan system error. • Check heat sink cooling duct for clogging. • Check IPM and heat sink for thermal performance for faulty installation. (e.g. mounting screws and thermal conductivity) • Check for defect in A3-IPDU. (faulty IPM built-in temperature sensor (TH))
P10	P10	Detected indoor address	Indoor unit	Indoor overflow error	All stop	• Float switch operates. • Float switch circuit is open-circuited or disconnected at connector.	• Check float switch connector. • Check operation of drain pump. • Check drain pump circuit. • Check drain pipe for clogging. • Check for defect in indoor P.C. board.
P12	–	–	Indoor unit	Indoor fan motor error	Stop of corresponding unit	• Motor speed measurements continuously deviate from target value. • Overcurrent protection is activated.	• Check connection of fan connector and wiring. • Check for defect in fan motor. • Check for defect in indoor P.C. board. • Check impact of outside air treatment (OA).

MG-CTT: Magnet contactor

Check code			Location of detection	Description	System status	Error detection condition(s)	Check items (locations)
Main remote controller	Outdoor 7-segment display						
	Check code	Sub-code					
P13	P13	–	I/F	Outdoor liquid backflow detection error	All stop	<During cooling operation> When system is in cooling operation, high pressure is detected in follower unit that has been turned off. <During heating operation> When system is in heating operation, outdoor PMV 1 or 3 continuously registers opening of 300p or less while under superheat control.	• Check full-close operation of outdoor PMV (1, 3, 4). • Check for defect in Pd or Ps sensor. • Check gas balancing circuit (SV2) for clogging. • Check balance pipe. • Check SV3B circuit for clogging. • Check defect in outdoor P.C. board (I/F). • Check capillary of oil separator oil return circuit for clogging. • Check for leakage of check valve in discharge pipe convergent section.
P15	P15	01: TS condition	I/F	Gas leakdetection (TS1 condition)	All stop	Protective shutdown due to sustained suction temperature at or above judgment criterion for at least 10 minutes is repeated four times or more. <TS error judgment criterion> In cooling operation: 60°C In heating operation: 40°C	• Check for insufficiency in refrigerant quantity. • Check outdoor service valves (gas side, liquid side) to confirm full opening. • Check PMVs (PMV1, 3) for clogging. • Check resistance characteristics of TS1 sensor. • Check for defect in 4-way valve. • Check SV4 circuit for leakage
		02: TD condition	I/F	Gas leak detection (TD condition)	All stop	Protective shutdown due to sustained discharge temperature (TD1 or TD2) at or above 108 °C for at least 10 minutes is repeated four times or more.	• Check for insufficiency in refrigerant quantity. • Check PMVs (PMV 1, 3) for clogging. • Check resistance characteristics of TD1 and TD2 sensors. • Check indoor filter for clogging. • Check piping for clogging. • Check SV4 circuit (for leakage or coil installation error).
P17	P17	–	I/F	Discharge temperature TD2 error	All stop	Discharge temperature (TD2) exceeds 115°C.	• Check outdoor service valves (gas side, liquid side) to confirm full opening. • Check outdoor PMVs (PMV1, 3, 4) for clogging. • Check resistance characteristics of TD2 sensor. • Check for defect in 4-way valve. • Check SV4 circuit for leakage. • Check SV4 circuit (for wiring or installation error involving SV41 and SV42).

Check code			Location of detection	Description	System status	Error detection condition(s)	Check items (locations)
Main remote controller	Outdoor 7-segment display						
	Check code	Sub-code					
P19	P19	Detected outdoor unit No.	I/F	4-way valve reversing error	All stop	Abnormal refrigerating cycle data is collected during heating operation.	• Check for defect in main body of 4-way valve. • Check for coil defect in 4-way valve and loose connection of its connector. • Check resistance characteristics of TS1 and TE1,TE2 sensors. • Check output voltage characteristics of Pd and Ps pressure sensors. • Check for wiring error involving TE1 and TL1 sensors.
P20	P20	–	I/F	Activation of high-pressure protection	All stop	<During cooling operation> Pd sensor detects pressure equal to or greater than 3.85 MPa. <During heating operation> Pd sensor detects pressure equal to or greater than 3.6 MPa.	• Check for defect in Pd pressure sensor. • Check service valves (gas side, liquid side) to confirm full opening. • Check for defect in outdoor fan. • Check for defect in outdoor fan motor. • Check outdoor PMV (PMV1, 3, 4) for clogging. • Check indoor/outdoor heat exchangers for clogging. • Check for short-circuiting of outdoor suction/ discharge air flows. • Check SV2 circuit for clogging. • Check for defect in outdoor P.C. board (I/F). • Check for defect in indoor fan system (possible cause of air flow reduction). • Check opening status of indoor PMV. • Check indoor-outdoor communication line for wiring error. • Check for faulty operation of check valve in discharge pipe convergent section. • Check gas balancing SV4 valve circuit. • Check SV5 valve circuit. • Check for refrigerant overcharging.

Check code			Location of detection	Description	System status	Error detection condition(s)	Check items (locations)
Main remote controller	Outdoor 7-segment display						
	Check code	Sub-code					
P22	P22	#0:Element short circuit	IPDU	Outdoor fan IPDU error *Put in Fan IPDU No. in [#] mark	All stop	(Sub code: #0) Fan IPDU over current protection circuit Flow of current equal to or greater than the specified value is detected during startup of the fan.	• Check fan motor. • Check for defect in fan IPDU P.C. board.
		#1:Position detection circuit error			All stop	(Sub code: #1) Fan IPDU position detection circuit Position detection is not going on normally.	• Check fan motor. • Check connection of fan motor connector. • Check for defect in fan IPDU P.C. board.
		#3:Motor lock error			All stop	(Sub code: #3) Gusty wind, an obstruction, or another external factor Speed estimation is not going on normally.	• Check fan motor. • Check for defect in fan IPDU P.C. board.
		#4:Motor current error			All stop	(Sub code: #4) Fan IPDU over current protection circuit Flow of current equal to or greater than the specified value is detected during operation of the fan.	• Check fan motor. • Check connection of fan motor connector. • Check for defect in fan IPDU P.C. board.
		#C:TH sensor temperature error			All stop	(Sub code: #C) Higher temperature than the specified value is detected during operation of the fan.	• Check fan motor. • Check for defect in fan IPDU P.C. board.
		#D:TH sensor short circuit/release error			All stop	(Sub code: #D) The resistance value of the sensor is infinite or zero (open or short circuit).	• Check for defect in fan IPDU P.C. board.
		#E:Vdc voltage error			All stop	(Sub code: #E) Fan IPDU DC voltage protection circuit The DC voltage higher or lower than the specified value is detected.	• Check power voltage of the main power supply. • Check for defect in fan IPDU P.C. board. • Check connection of fan IPDU P.C. board.
P26	P26	01: Compressor 1 side 02: Compressor 2 side	IPDU	IPM short-circuit protection error	All stop	Overcurrent is momentarily detected during startup of compressor.	• Check connector connection and wiring on A3-IPDU P.C. board. • Check for defect in compressor (layer short-circuit). • Check for defect in outdoor P.C. board (A3-IPDU).
P29	P29	01: Compressor 1 side 02: Compressor 2 side	IPDU	Compressor position detection circuit error	All stop	Position detection is not going on normally.	• Check wiring and connector connection. • Check for compressor layer short-circuit. • Check for defect in A3-IPDU P.C. board.
P31	–	–	Indoor unit	Other indoor error (group follower unit error)	Stop of corresponding unit	There is error in other indoor unit in group, resulting in detection of E07/L07/L03/L08.	• Check indoor P.C. board.

Check codes Detected by TCC-LINK Central Control Device

Check code			Location of detection	Description	System status	Error detection condition(s)	Check items (locations)
Main remote controller	Outdoor 7-segment display	Sub-code					
C05	–		TCC-LINK	TCC-LINK central control device transmission error	Continued operation	Central control device is unable to transmit signal.	• Check for defect in central control device. • Check for defect in central control communication line. • Check termination resistance setting.
C06	–			TCC-LINK central control device reception error	Continued operation	Central control device is unable to receive signal.	• Check for defect in central control device. • Check for defect in central control communication line. • Check terminator resistor setting. • Check power supply for devices at other end of central control communication line. • Check defect in P.C. boards of devices at other end of central control communication line.
C12	–		General-purpose device I/F	Batch alarm for general-purpose device control interface	Continued operation	Error signal is input to control interface for general-purpose devices.	• Check error input.
P30	Differs according to nature of alarm-causing error		TCC-LINK	Group control follower unit error	Continued operation	Error occurs in follower unit under group control. ([P30] is displayed on central control remote controller.)	• Check check code of unit that has generated alarm.
	(L20 displayed.)			Duplicated central control address	Continued operation	There is duplication in central control addresses.	• Check address settings.

▼ Points to Note When Servicing Compressor

(1) When checking the outputs of inverters, remove the wiring from all the compressors.

▼ How to Check Inverter Output

(1) Turn off the power supply.

(2) Remove compressor leads from the IPDU P.C. board (A3-IPDU). (Be sure to remove all the leads.)

(3) Turn on the power supply and start cooling or heating operation.
Be careful not to make simultaneous contact with two or more faston connectors for compressor leads or a faston connector and some other object (e.g. the unit cabinet).

(4) Check the output voltage across each pair of inverter-side (CN201, 202, 203).
If the result is unsatisfactory according to the judgment criteria given in the table below, replace the IPDU P.C. board.

No.	Measured leads	Criterion
1	Red-White	380~580V
2	White-Black	380~580V
3	Black-Red	380~580V

* When connecting the compressor leads back to the compressor terminals after checking the output, check the faston connectors thoroughly to ensure that they are not crooked. If there is any loose connector, tighten it with a pair of pliers, etc. before connecting the lead.

▼ How to Check Resistance of Compressor Winding

(1) Turn off the power supply.

(2) Remove compressor leads from the compressors.

(3) With each compressor, check the phase-to-phase winding resistances and winding-to-outdoor cabinet resistance using a multimeter.

- Earth fault?
  → It is normal if the winding-to-outdoor cabinet resistance is 10MΩ or more.
- Inter-winding short circuit?
  →It is normal if the phase-to-phase resistances are in the 0.1-1.0Ω range. (Use a digital multimeter.)

▼ How to Check Outdoor Fan Motor

(1) Turn off the power supply.

(2) Remove fan motor leads from the IPDU P.C. board for the outdoor fan (CN301-CN303).

(3) Rotate the fan by hand. If the fan does not turn, the fan motor is faulty (locked up). Replace the fan motor.
If the fan turns, measure the phase-to-phase winding resistances using a multimeter. It is normal if the measurements are in the 8.1-9.9Ω range. (Use a digital multimeter.)

8-5. Diagnosis procedure for each check code

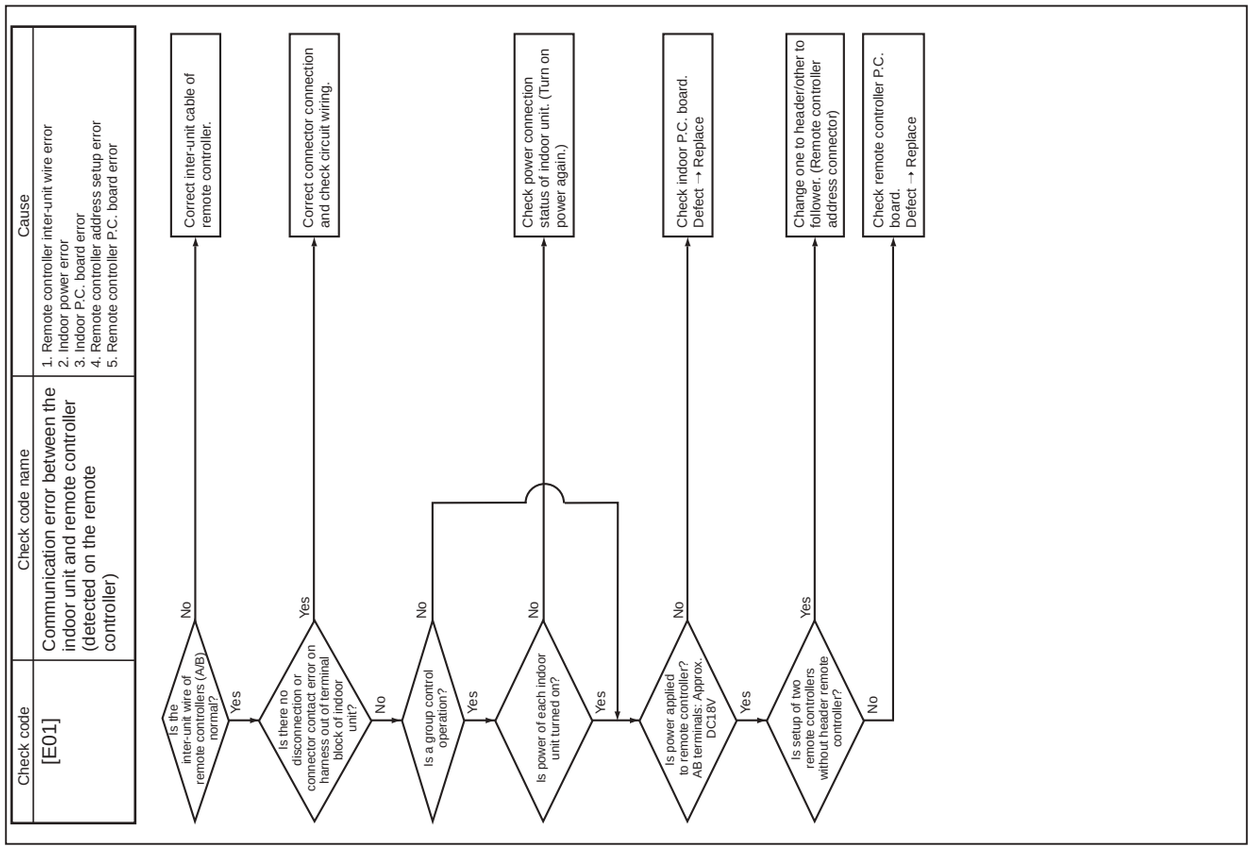

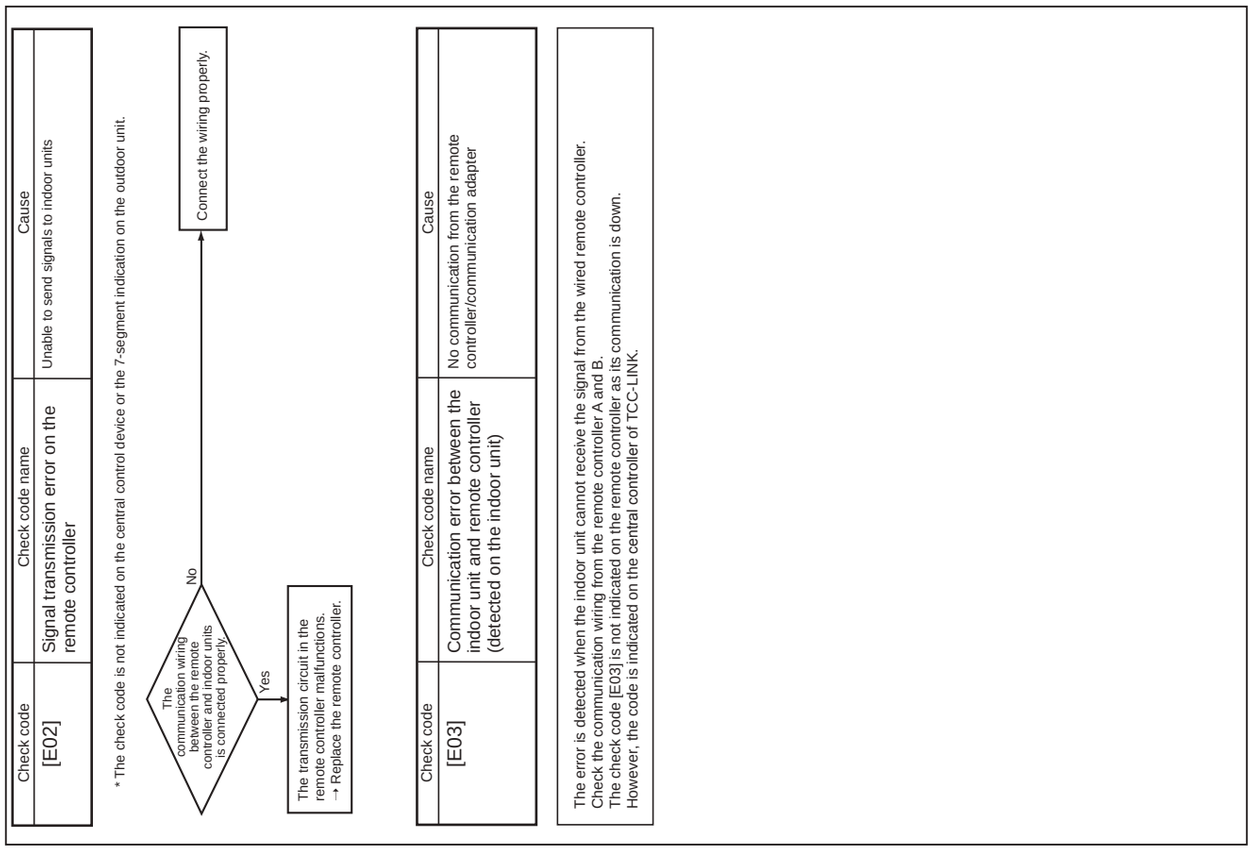

Check code	Check code name	Cause
[E06]	Decreased number of indoor units	1. Communication lines (U1, U2) connection error between indoor and outdoor 2. Communication connector's connection error on indoor unit, error on P.C. board 3. Communication connector's connection error on outdoor unit, error on I/F board 4. Power supply of indoor unit (Is power turned on?)

Sub-code: No. of indoor units which received signals normally

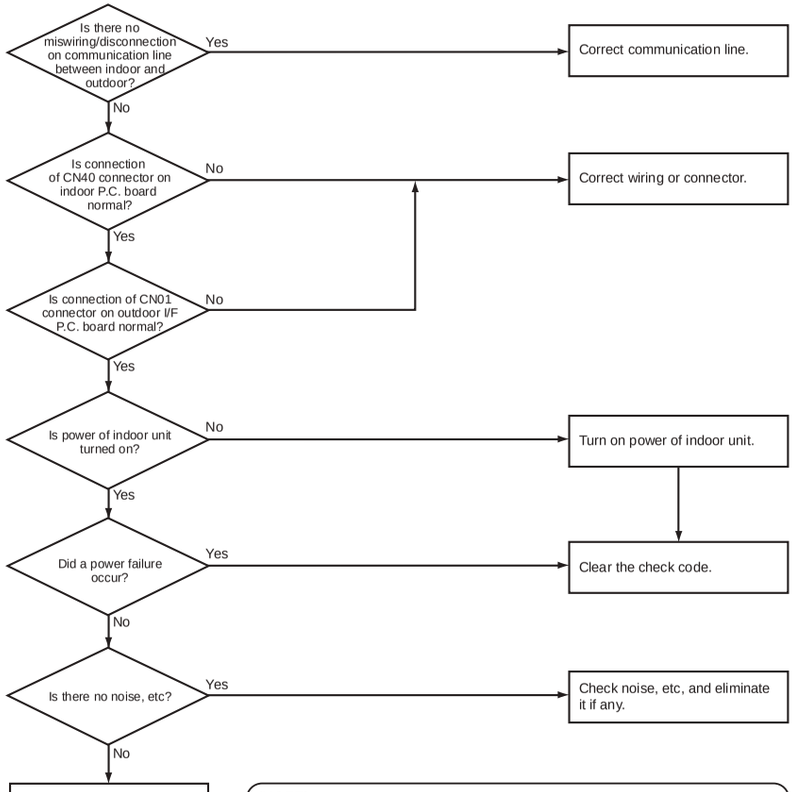

(NOTE)
1. When signal is not sent for a certain period from the indoor unit which has used to send signals normally, [E06] is displayed.

Check code	Check code name	Cause
[E04]	Indoor/Outdoor communication circuit error (Detected at indoor side)	1. Power of outdoor unit was firstly turned on. 2. Connection error of communication line between indoor and outdoor 3. Terminator resistor setup error on communication between indoor and outdoor 4. Address setup error

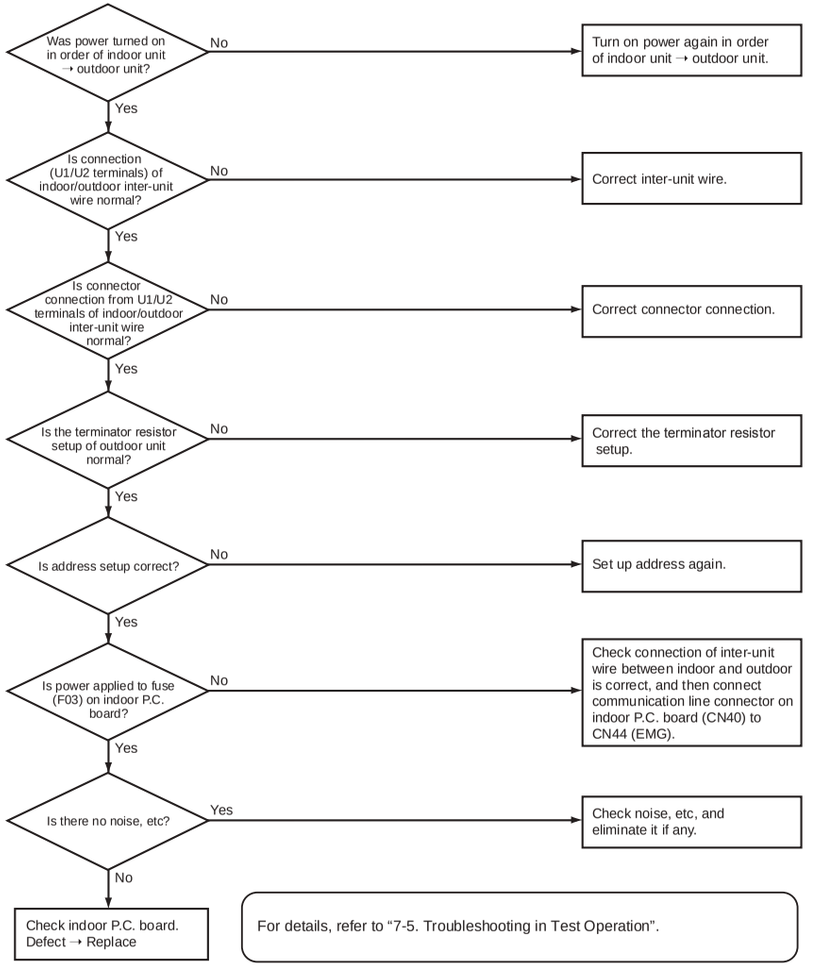

For details, refer to "7-5. Troubleshooting in Test Operation".

Check code	Check code name	Cause
[E08]	Duplicated indoor addresses	Indoor addresses are duplicated.

Sub-code: Duplicated indoor address

Using a wired remote controller (RBC-AMT32E), check the setup CODE No. (DN code) 12, 13, and 14.
When there is no address duplication, check to the following flowchart.

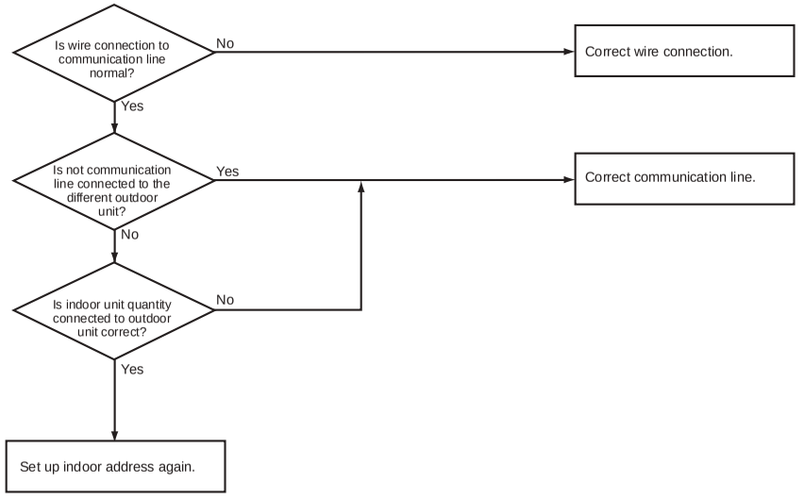

Check code	Check code name	Cause
[E07]	Indoor/Outdoor communication circuit error (Detected at outdoor side)	1. Indoor/outdoor communication terminator resistor setup error 2. Indoor/outdoor communication connection error

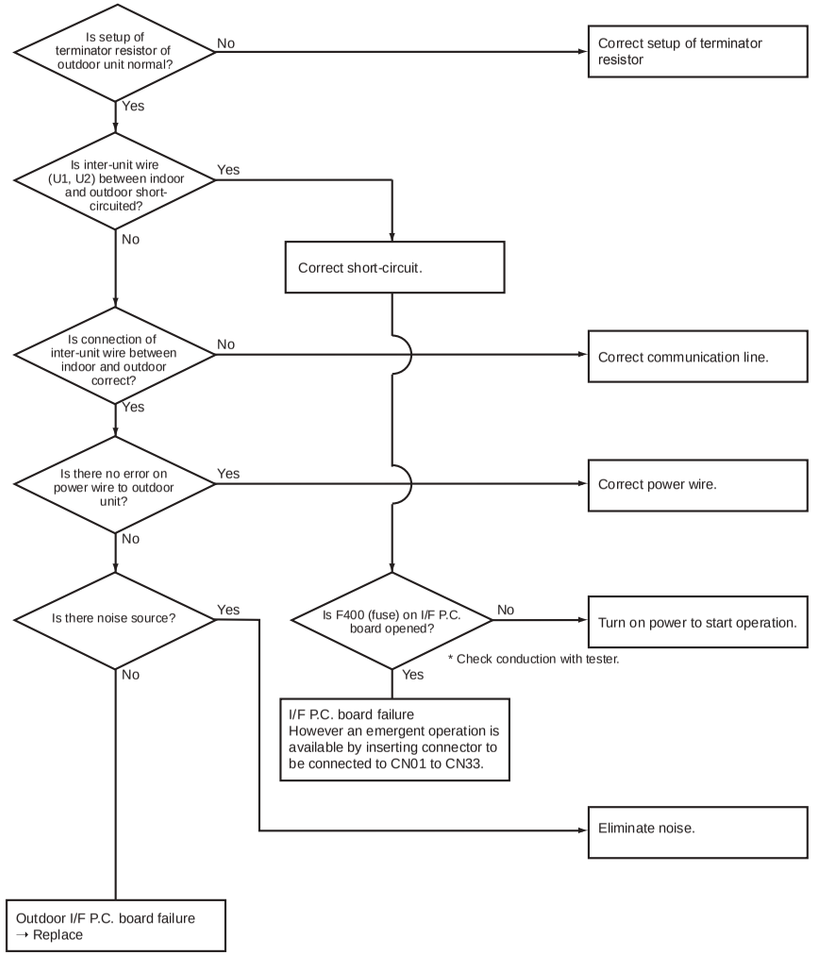

Check code	Check code name	Cause
[E15]	No corresponding indoor unit during automatic address	1. Communication line connection error between indoor and outdoor 2. Indoor power system error 3. Noise from surrounding devices 4. Power failure 5. Indoor P.C. board error

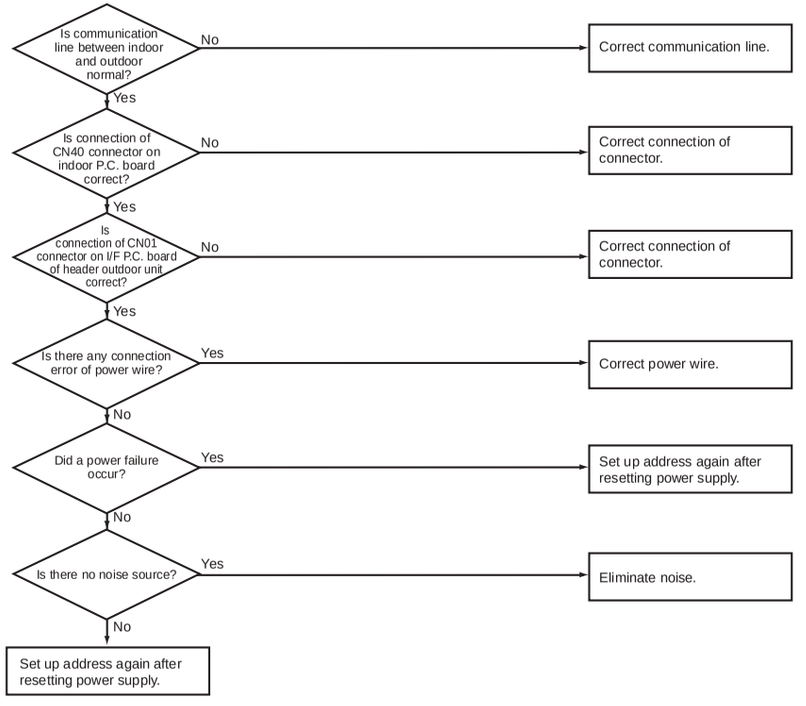

Check code	Check code name	Cause
[E09]	Duplicated header remote controller	Setup of header remote controller is duplicated.

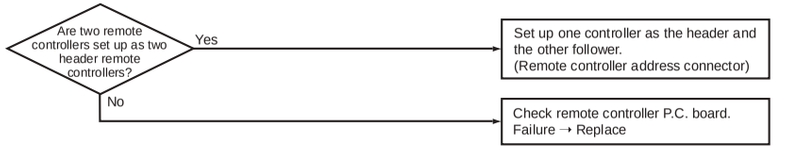

Check code	Check code name	Cause
[E10]	Communication error between indoor MCUs.	Indoor P.C. board error.

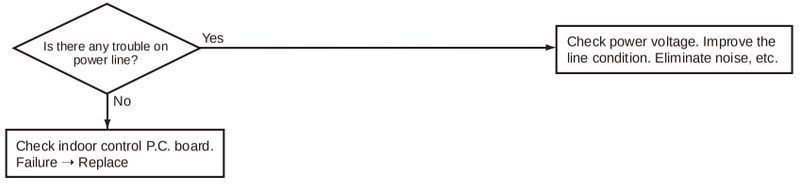

Check code	Check code name	Cause
[E12]	Automatic address start error	1. Starting automatic addressing of indoor units during automatic addressing in another refrigerant line. (Sub-code: 01) 2. Starting automatic addressing of outdoor units during automatic addressing of indoor units (Sub-code: 02)

Sub-code: 01: Communication between indoor and outdoor 02: Communication between outdoor units

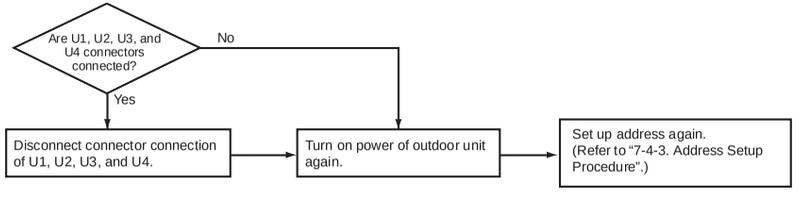

Check code	Check code name	Cause
[E18]	Communication error between indoor header and follower	Regular communication between indoor header and follower is unavailable.

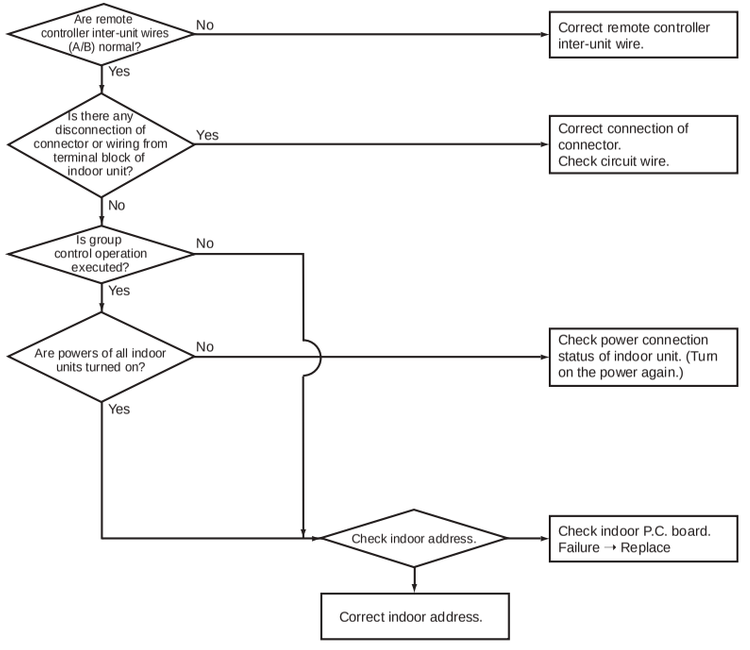

Check code	Check code name	Cause
[E16]	Number/capacity of connected indoor units beyond the limit	1. There are 64 or more connected indoor units. 2. Capacity over of total connected indoor units. 3. Incorrect setup of indoor units' horse power

Sub-code: 00 : Capacity over, 01-: number of connected units

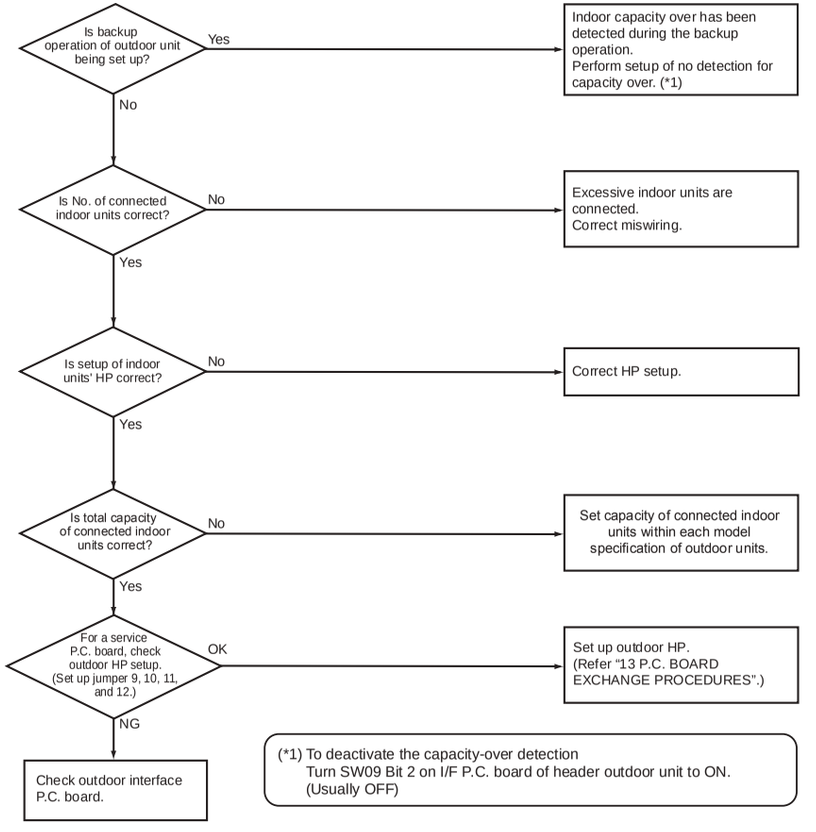

(*1) To deactivate the capacity-over detection
Turn SW09 Bit 2 on I/F P.C. board of header outdoor unit to ON.
(Usually OFF)

Check code	Check code name	Cause
[E23]	Communication signal sending error between outdoor units	1. Inter-unit wire connection error between outdoor units 2. Communication connector connection error between outdoor units, I/F P.C. board error 3. End terminal resistance setup error between outdoor units

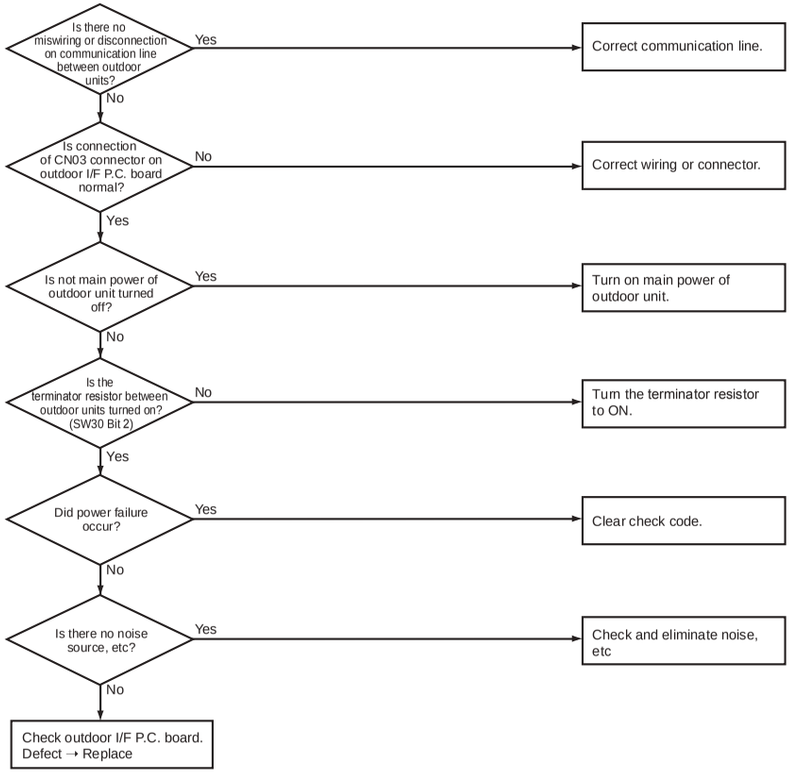

Check code	Check code name	Cause
[E19]	Header outdoor unit quantity error	1. Misconnection of inter-unit wire between indoor and outdoor 2. Outdoor I/F P.C. board error

Sub-code: 00: No header unit 02: Two or more header units

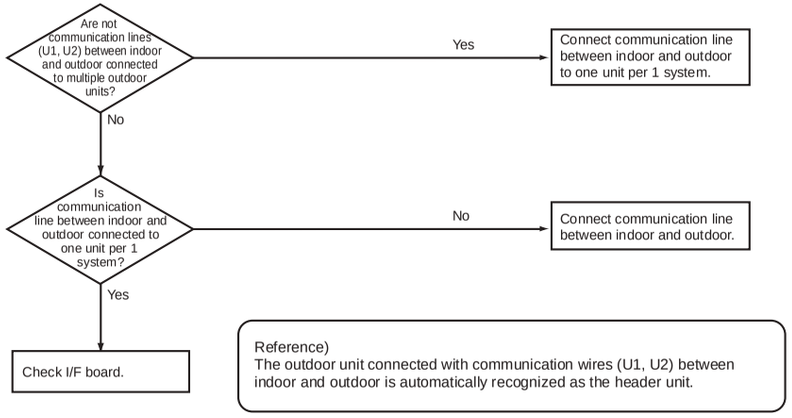

Reference)
The outdoor unit connected with communication wires (U1, U2) between indoor and outdoor is automatically recognized as the header unit.

Check code	Check code name	Cause
[E20]	Unit connected to other line during automatic address	When starting automatic indoor address, a device in another line is connected.

Sub-code: 01: Connection of an outdoor unit in another line 02: Connection of an indoor unit in another line

Separate the connection between the lines following the address setup method.

Check code	Check code name	Cause
[E31]	IPDU communication error	1. Connection error of communication line between IPDU and I/F P.C. board 2. I/F P.C. board error 3. IPDU P.C. board error 4. External noise

Sub-code

	A3-IPDU		Fan-IPDU			A3-IPDU		Fan-IPDU	
	1	2	1	2		1	2	1	2
01	○				10				○
02		○			11	○			○
03	○	○			12		○		○
08			○		13	○	○		○
09	○		○		18			○	○
0A		○	○		19	○		○	○
0B	○	○	○		1A		○	○	○
					1B	○	○	○	○

Circle (O): Faulty IPDU

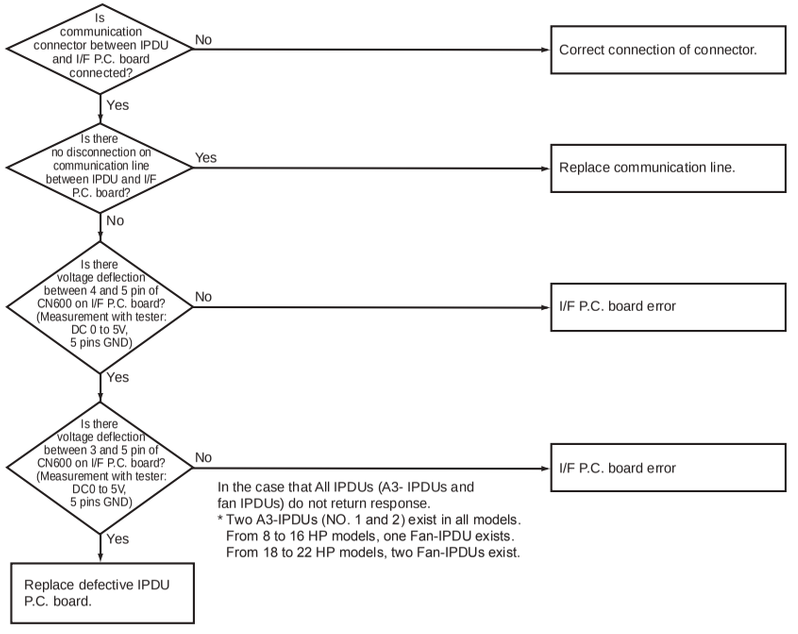

In the case that All IPDUs (A3- IPDUs and fan IPDUs) do not return response.
* Two A3-IPDUs (NO. 1 and 2) exist in all models.
From 8 to 16 HP models, one Fan-IPDU exists.
From 18 to 22 HP models, two Fan-IPDUs exist.

Sub-code : 80
Communication error between MCU and MCU

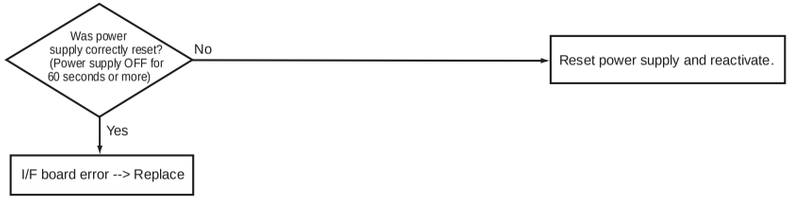

Check code	Check code name	Cause
[E25]	Duplicated follower outdoor address setup	Addresses are duplicated by manual setup of outdoor address

Do not set up outdoor addresses manually.

Check code	Check code name	Cause
[E26]	Decrease of connected outdoor units	1. Outdoor unit backup setup 2. Outdoor power error 3. Communication line connection error between outdoor units 4. Communication connector connection error 5. Outdoor I/F P.C. board error

Sub-code: Address of the outdoor unit receiving signal abnormally

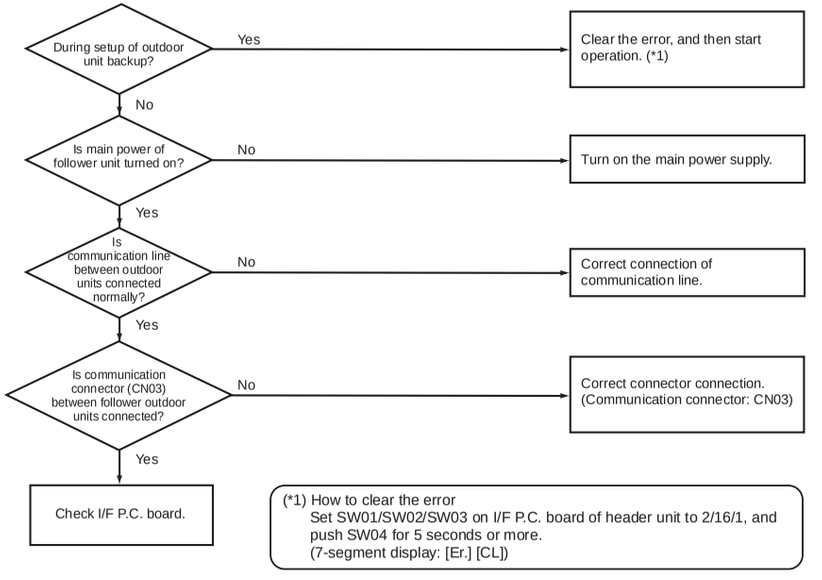

(*1) How to clear the error
Set SW01/SW02/SW03 on I/F P.C. board of header unit to 2/16/1, and push SW04 for 5 seconds or more.
(7-segment display: [Er.] [CL])

Check code	Check code name	Cause
[E28]	Follower outdoor unit error	Error has occurred on a follower outdoor unit.

Sub-code: Detected outdoor unit No.

An error occurred on a follower unit. See the check code on the 7-segment display on I/F P.C. board of the follower unit, and then check it according to diagnose procedure for the check code.
(How to specify the follower outdoor unit in which error occurred)
Push SW04 for 1 second or more under condition that [E28] is displayed on the 7-segment display of the header unit. The fan of the outdoor unit which stopped due to occurrence of error starts rotating. Push SW05 to stop the fan.

Check code	Check code name	Cause
[F03]	Indoor TC1 sensor error	TC1 sensor Open/Short

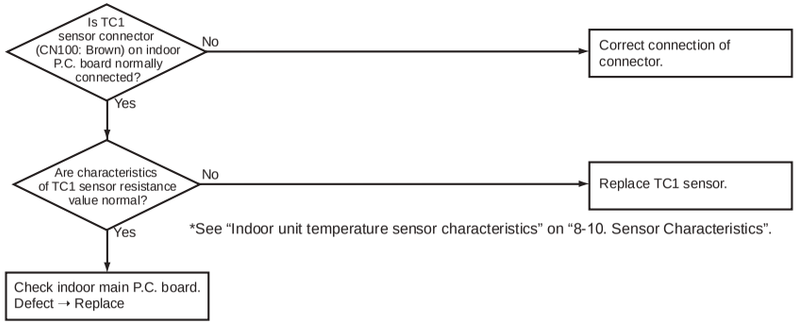

*See “Indoor unit temperature sensor characteristics” on “8-10. Sensor Characteristics”.

Check code	Check code name	Cause
[F04]	TD1 sensor error	TD1 sensor Open/Short

This error code means detection of Open/Short of TD1 sensor. Check disconnection of circuit for connection of connector (TD1 sensor: CN502, White) and characteristics of sensor resistance value. (See “Outdoor unit temperature sensor characteristics” on “8-10. Sensor Characteristics”.)
If sensor is normal, replace outdoor I/F P.C. board.

Check code	Check code name	Cause
[F05]	TD2 sensor error	TD2 sensor Open/Short

This error code means detection of Open/Short of TD2 sensor. Check disconnection of circuit for connection of connector (TD2 sensor: CN503, Pink) and characteristics of sensor resistance value. (See “Outdoor unit temperature sensor characteristics” on “8-10. Sensor Characteristics”.)
If sensor is normal, replace outdoor I/F P.C. board.

Check code	Check code name	Cause
[F06]	TE1,TE2 sensor error	TE1,TE2 sensor Open/Short

This error code means detection of Open/Short of TE1 sensor. Check disconnection of circuit for connection of connector (TE1 sensor: CN520,Green, TE2 sensor : CN521, Red) and characteristics of sensor resistance value. (See “Outdoor unit temperature sensor characteristics” on “8-10. Sensor Characteristics”.)
If sensor is normal, replace outdoor I/F P.C. board.

Check code	Check code name	Cause
[F01]	Indoor TCJ sensor error	TCJ sensor Open/Short

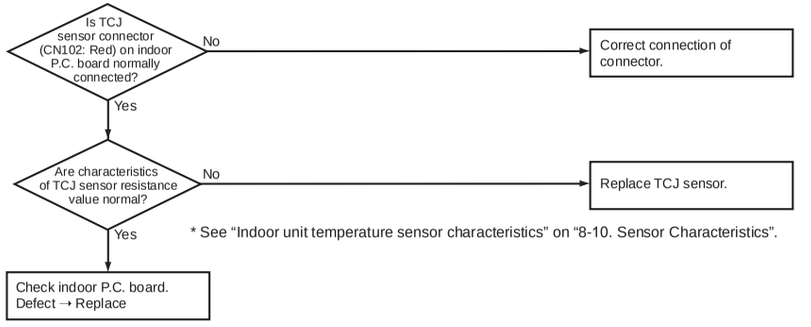

* See “Indoor unit temperature sensor characteristics” on “8-10. Sensor Characteristics”.

Check code	Check code name	Cause
[F02]	Indoor TC2 sensor error	TC2 sensor Open/Short

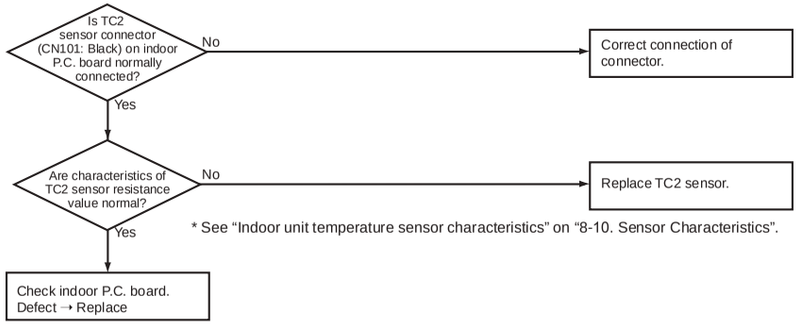

* See “Indoor unit temperature sensor characteristics” on “8-10. Sensor Characteristics”.

Check code	Check code name	Cause
[F13]	TH sensor error	IPM built-in sensor error in A3-IPDU

Sub-code: 01: Compressor 1, 02: Compressor 2

This error code means IPM built-in temperature sensor error.
If sensor is normal, replace IPDU P.C. board.

Check code	Check code name	Cause
[F15]	Outdoor temp sensor miswiring (TE1, TL1)	1. Misinstallation and misconnection of TE1 sensor and TL1 sensor 2. Resistance characteristics error of TE1 sensor and TL1 sensor 3. Outdoor P.C. board (I/F) error

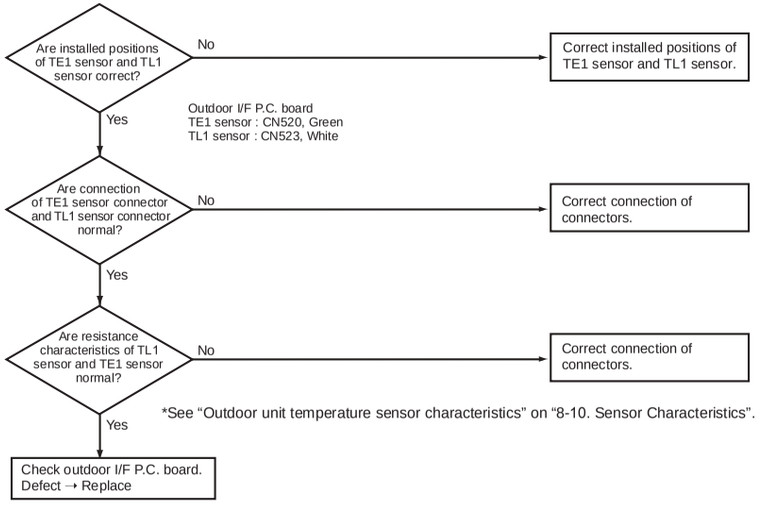

*See “Outdoor unit temperature sensor characteristics” on “8-10. Sensor Characteristics”.

TE1 sensor: Outdoor heat exchanger temp sensor
TL1 sensor: Temp sensor between liquid tank of outdoor PMV

Check code	Check code name	Cause
[F07]	TL1,TL2,TL3 sensor error	TL1,TL2,TL3 sensor Open/Short

Sub-code: 01:TL1, 02;TL2, 03;TL3

This error code means detection of Open/Short of TL1,TL2,TL3 sensor. Check disconnection of circuit for connection of connector (TL1 sensor: CN523WHI, TL2 sensor : CN524 GRY, TL3 sensor: CN902 PNK) and characteristics of sensor resistance value. (See “Outdoor unit temperature sensor characteristics” on “8-10. Sensor Characteristics”.)
If sensor is normal, replace outdoor I/F P.C. board.

Check code	Check code name	Cause
[F08]	TO sensor error	TO sensor Open/Short

This error code means detection of Open/Short of TO sensor. Check disconnection of circuit for connection of connector (TO sensor: CN507, Yellow) and characteristics of sensor resistance value. (See “Outdoor unit temperature sensor characteristics” on “8-10. Sensor Characteristics”.)
If sensor is normal, replace outdoor I/F P.C. board.

Check code	Check code name	Cause
[F09]	TG1, TG2 sensor error	TG1, TG2 sensor Open/Short

Sub-code: 01: TG1, 02: TG2

This error code means detection of Open/Short of TG1, TG2 sensor. Check disconnection of circuit for connection of connector (TG1 sensor: CN525 BLU, TG2 sensor: CN526 WHI) and characteristics of sensor resistance value. (See "Outdoor unit temperature sensor characteristics" on "8-10. Sensor Characteristics".)
If sensor is normal, replace outdoor I/F F.C. board.

Check code	Check code name	Cause
[F10]	Indoor TA/TSA sensor error	TA sensor Open/Short

This error code means detection of Open/Short of TA sensor. Check disconnection of circuit for connection of connector (TA /TSA sensor: CN104, Yellow) and characteristics of sensor resistance value. (See “Indoor unit temperature sensor characteristics” on “8-10. Sensor Characteristics”.)
If sensor is normal, replace indoor P.C. board.

Check code	Check code name	Cause
[F12]	TS1,TS3 sensor error	TS1,TS3 sensor Open/Short

Sub-code: 01:TS1, 03:TS3

This error code means detection of Open/Short of TS1,TS3 sensor. Check disconnection of circuit for connection of connector (TS1 sensor: CN505 WHI, TS3 sensor: CN903 PUR) and characteristics of sensor resistance value. (See “Outdoor unit temperature sensor characteristics” on “8-10. Sensor Characteristics”.)
If sensor is normal, replace outdoor I/F P.C. board.

Check code	Check code name	Cause
[F18]	Indoor TRA sensor error	TRA sensor Open/Short

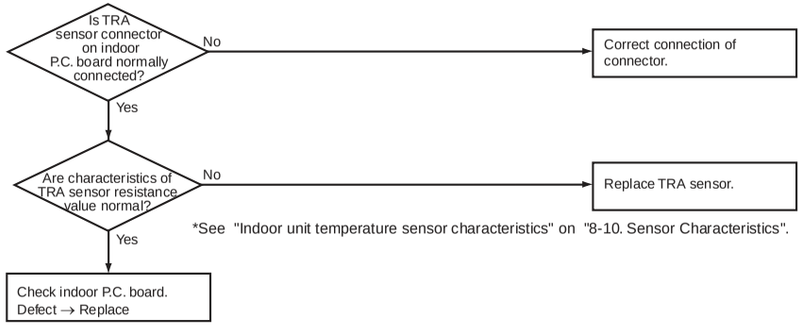

*See "Indoor unit temperature sensor characteristics" on "8-10. Sensor Characteristics".

Check code	Check code name	Cause
[F23]	Ps sensor error	Output voltage error of Ps sensor

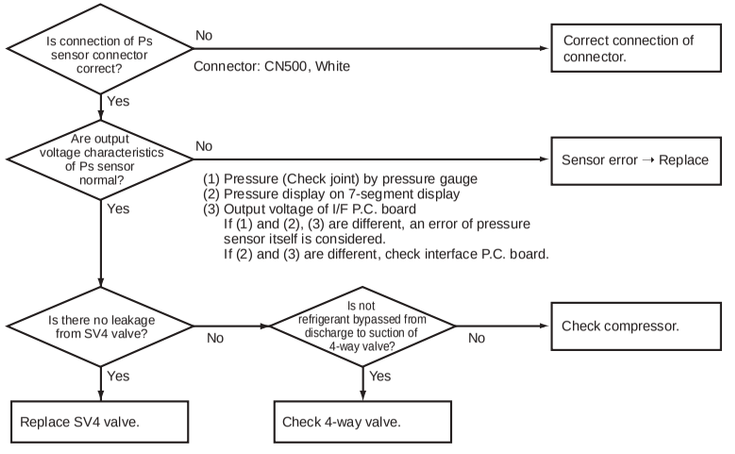

Check code	Check code name	Cause
[F16]	Outdoor pressure sensor miswiring (Pd, Ps)	1. High-pressure Pd sensor and low pressure sensor Ps are exchanged. 2. Output voltage of each sensor is zero.

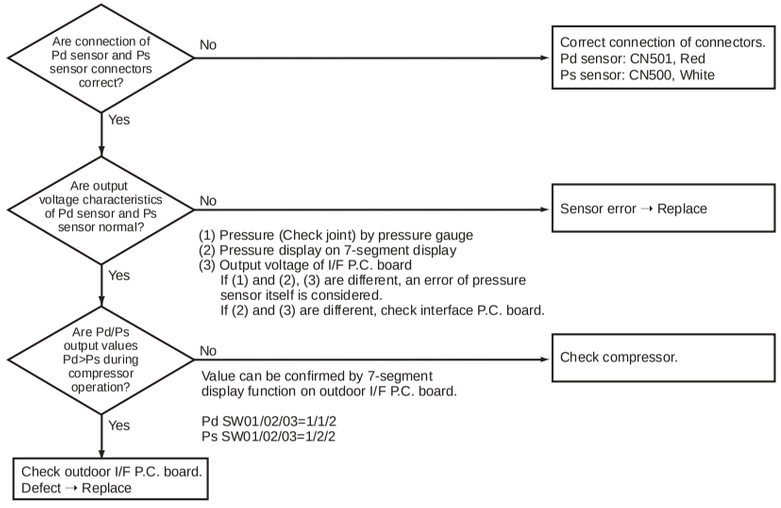

Check code	Check code name	Cause
[F17]	Indoor TOA sensor error	TOA sensor Open/Short

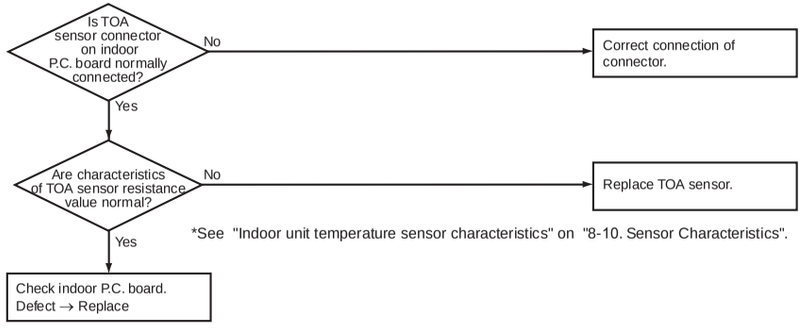

*See "Indoor unit temperature sensor characteristics" on "8-10. Sensor Characteristics".

Check code	Check code name	Cause
[F29]	Indoor other error	Indoor P.C. board error

This error is detected during operation of air conditioner of IC10 non-volatile memory (EEPROM) on indoor unit P.C.board. Replace service P.C. board.

* If EEPROM was not inserted when power was turned on or it is absolutely impossible to read/write EEPROM data, the automatic address mode is repeated.

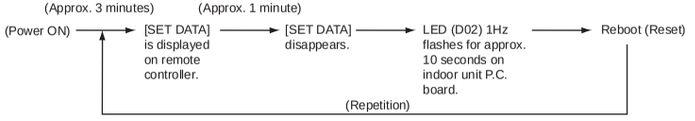

Check code	Check code name	Cause
[F31]	Outdoor EEPROM error	1. Outdoor unit power error (Voltage, noise, etc.) 2. Outdoor I/F P.C. board error

Check code	Check code name	Cause
[F24]	Pd sensor error	Output voltage error of Pd sensor

It is output voltage error of Pd sensor. Check disconnection of connection of connector (Pd sensor: CN501, red) circuit and output voltage of sensor.
If the sensor is normal, replace outdoor I/F P.C. board.

Check code	Check code name	Cause
[H02]	Compressor error (Lock)	1. Outdoor unit power line error 2. Compressor circuit system error 3. Compressor error 4. Refrigerant stagnation in compressor shell 5. A3-IPDU P.C. board error 6. MG-CTT error

Sub-code:
01: Compressor 1,
02: Compressor 2

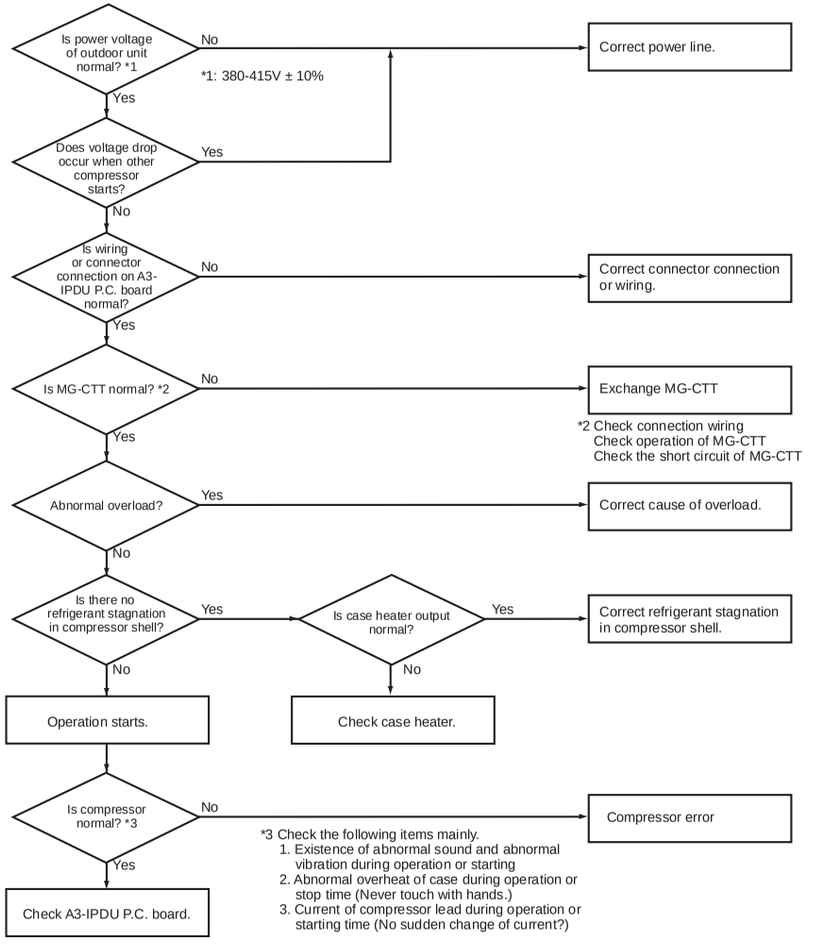

MG-CTT: Magnet contactor

Check code	Check code name	Cause
[H01]	Compressor breakdown Rotor-stop power distribution has occurred.	1. Outdoor unit power line error 2. Compressor circuit system error 3. Compressor error 4. Abnormal overload in operation 5. A3-IPDU P.C. board error

Sub-code:
01: Compressor 1,
02: Compressor 2

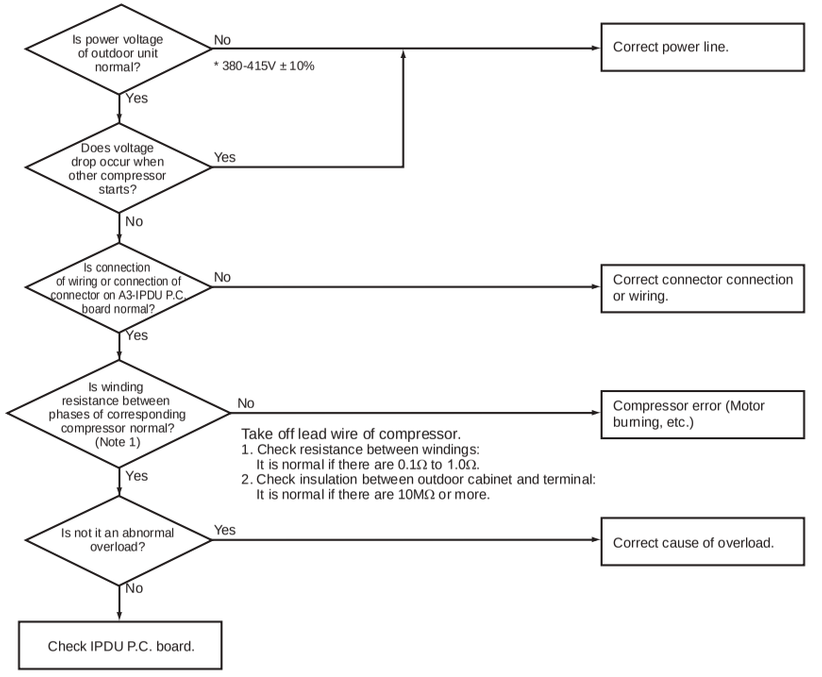

Note 1
After checking the output, when connecting the compressor lead again to the compressor terminal, check surely there is no distortion on the Fasten receptacle terminal.
If it is loosened, caulk it with pinchers, etc and then connect lead to the terminal firmly.

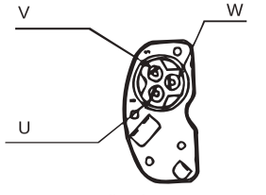

Details of compressor power connecting section

Check code	Check code name	Cause
[H07]	Oil level down detection protection	1. Valves of balance pipes closed. (On all outdoor units in a line) 2. Miswiring or misinstallation of TK1, TK2, TK4, TK5 sensors 3. TK1, TK2, TK4, TK5 sensor error 4. Gas leak or oil leak in a line 5. Refrigerant stagnation of compressor case 6. SV3A, 3B, 3C, 3D valve error 7. Clogging of oil return circuit from oil separator 8. Clogging of oil-equation circuit system

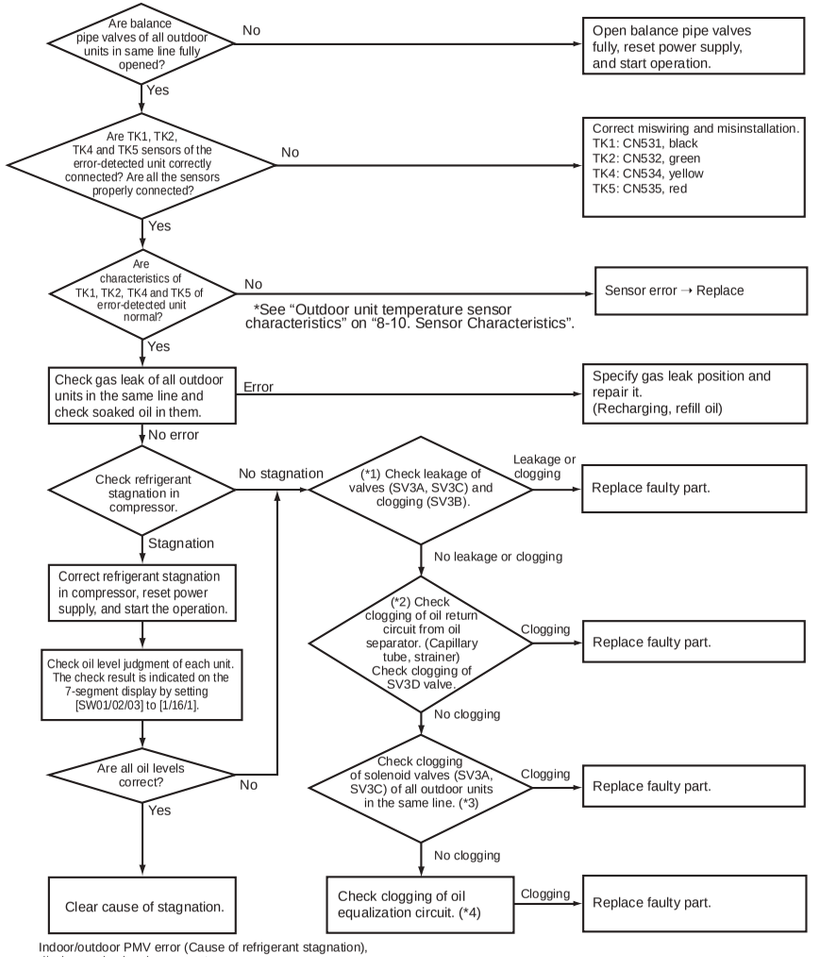

Indoor/outdoor PMV error (Cause of refrigerant stagnation), discharge check valve error, etc.

(Reference) When refrigerant stagnates in compressor shell, the oil level shortage may be

Check code	Check code name	Cause
[H06]	Low-pressure protective operation	1. Service valve close 2. Ps sensor error 3. SV2, SV4 circuit error 4. Miswiring of communication between indoor and outdoor 5. Indoor/outdoor fan and condenser error 6. Indoor/outdoor PMV clogging 7. Indoor/outdoor heat exchanger clogging 8. Refrigerant shortage

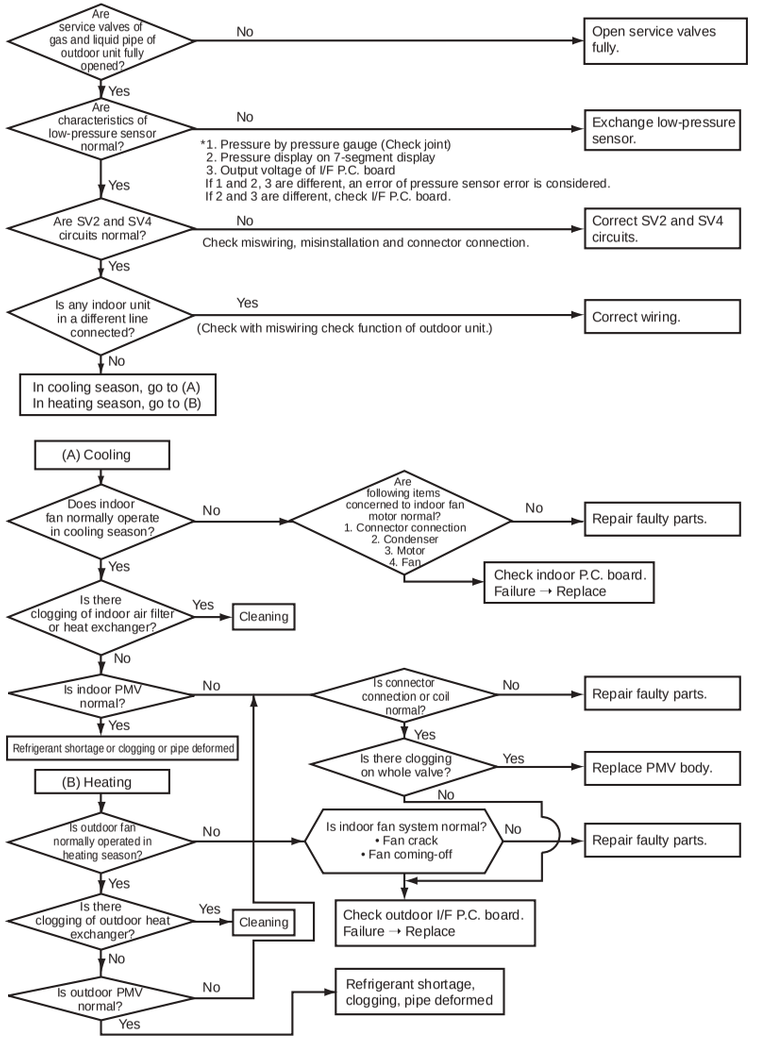

Check code	Check code name	Cause
[H05]	Outdoor discharge temperature sensor (TD1) misconnection	1. Coming-off of TD1 sensor 2.Misinstallation of TD1, TD2 sensor, miswiring, characteristics error of resistance value

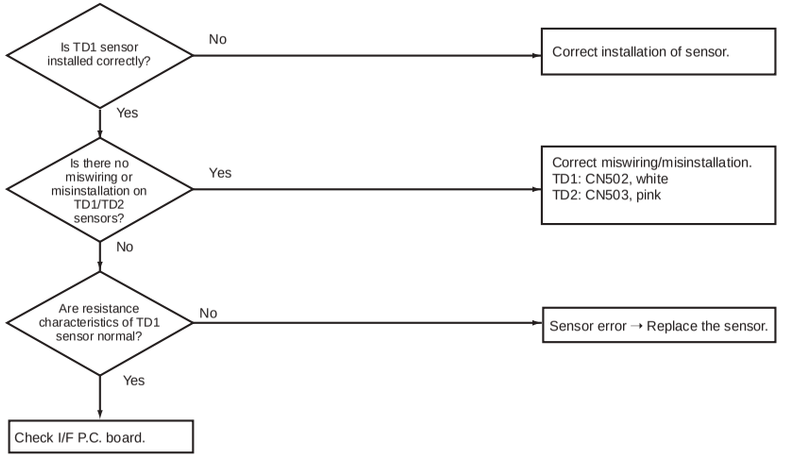

Check code	Check code name	Cause
[H03]	Current detective circuit system error	1. Wiring or connector connection error on A3-IPDU P.C. board 2. A3-IPDU P.C. board error

Sub-code:
01: Compressor 1,
02: Compressor 2

(*2) Checking the oil return circuit from oil separator and clogging in SV3D valve

a) Oil return circuit

- While outdoor unit is operating, check temperature (secondary side of capillary) on oil return circuit. ((6) in the figure.)
  → If temperature is low equivalent to suction temperature), a clogging of strainer of oil return circuit or capillary is considered. Replace the clogged part.

b) Clogging check for SV3D valve

- While outdoor unit is operated, set up SW01/02/03 = [2] [1] [3] (7-segment display [Hr] [... ... ...]), and push SW04 for 2 seconds or more.
- Set up SW02 = [9], and turn on SV3D valve. (7-segment display [Hr] [... 3 d])
- If temperature is low at secondary side of the valve or it does not change, clogging of valve, capillary, or strainer is considered. ((7) in the figure.) Replace the clogged part.

In some cases, it may be difficult to check the leakage of clogging in the following condition of refrigerant stagnation in low ambient temperature condition.
In this case, take a longer operating time prior to check.
(Criterion: Discharge temperature of TD1 and TD2 are 60°C or higher)

(*1) Checking leakage and clogging on solenoid valves

a) Leakage check for SV3A valve (For multiple outdoor unit system)

- Turn off the power supply, take off connector of SV3A valve, and then start a test operation after power-ON.
- Check the temperature change at secondary side of SV3A valve during operation . ((1) in the figure.)
  → If temperature is raised, leakage occurs in the SV3A valve. Replace SV3A valve.

b) Leakage check for SV3C valve

- Turn off the power supply, take off connector of SV3C valve, and then start a test operation after power-ON.
- After operation for several minutes, check temperature at secondary side of SV3C valve. ((2) in the figure.)
  → If temperature is high (equivalent to discharge temperature TD), leakage occurs in the SV3C valve. Replace SV3C valve.
  (Even if leakage does not occur in the SV3C valve, temperature of SV3C valve at secondary side rises during operation. But the temperature is lower than TD when there is no leakage.)

c) Clogging check for SV3B valve (For multiple outdoor unit system)

- While outdoor unit is operated, set up SW01/02/03 = [2] [1] [3] (7-segment display [Hr] [... ... ...]), and push SW04 for 2 seconds or more.
- Set up SW02 = [10], and turn on SV3A, SV3B, SV3C valves. (7-segment display [Hr] [... 3 -])
- While outdoor units are operating, check temperature change at secondary side of SV3B valve. ((4) in the figure.)
  → If temperature does not rise (equivalent to suction temperature), it is a clogging of SV3B valve. Replace SV3B valve.

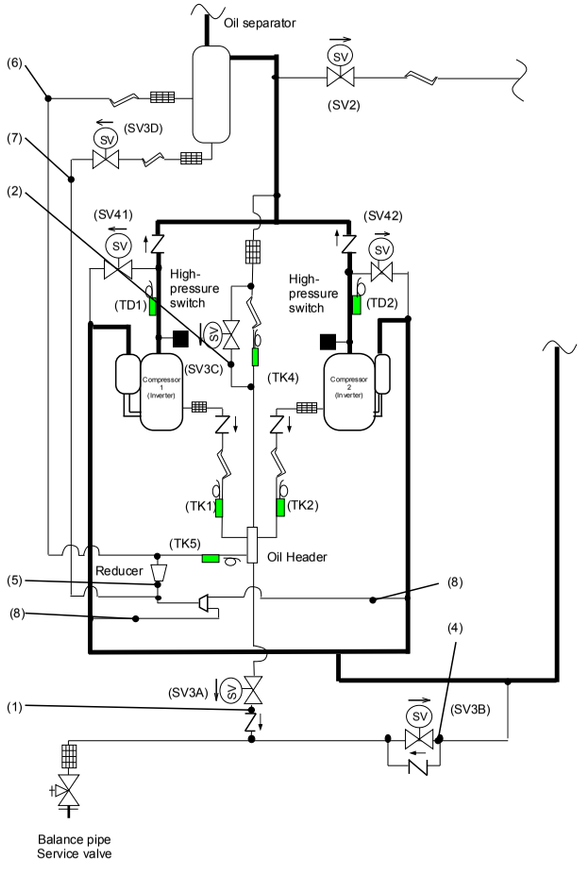

(*3) Check for solenoid valve of all outdoor units in a line (For multiple outdoor unit system)

a) Clogging check for SV3A valve

- While outdoor unit is operating, set up SW01/02/03 = [2] [1] [3] (7-segment display [Hr] [... ... ...]), and push SW04 for 2 seconds or more.
- Set up SW02 = [6], and turn on SV3A valve. (7-segment display [Hr] [... 3 A])
- If temperature is low at secondary side of the valve or it does not change, clogging of valve or check valve is considered. ((1) in the figure.)

b) Leakage check for SV3C valve

- While outdoor unit is operating, set up SW01/02/03 = [2] [1] [3] (7-segment display [Hr] [... ... ...]), and push SW04 for 2 seconds or more.
- Set up SW02 = [8], and turn on SV3C valve. (7-segment display [Hr] [... 3 C])
- If temperature does not change (up), clogging of valve or strainer is considered. ((2) in the figure.)

(*4)

a) Clogging check for oil-equalization circuit

- Drive the outdoor unit. (Drive all compressors in the unit.)
- After driving for 10 minutes or more, check whether temperature of TK1, TK2 sensors and temperature of oil-equalization circuit capillary ((8) in the figure) has increased.
  (Criterion)
  TK1, TK2=Td1, Td2 temperature - Approx. 10 to 30°C
  Oil-equalization capillary tubes should be higher sufficiently than outside air temperature and suction temperature.
- If temperature is low, a malfunction on check valves or clogging of capillary, strainer or distributor is considered. Repair the defective parts.

Check code	Check code name	Cause
[H16]	Oil level detection circuit error TK1 temperature detective circuit error (Sub-code: 01)	1. Coming-off of TK1 sensor, miswiring, characteristics error of resistance value 2. Oil-equalization circuit error (Check valve, capillary clogging, strainer clogging) 3. Refrigerant stagnation in the compressor shell

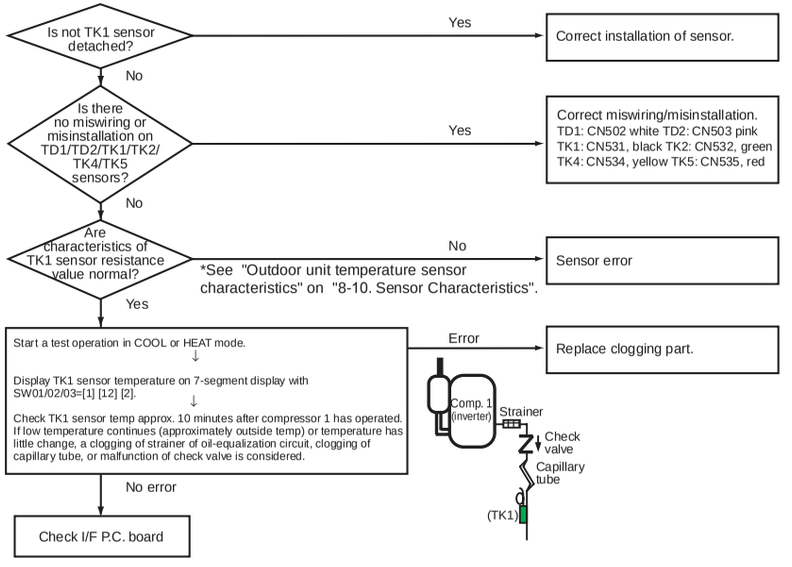

Check code	Check code name	Cause
[H08]	Oil level detective temperature sensor error	TK1, TK2, TK4, TK5 sensor Open/Short

Sub-code:
01: TK1 sensor error 02: TK2 sensor error
04: TK4 sensor error 05: TK5 sensor error

The detected error is an oil level detective temperature sensor error. Check disconnection of the wiring and resistance value of the sensor.
If the sensors are normal, replace the outdoor I/F P.C. board.

Circuit	Connector
TK1	CN531 (Black)
TK2	CN532 (Green)
TK4	CN534 (Yellow)
TK5	CN535 (Red)

Check code	Check code name	Cause
[H15]	Outdoor discharge temperature sensor (TD2) misconnection	1. Coming-off of TD2 sensor 2.Misinstallation of TD1 or TD2 sensor, miswiring, characteristics error of resistance value

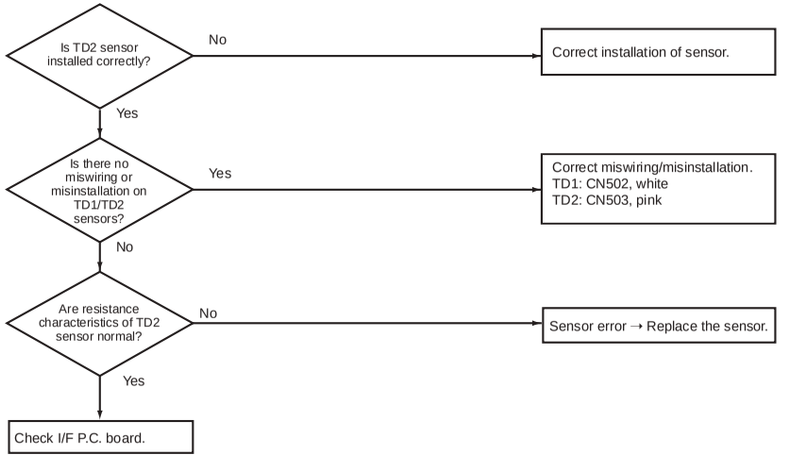

Check code	Check code name	Cause
[H16]	TK4 temperature detective circuit error (Sub-code: 04)	1. Coming-off of TK4 sensor, miswiring, characteristics error of resistance value 2. Refrigerant stagnation in the compressor shell

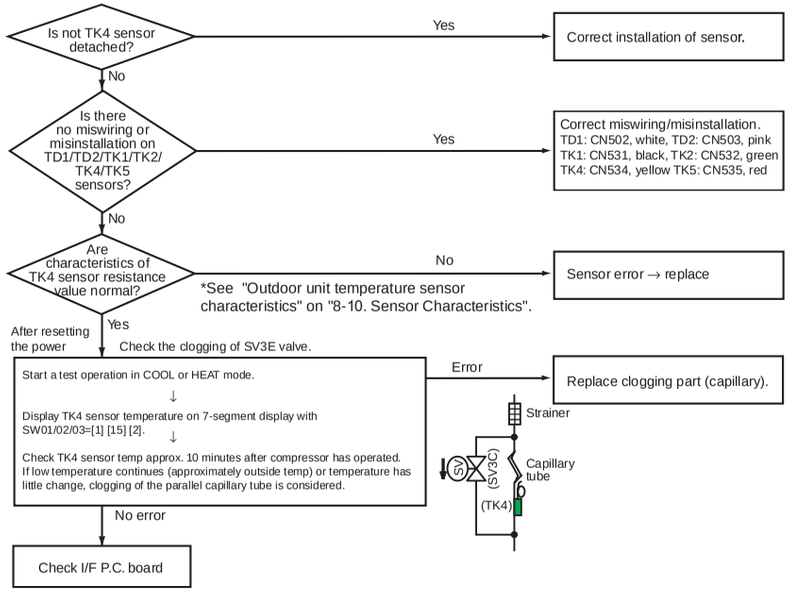

Check code	Check code name	Cause
[H16]	Oil level detection circuit error TK2 temperature detective circuit error (Sub-code: 02)	1. Coming-off of TK2 sensor, miswiring, characteristics error of resistance value 2. Oil-equalization circuit error (Check valve, capillary clogging, strainer clogging) 3. Refrigerant stagnation in the compressor shell

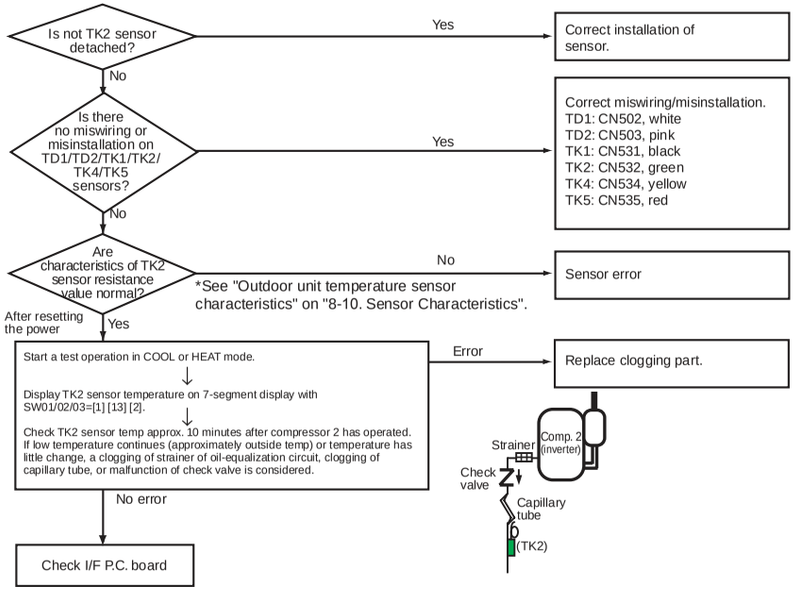

Check code	Check code name	Cause
[H16]	TK5 temperature detective circuit error (Sub-code: 05)	1. Coming-off of TK5 sensor, miswiring, characteristics error of resistance value 2. Refrigerant stagnation in the compressor shell

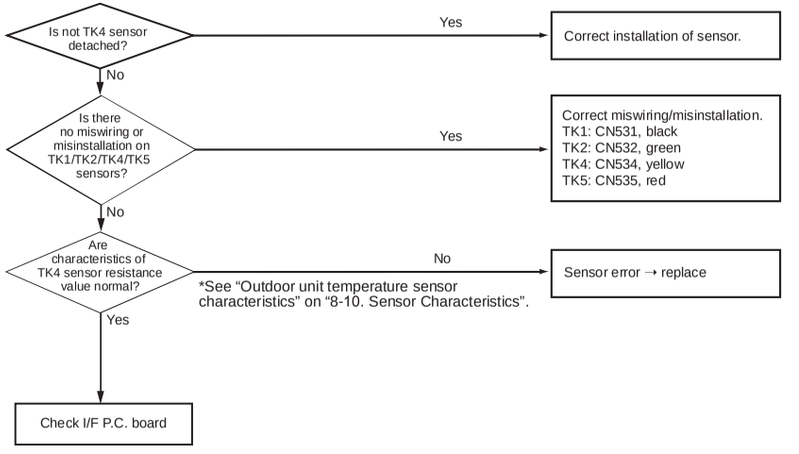

Check code	Check code name	Cause
[L05]	Duplicated indoor units with priority (Displayed on indoor unit with priority)	Two or more prior indoor units exist.

This check code is displayed on the indoor unit set as a prior one when two or more prior indoor units are detected.
• Priority setup with two or more units is not available. As only one indoor unit with priority is valid, change the setup.

Check code	Check code name	Cause
[L06]	Duplicated indoor units with priority (Displayed on the indoor units other than ones with priority and on the outdoor unit)	Two or more indoor units with priority are duplicated.

Sub-code: amount of indoor units with priority

When priority is given to two or more indoor units, this check code is displayed on indoor units other than the units set as prior ones and the outdoor unit.
• As only one indoor unit with priority is valid, change the setup.

Check code	Check code name	Cause
[L07]	A group line exists in an individual indoor unit	A group line is connected to an individual indoor unit.

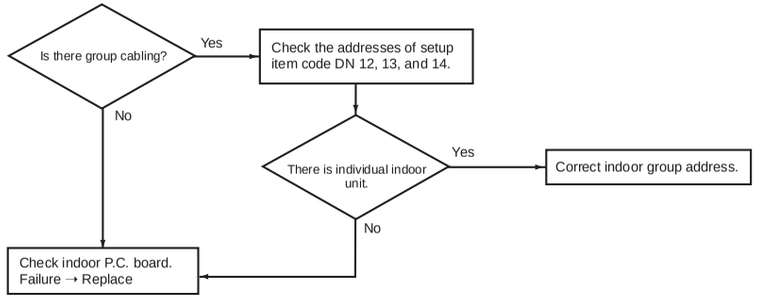

Check code	Check code name	Cause
[L02]	Outdoor units model disagreed error	When the indoor unit that does not correspond is connected with the outdoor unit

Check code	Check code name	Cause
[L03]	Duplicated indoor header units	There are two or more indoor header units in a group during group control.

1) Check whether the connection on remote controllers (group and/or individual) has been changed since the group configuration and address checking on the remote controllers finished.
2) If the group configuration and address are normal when power has been turned on, the mode automatically shifts to address setup mode. For setting up addresses again, refer to "Address setup".

Check code	Check code name	Cause
[L04]	Duplicated setup of outdoor line address	Outdoor line addresses are duplicated.

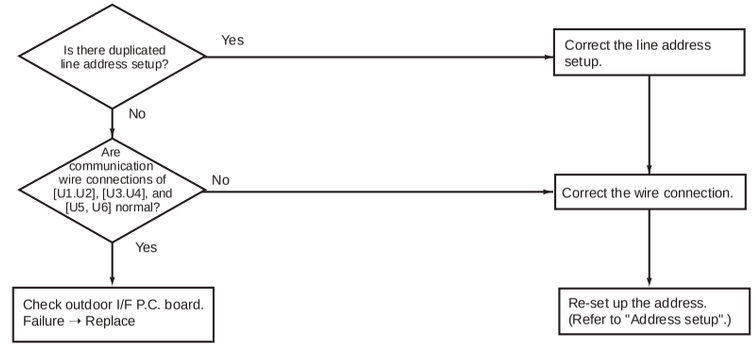

Check code	Check code name	Cause
[L17]	Incompatible combination of outdoor units	A SMMS-e series outdoor unit (SMMS6 series unit) and an SMMS-i series outdoor unit (SMMS4 series unit)

A SMMS-e series outdoor unit (SMMS6 series unit) can't be connected with a SMMS-i series outdoor unit (SMMS4 series unit) or older. Use it with another SMMS-e unit.

Check code	Check code name	Cause
[L20]	Duplicated central control addresses	Central control addresses are duplicated.

Check code	Check code name	Cause
[L23]	SW setting mistake	Bit 3 and 4 of SW17 are turning on.

Check code	Check code name	Cause
[L28]	Quantity over of connected outdoor units	1. Quantity over of connected outdoor units. 2. Connection error of communication line between outdoor units 3. Outdoor I/F P.C. board error

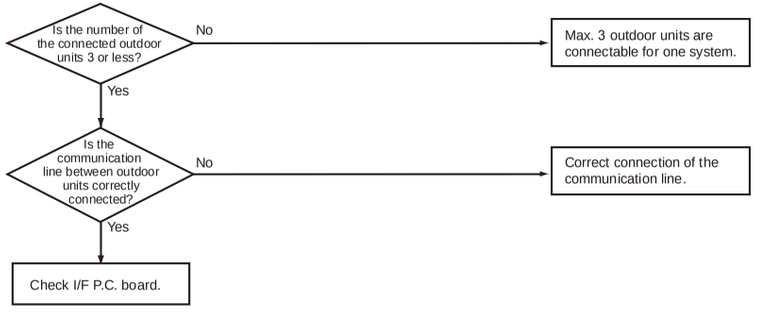

Check code	Check code name	Cause
[L08]	Indoor group / address unset	Indoor unit address is unset

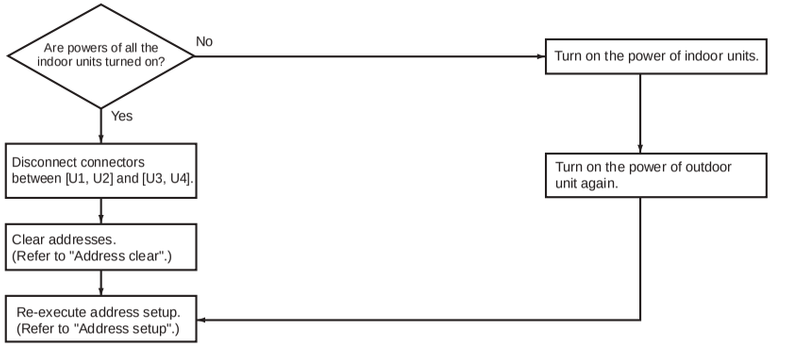

Note) This code is displayed when the power is turned on at the first time after installation. (Because the address is not yet set up)

Check code	Check code name	Cause
[L09]	Indoor capacity unset	Indoor unit's capacity is unset

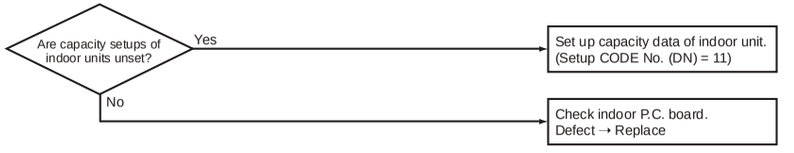

Check code	Check code name	Cause
[L10]	Outdoor capacity unset	On the outdoor IF P.C. board for service, the model selecting jumper has not been set up so as to match with the model.

I/F P.C. board A'ssy service for the outdoor unit is common to this series. A setup for model selection different from that for P.C. board with trouble is necessary. Set up a model based upon the P.C. board A'ssy exchange procedure.

Check code	Check code name	Cause
[L30]	Interlock in indoor unit from outside	Abnormal input from the outside

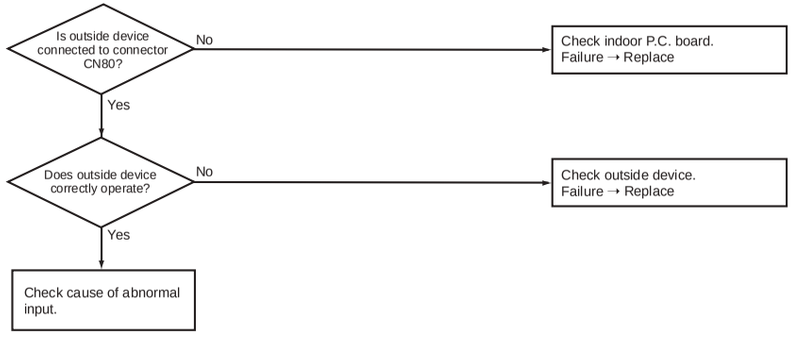

Check code	Check code name	Cause
[L31]	Other IPDU errors	1. Outdoor unit power error 2. Outdoor I/F P.C. board error

Check code	Check code name	Cause
[P01]	Indoor fan motor error	1. Wiring error 2. Check fan motor.

* For the models equipped with AC fan motor only

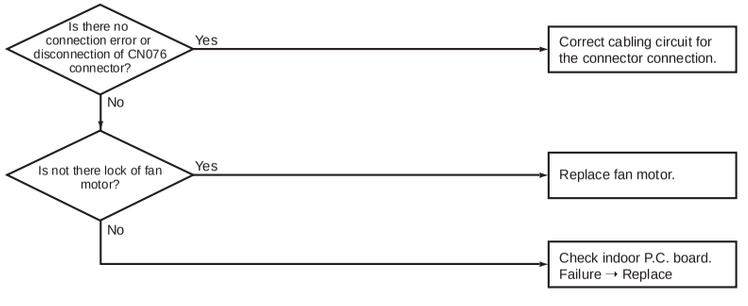

Check code	Check code name	Cause
[L29]	IPDU quantity error	1. Incorrect model setup in service for I/F P.C. board 2. Communication error between A3-IPDU, fan IPDU and I/F 3. A3-IPDU, fan IPDU, I/F P.C. board error

Sub-code

	A3-IPDU		Fan-IPDU			A3-IPDU		Fan-IPDU	
	1	2	1	2		1	2	1	2
01	○				10				○
02		○			11	○			○
03	○	○			12		○		○
08			○		13	○	○		○
09	○		○		18			○	○
0A		○	○		19	○		○	○
0B	○	○	○		1A		○	○	○
					1B	○	○	○	○

Circle (O): Faulty IPDU

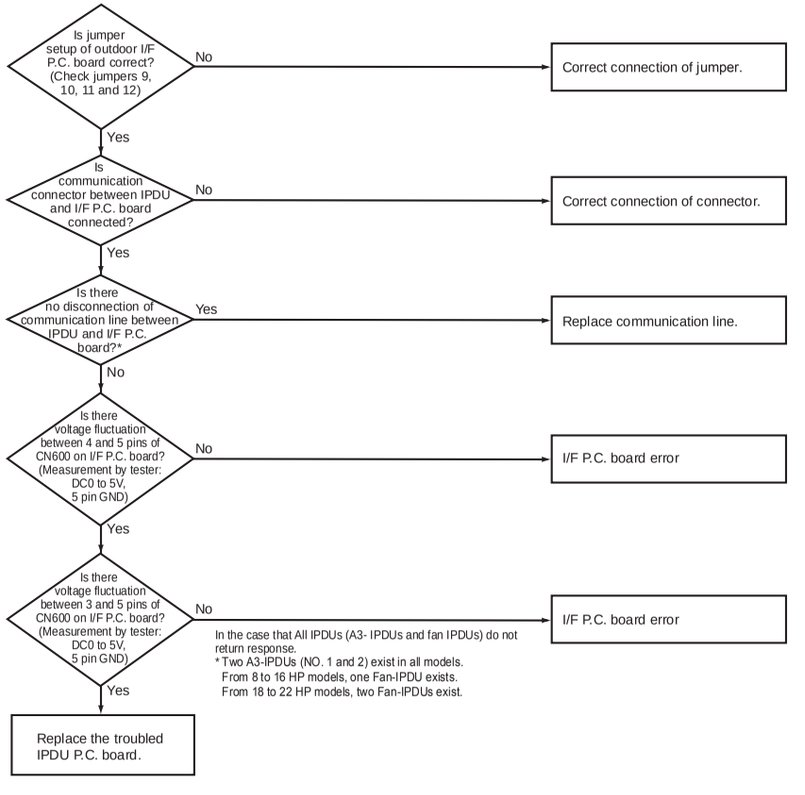

Check code	Check code name	Cause
[P04]	Error concerning high-pressure SW	1. High-pressure SW error 2. Service valve closed 3. Pd sensor error 4. Indoor/outdoor fan error 5. Indoor/outdoor PMV choke 6. Indoor/outdoor heat exchanger clogging, air short circuit 7. SV2 circuit error 8. SV4 circuit error 9. SV5 circuit error 10. Discharge line check valve malfunction 11. Refrigerant overcharge

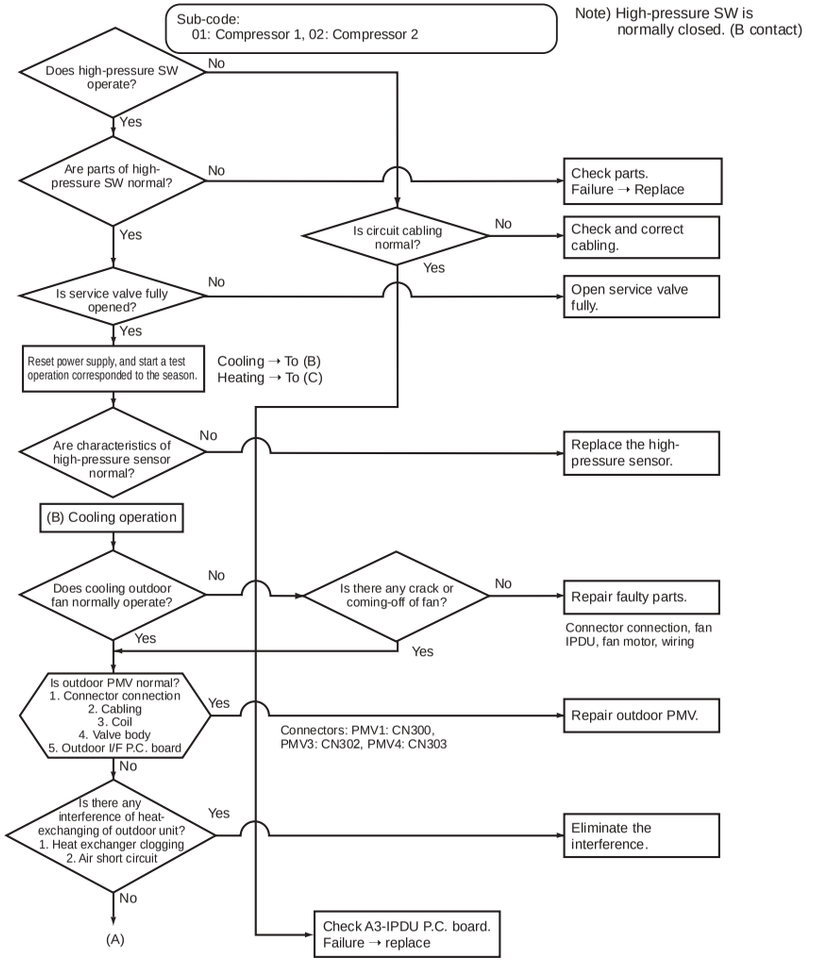

Check code	Check code name	Cause
[P03]	Discharge temp TD1 error	1. Service valve of outdoor unit closed 2. Outdoor PMV error 3. TD sensor error 4. Refrigerant shortage, clogging of refrigerant piping 5. 4-way valve error 6. SV4 circuit leakage, misinstallation

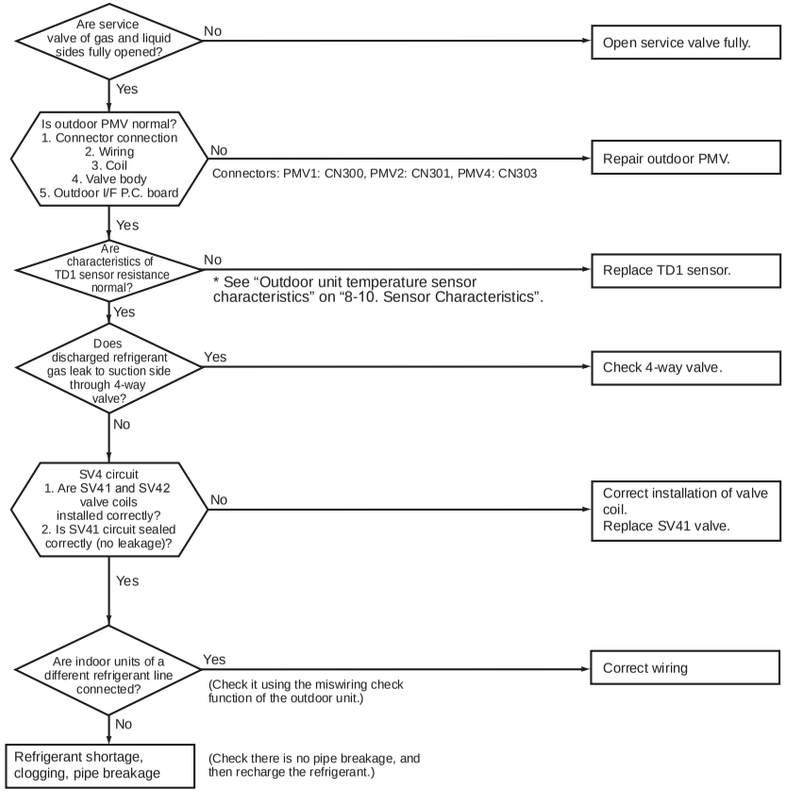

Check code	Check code name	Cause
[P05]	Phase error detected, power failure detected, abnormal inverter DC voltage (on compressor)	Phase error or power failure of the power supply to the outdoor unit

Sub-code: 00: Phase error/power failure is detected. 01: Abnormal inverter DC voltage on Compressor 1,
02: Abnormal inverter DC voltage on Compressor 2

- Check the phase of the power line to the outdoor unit.
- Check error of outdoor I/F P.C. board.
- Check there are no loosened connectors, etc.
- Check connection wiring of MG-CTT.
- Check operation of MG-CTT.

Check code	Check code name	Cause
[P07]	Heat sink overheat error	1. Power voltage error 2. Outdoor fan system error 3. Heat sink installation error 4. Clogging of the cooling duct for the heat sink 5. A3-IPDU P.C. board error 6. Temperature sensor trouble with built-in IPM

Sub-code:
01: Compressor 1,
02: Compressor 2

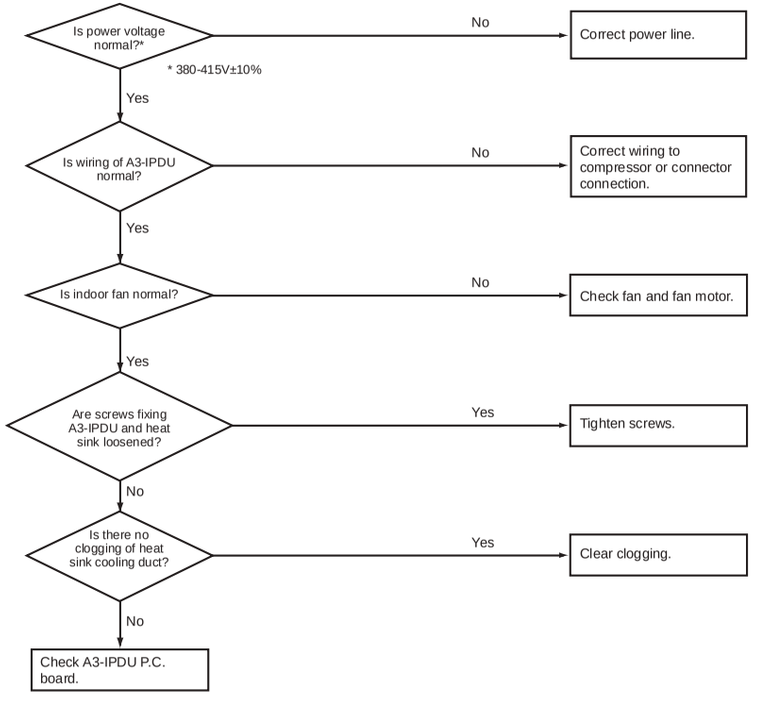

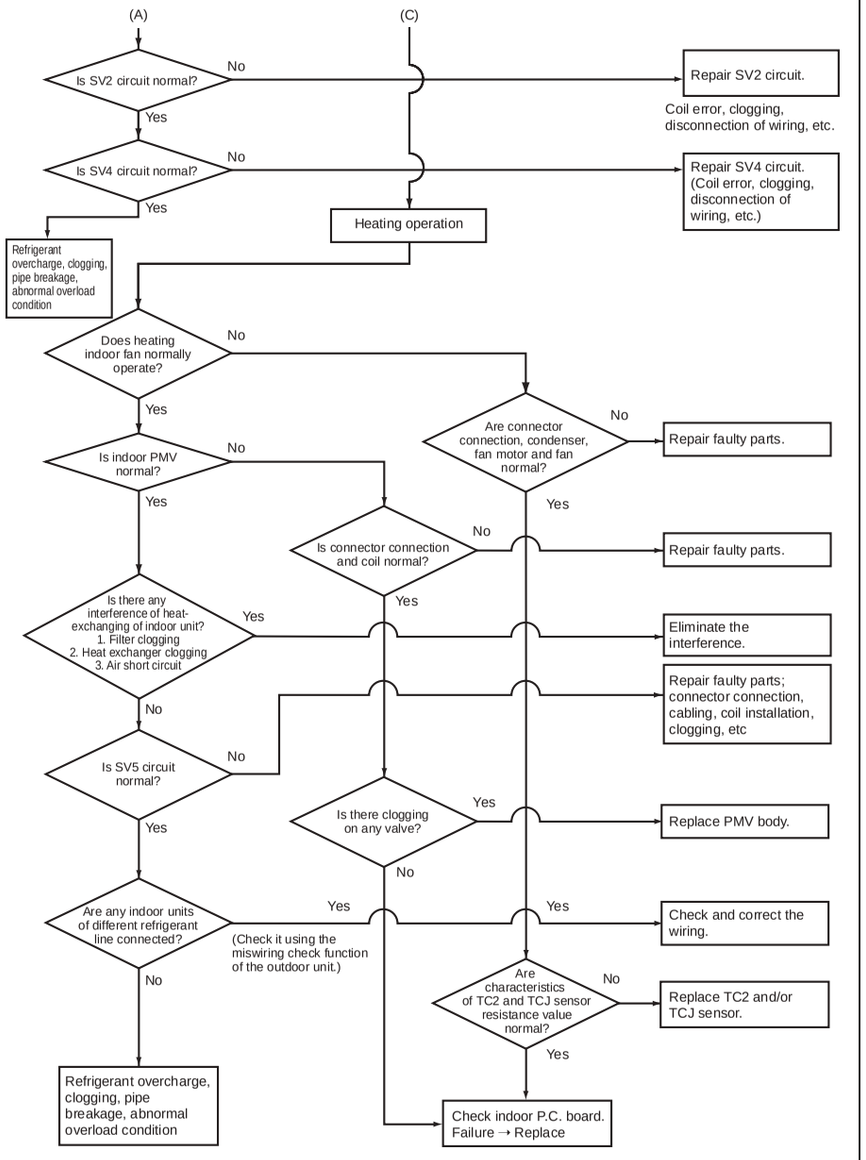

Check code	Check code name	Cause
[P12]	Indoor fan motor error	1. Wiring error of fan motor connector 2. Fan motor error 3. Indoor P.C. board error

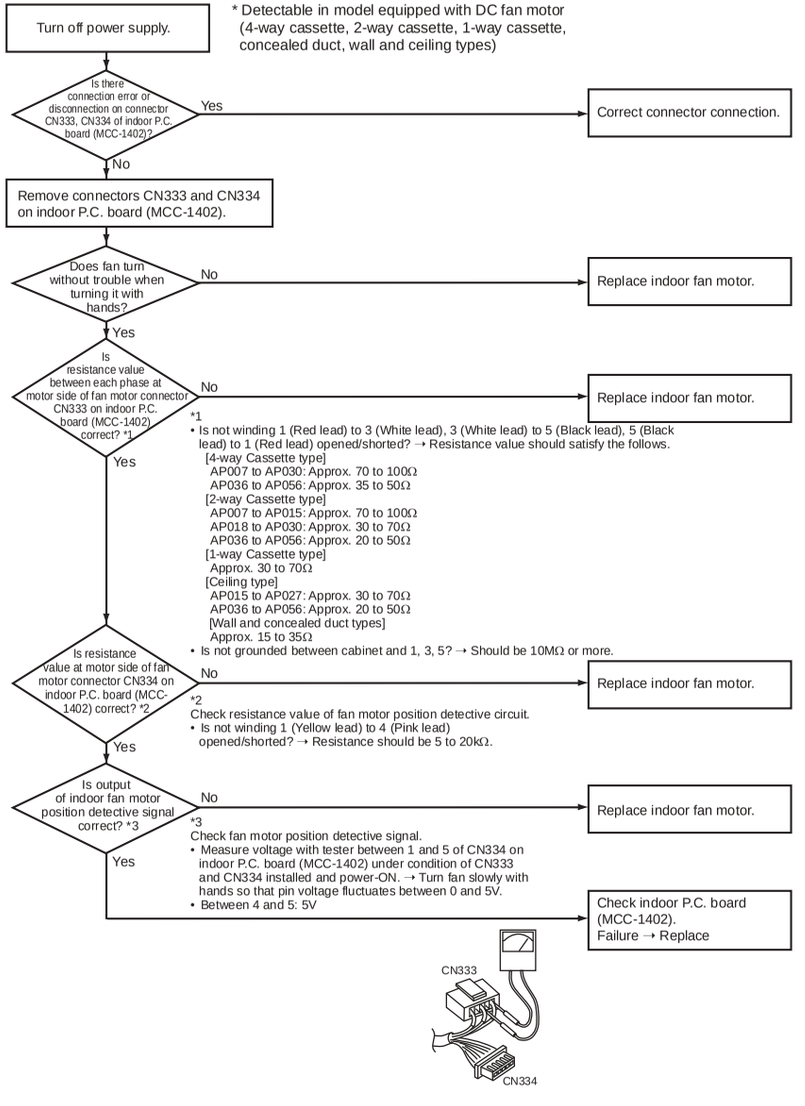

Check code	Check code name	Cause
[P10]	Water overflow in an indoor unit	1. Float SW malfunction 2. Drain pump malfunction 3. Clogging of drain pipe 4. Indoor P.C. board error

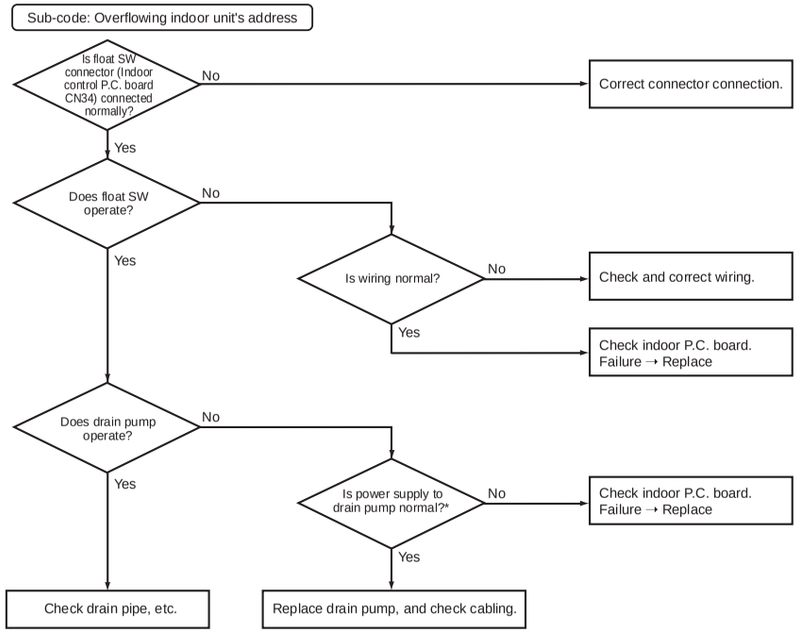

* Check there is 220-240V voltage of 1-3 pin of CN68 on indoor P.C. board.

Check code	Check code name	Cause
[P15]	Gas leak detection TS condition (Sub-code: 01)	1. Outdoor unit service valve closed 2. Outdoor PMV error 3. TS1 sensor error 4. Refrigerant shortage, clogging refrigerant circuit 5. 4-way valve error 6. SV4 circuit error

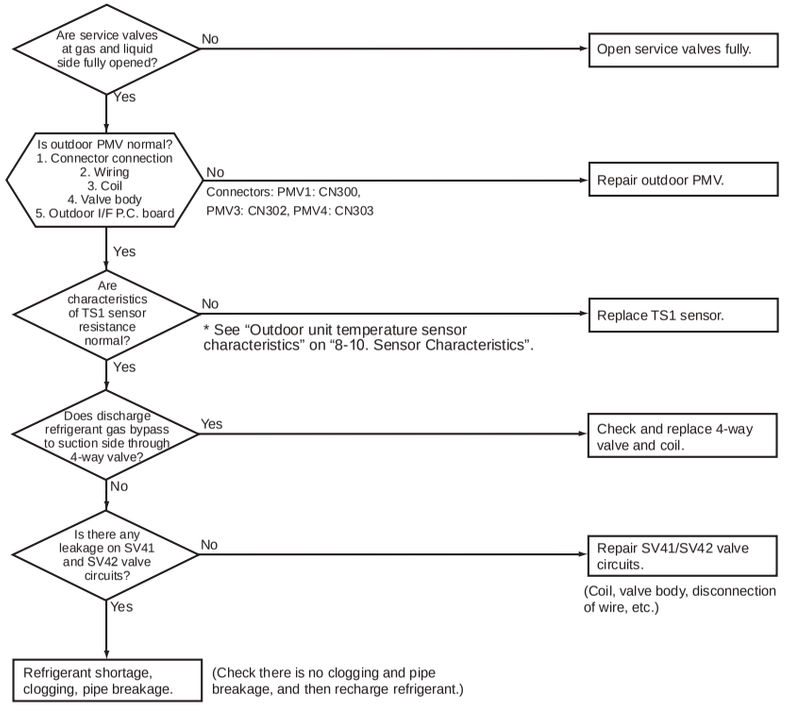

Check code	Check code name	Cause
[P13]	Outdoor liquid back detection error	1.PMV1/PMV3/PMV4 error 2. Pd sensor, Ps sensor error 3. Clogging of SV2 circuit 4. Clogging of SV3B circuit and/or balance pipe 5. Leakage at a check valve on a main discharge pipe 6. Outdoor I/F P.C. board error

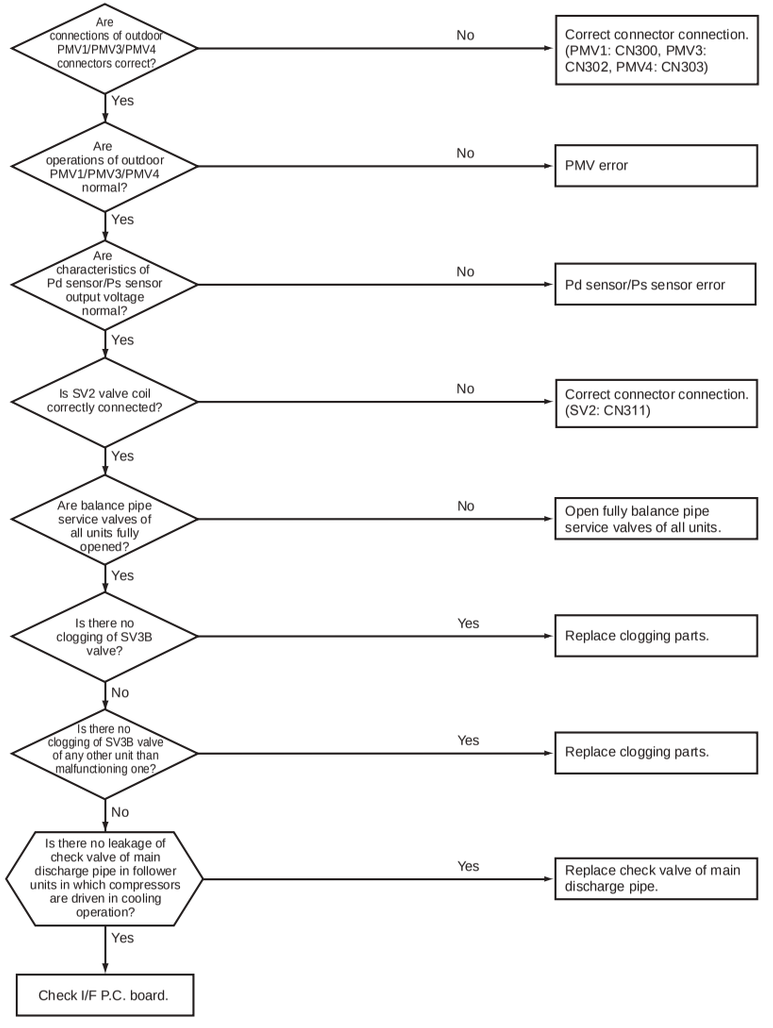

Check code	Check code name	Cause
[P17]	Discharge temp TD2 error	1. Outdoor unit service valve closed 2. Outdoor PMV error 3. TD sensor error 4. Refrigerant shortage, clogging of refrigerant circuit 5. 4-way valve error 6. SV4 circuit leakage, misinstallation

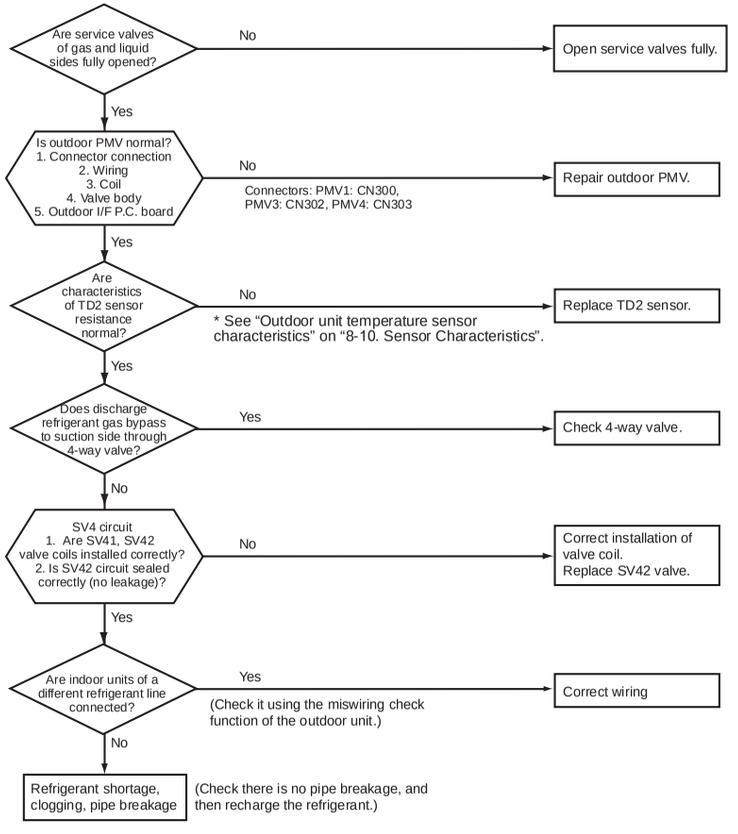

Check code	Check code name	Cause
[P15]	Gas leak detection TD condition (Sub-code: 02)	1. Outdoor unit service valve closed 2. Outdoor PMV error 3. TD sensor error 4. SV4 circuit error 5. Refrigerant shortage, clogging refrigerant circuit

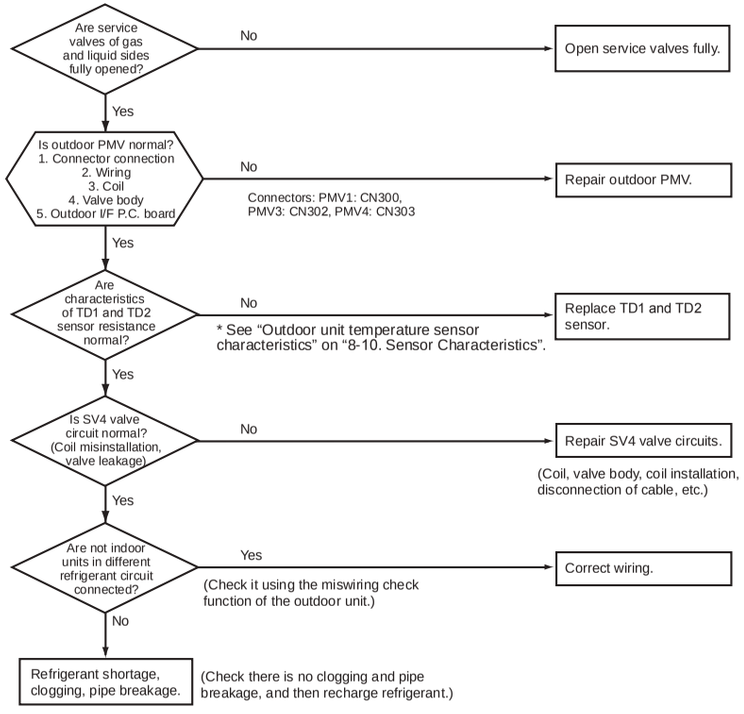

Check code	Check code name	Cause
[P20]	High-pressure protective operation	1. Pd sensor error 2. Service valve closed. 3. Indoor/outdoor fan error 4. Indoor/outdoor PMV clogging 5. Indoor/outdoor heat exchanger clogging 6. SV2 circuit error 7. SV4 circuit error 8. SV5 circuit error 9. Outdoor I/F P.C. board error 10. Operation error of check valve of main discharge pipe 11. Refrigerant overcharge

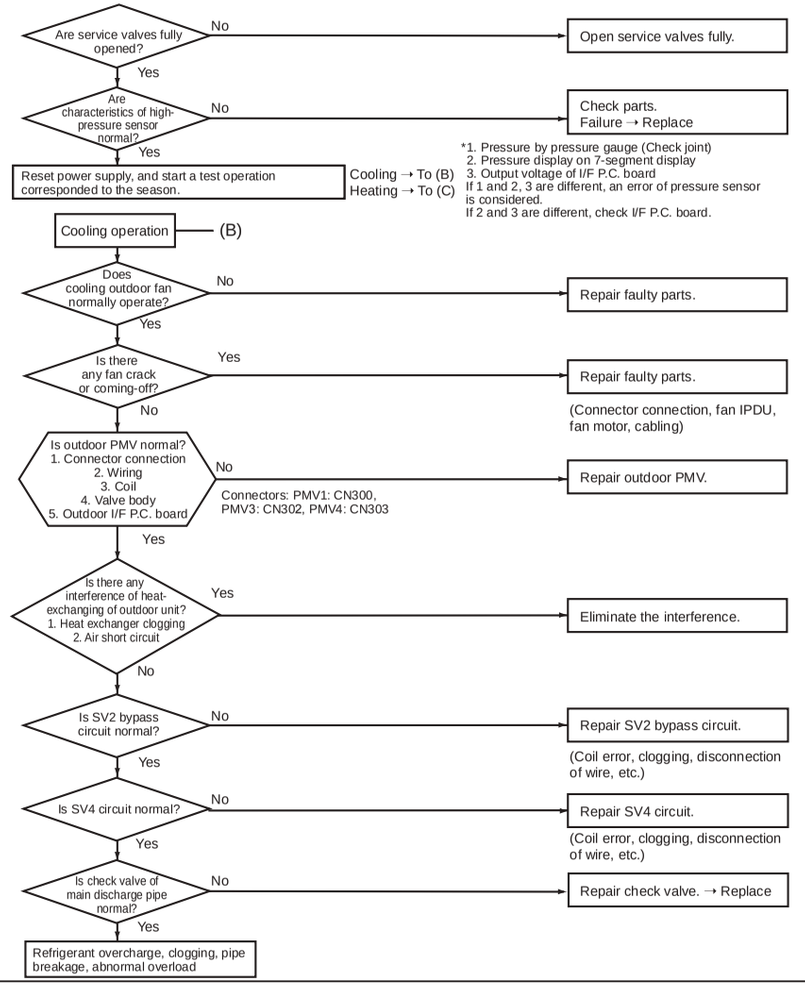

Check code	Check code name	Cause
[P19]	4-way valve reverse error	1. 4-way valve error 2. TS1 sensor/TE1 sensor error 3. Pd sensor/Ps sensor error 4. TE sensor/TL sensor misconnection

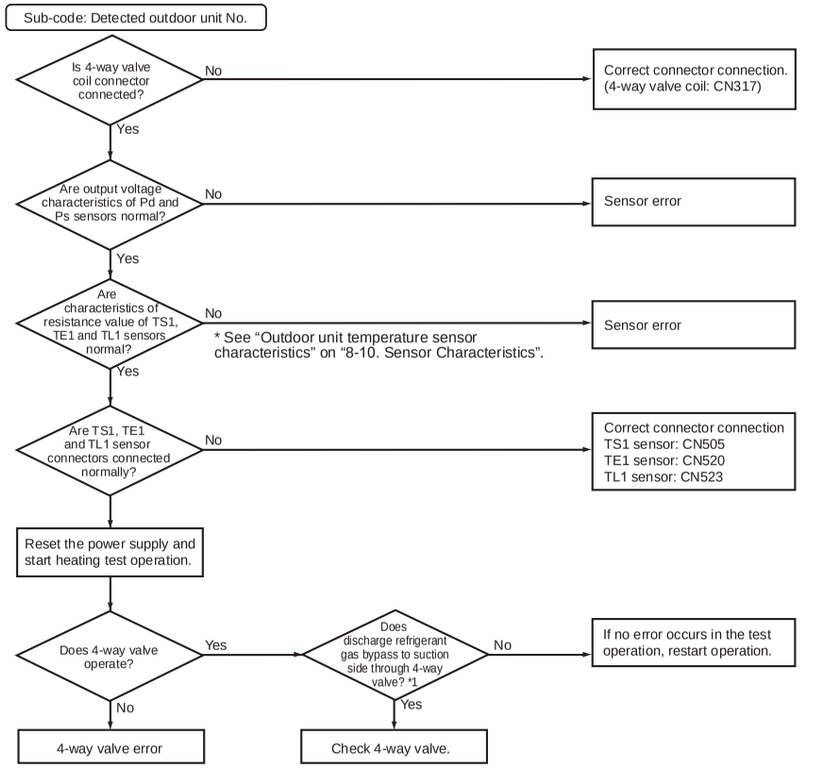

*1 Check TS1 and TE1 temperature of the outdoor unit which is running.
(I/F) SW01=[1], SW02=[6], SW03=[2] → TS sensor temperature
SW01=[1], SW02=[7], SW03=[2] → TE sensor temperature

<Judgment criteria>
TE1 sensor: Normal if TE1 is 30°C or less in the seasons except summer (Outside temp 20°C or lower)
TS1 sensor: Normal if TS is 50°C or less in the seasons except summer (Outside temp 20°C or lower)

Check code	Check code name	Cause
[P22]	Outdoor fan IPDU error	1. Fan lock 2. Fan IPDU P.C. board error 3. Overload 4. External cause such as blast

Sub-code:
- *0: IPM short circuit
- *1: Position detection circuit error
- *3: Motor lock
- *4: Motor current error detected
- *C: TH sensor temperature error
- *D: TH sensor error
- *E: Fan Vdc error
- * : 1:Fan1,2:Fan2

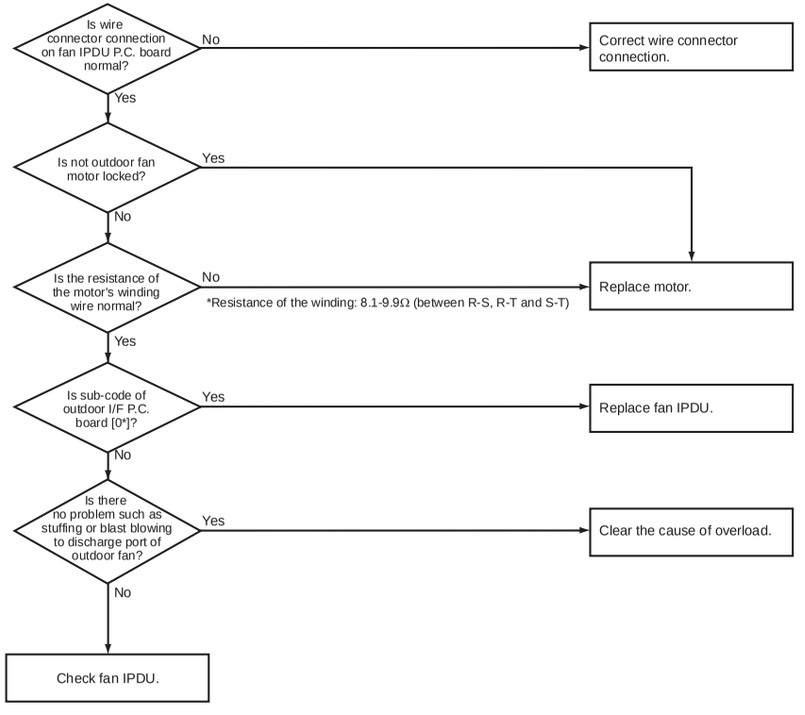

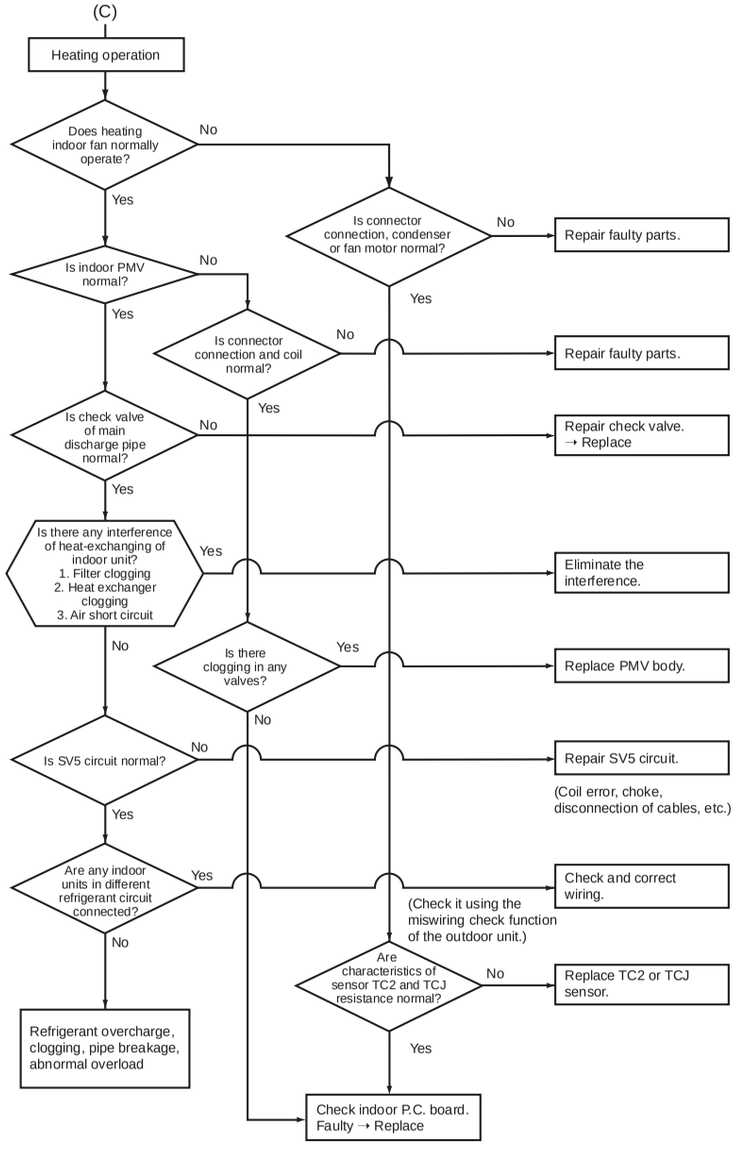

Check code	Check code name	Cause
[P29]	Compressor position detective circuit error	1. Wire/connector connection error 2. Compressor error 3. A3-IPDU P.C. board error

Sub-code:
01: Compressor 1, 02: Compressor 2

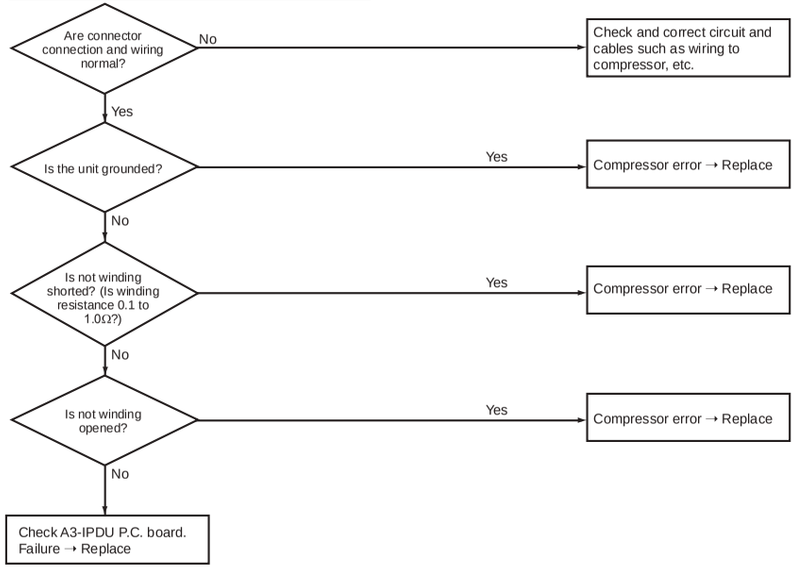

Check code	Check code name	Cause
[P31]	Other indoor error (Group follower unit error)	Another indoor unit in the group is abnormal.

When the header unit of the group detected error [E03], [L03], [L07] or [L08], the follower unit of the group displays [P31] error and stops. There are no check code display and alarm record of the main remote controller.

Check code	Check code name	Cause
[P26]	IPM short-circuit protection error	1. Outdoor unit power error 2. A3-IPDU error/Wire connection error 3. Compressor error 4. A3-IPDU P.C. board error

Sub-code:
01: Compressor 1, 02: Compressor 2

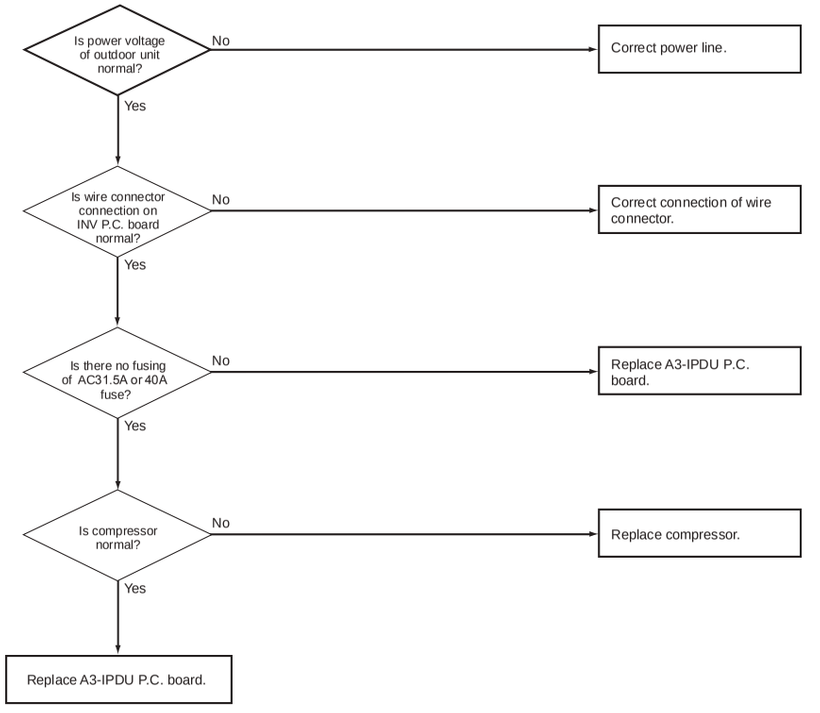

8-6. 7-Segment Display Function

7-segment display on outdoor unit (interface P.C. board)

The interface control P.C. board features a 7-segment LED display designed to check operational status. Display items can be changed by changing the combination of the number settings of rotary switches provided on the P.C. board (SW01, SW02 and SW03).

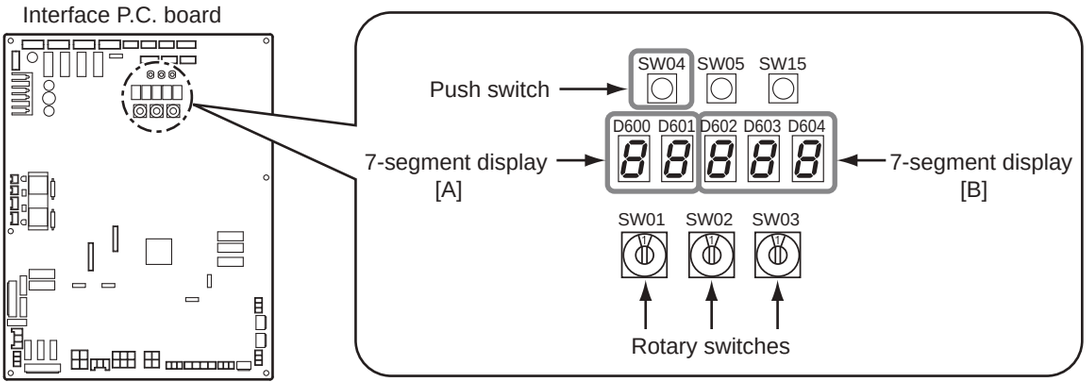

Checking Procedure to Be Followed in Event of Abnormal Shutdown

If the system is shut down due to an error in the outdoor unit, perform checks in the following steps:

1 **Open the panel of the outdoor unit and inspection window of the electric parts box, and check the 7-segment display.**

The check code is displayed in the right-hand section of the 7-segment display [B].

[U1] [OOO] ([OOO]: Check code)

* To check the check code, set the rotary switches SW01/SW02/SW03 to [1/1/1].
If there is a sub-code, the display alternates between the check code [OOO] (3 seconds) and the sub-code [OOO] (1 second).

2 **Check the check code and follow the applicable diagnostic procedure.**

3 **If the 7-segment display shows [U1] [E28], there is an error in a follower unit.**

Press the push-switch SW04 on the header unit and hold for several seconds.

As the fan of the outdoor unit in which the error has occurred comes on, open the panel of the unit, and check the check code shown on the 7-segment display.

4 **Perform checks in accordance with the diagnostic procedure applicable to the check code.**

(1) Display of System Information (Displayed on Header Outdoor Unit Only)

SW01	SW02	SW03	Display detail				
1	1	3	–	–			
	2		System capacity	A	[…8]~[64]:8 to 64 HP		
				B	[HP]		
	3		No. of outdoor units	A	[…1]~[…3]:1 to 3		
				B	[…P]		
	4		No. of indoor units connected / No. of units with cooling thermostat ON	A	[…0.]~[64.]:0 to 64 (No. of units connected)		
				B	[C…0]~[C64]:0 to 64 (No. of units with cooling thermostat ON)		
	5		No. of indoor units connected / No. of units with heating thermostat ON	A	[…0.]~[64.]:0 to 64 (No. of units connected)		
				B	[H…0]~[H64]:0 to 64 (No. of units with heating thermostat ON)		
	6		Amount of compressor command correction	A	Value displayed in hexadecimal format		
				B			
	7		Release control	A	Normal: [r. …], During release control: [r.1]		
				B	–		
	8		Oil equalization control	Normal: [oiL-0]			
				During oil equalization control: [oiL-1]			
	9		Oil equalization request	A	Displayed through LED segment lighting pattern		
				B	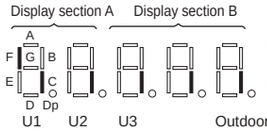 If element F shown on sketch at left turned on: Header unit oil equalization request If element C shown on sketch at left turned on: Follower unit oil equalization request		
	10		Refrigerant/oil recovery operation	A	Oil recovery in cooling: [C1], Normal: [C …]		
				B	Refrigerant recovery in heating: [H1], Normal: [H …]		
	11		Automatic addressing	A	[Ad]		
				B	During automatic addressing: [… FF], Normal: [… … …]		
	12		Power peak-cut	A	[dU]		
				B	Normal: [… … …], During 50-90% capacity operation: [_50-_90] While control is based on BUS line input: [E50-E90]		
	13		Optional control (P.C. board input)	Displays optional control status		A	B
				Operation mode selection: During priority heating (normal)		h.∗.	∗.∗.∗.
					Priority cooling	c.∗.	∗.∗.∗.
					Heating only	H.∗.	∗.∗.∗.
					Cooling only	C.∗.	∗.∗.∗.
					Priority given to No. of indoor units in operation	n.∗.	∗.∗.∗.
					Priority given to specific indoor unit	U.∗.	∗.∗.∗.
				External master ON/OFF: Normal		∗.....	∗.∗.∗.
					Start input	∗.1.	∗.∗.∗.
					Stop input	∗.0.	∗.∗.∗.
				Night operation: Normal		∗.∗.	....∗.∗.
					Start input	∗.∗.	1.∗.∗.
				Snowfall operation: Normal		∗.∗.	∗.....∗.
					Start input	∗.∗.	∗.1.∗.
	14		Optional control (BUS line input)	Same as above			
	15		–		–		
	16		–		–		

(2) Display of Outdoor Unit Information (Displayed on Each Outdoor Unit)

SW01	SW02	SW03	Display detail				
1	1	1	Error data	A	Outdoor unit No.: [U1] to [U3]		
				B	Check code (only latest one displayed) If there is no check code, [– – –] is displayed. If there is sub-code, check code [∗ ∗ ∗] and sub-code [– ∗ ∗] are displayed alternately, for 3 seconds and 1 second, respectively.		
			<SW04> push SW function: Fan operation at outdoor unit with error. 7-segment display section A: [E.1] <SW04 + SW05> push SW function: Fan operation at outdoor unit without error. 7-segment display section A: [E.0] <SW05> push SW function: Fan operation function check mode is cancelled.				
	2		–	A	–		
				B	–		
	3		Operation mode	A	Stop [… …] Normal cooling: [… C], Normal heating: [… H], Normal defrosting: [… J]		
				B	–		
	4		Outdoor unit HP capacity	A	8HP: [… 8], 10HP: [… 10], 12HP: [… 12], 14HP: [14], 16HP: [16], 18HP: [18], 20HP: [20], 22HP: [22]		
				B	[…HP]		
	5		Compressor operation command * Operation data of each compressor is displayed in turn in 2 second intervals.				
			Normal: Compressor speed (rps) is displayed in decimal format. 7-segment display (A/B): [C1. ... ...] ⇒ [... ∗ ∗ ∗, ∗] ⇒ [C2. ... ...] ⇒ [... ∗ ∗ ∗, ∗]				
			<SW04> push SW function: Switches to display of operating current (decimal value). 7-segment display (A/B): [i1.∗ ∗ ∗] ⇒ [i2.∗ ∗ ∗] Pressing of <SW05> restores normal display.				
	6		Outdoor fan mode	A	[FP]		
				B	Mode 0 to 63: [… 0] to [63]		
	7		Compressor backup	A	[C.b.]		
				B	Displays compressor backup setting status Normal: [… … …] Compressor No. 1 backup: [1 … …] Compressor No. 2 backup: [… 1 …]		
	8		–	A	–		
				B	–		
	9		Control valve output data	Displays control output status of solenoid valve		A	B
				4-way valve: ON		H. 1	… … …
				4-way valve: OFF		H. 0	… … …
	10			SV2: ON / SV51: OFF / SV52: OFF		2. …	1 0 0
				SV2: OFF / SV51: ON / SV52: ON		2. …	0 1 0
				SV2: OFF / SV51: OFF / SV52: ON		2. …	0 0 1
	11			SV3A: ON / SV3B: OFF / SV3C: OFF / SV3D: OFF		3. 1	0 0 0
				SV3A: OFF / SV3B: ON / SV3C: OFF / SV3D: OFF		3. 0	1 0 0
				SV3A: OFF / SV3B: OFF / SV3C: ON / SV3D: OFF		3. 0	0 1 0
				SV3A: OFF / SV3B: OFF / SV3C: OFF / SV3D: ON		3. 0	0 0 1
	12			SV41: ON / SV42: OFF		4. …	1 0 0
				SV41: OFF / SV42: ON		4. …	0 1 0
	14		PMV1/PMV3 opening	Displays opening data in decimal format. "Press <SW04>, then PMV1 display switches to PMV3 display."	PMV1	∗ ∗	∗ ∗. P
					PMV3	… ∗	∗ ∗. P
	15		PMV4 opening	Displays opening data in decimal format.	PMV4	… ∗	∗ ∗. P
	16		Oil level judgment status				
			Normal	A	[o L.]		
				B	Initial display: [… … …], Oil level judgment result: [#.∗.$] Displayed letters #, ∗ and $ represent judgment results for compressor Nos. 1 and 2, respectively (“0” for normal and “1” or “2” for low level).		
			<SW04> push SW function: Displays low level confirmed judgment result of each compressor.				
			* Pressing of <SW05> restores normal display.	A	[L d.]		
				B	Compressor No. 1 low level being confirmed: [L … …] Compressor No. 2 low level being confirmed: [… L …]		

(3) Display of Outdoor Cycle Data (Displayed at Each Outdoor Unit)

SW01	SW02	SW03	Display detail				
1	1	2	Pd pressure data	Pd pressure (MPaG) is displayed in decimal format. (MPaG: Approx. 10 times magnitude of kg/cm2G)		A	B
						P d.	∗. ∗ ∗
	2		Ps pressure data	Ps pressure (MPaG) is displayed in decimal format.		P s.	∗. ∗ ∗
	3		PL pressure conversion data	Converted PL pressure (MPaG) is displayed in decimal format.		P L.	∗. ∗ ∗
	4		TD1 sensor data	Temperature sensor reading (°C) is displayed in decimal format. • Letter symbol and data are displayed alternately, for 1 second and display for 3 seconds, respectively. • Data is displayed in [∗]. • Data with negative value is displayed as [– ∗].	Letter symbol	t d	1 ... ...
					Data	∗	∗. ∗ ∗
	5		TD2 sensor data		Letter symbol	t d	2 ... ...
					Data	∗	∗. ∗ ∗
	7		TS1 sensor data		Letter symbol	t S	1 ... ...
					Data	∗	∗. ∗ ∗
	9		TS3 sensor data		Letter symbol	t S	3 ... ...
					Data	∗	∗. ∗ ∗
	10		TE1 sensor data		Letter symbol	t E	1 ... ...
					Data	∗	∗. ∗ ∗
	11		TE2 sensor data		Letter symbol	t E	2 ... ...
					Data	∗	∗. ∗ ∗
	13		TL1 sensor data		Letter symbol	t L	1 ... ...
					Data	∗	∗. ∗ ∗
	14		TL2 sensor data		Letter symbol	t L	2 ... ...
					Data	∗	∗. ∗ ∗
	15		TL3 sensor data		Letter symbol	t L	3 ... ...
					Data	∗	∗. ∗ ∗
	16		TO sensor data		Letter symbol	t o	... ...
					Data	∗	∗. ∗ ∗

SW01	SW02	SW03	Display detail				
1	1	5	TK1 sensor data	Temperature sensor reading (°C) is displayed in decimal format.	Letter symbol	F 1	... ...
					Data	∗	∗. ∗ ∗
	2		TK2 sensor data		Letter symbol	F 2	... ...
					Data	∗	∗. ∗ ∗
	4		TK4 sensor data		Letter symbol	F 4	... ...
					Data	∗	∗. ∗ ∗
	5		TK5 sensor data		Letter symbol	F 5	... ...
					Data	∗	∗. ∗ ∗
	6		TG1 sensor data		Letter symbol	t G	1 ... ...
					Data	∗	∗. ∗ ∗
	7		TG2 sensor data		Letter symbol	t G	2 ... ...
					Data	∗	∗. ∗ ∗

(4) Display of Outdoor Cycle Data (Displayed at Header Unit)

* This method is used when displaying follower unit information on the 7-segment display of the header unit.

SW01	SW02	SW03	Display detail		
3	1	1~3	Error data	A	[U.∗], ∗: SW03 setting No. + 1 (Outdoor unit No. U2 to U3)
				B	Check code is displayed (latest one only). If there is no check code: [– – –].
	2		Type of compressor installed	A	[U.∗], ∗: SW03 setting No. + 1 (Outdoor unit No. U2 to U3)
				B	
	3		Outdoor unit HP capacity	A	[U.∗], ∗: SW03 setting No. + 1 (Outdoor unit No. U2 to U3)
				B	8HP: [… 8], 10HP: [… 10], 12HP: [… 12], 14HP: [14], 16HP: [16], 18HP: [18], 20HP: [20], 22HP: [22]
	4		Compressor operation command	A	[U.∗], ∗: SW03 setting No. + 1 (Outdoor unit No. U2 to U3)
				B	Indicates which compressor is ON. ∗ Any unconnected compressors is represented by "–". B When compressor No. 1 is ON 1 0 When compressor No. 2 is ON 0 1
	5		Fan operation mode	A	[U.∗], ∗: SW03 setting No. + 1 (Outdoor unit No. U2 to U3)
				B	At rest: [F … 0], In mode 63: [F 6 3]
	6		Release signal	A	[U.∗], ∗: SW03 setting No. + 1 (Outdoor unit No. U2 to U3)
				B	Normal: [r … …], Upon receiving release signal: [r … 1]
	7		Oil level judgment	A	[U.∗], ∗: SW03 setting No. + 1 (Outdoor unit No. U2 to U3)
				B	Normal: [… … …], Low level: [… … L]
	8		Compressor 1 operating current	A	[U.∗], ∗: SW03 setting No. + 1 (Outdoor unit No. U2 to U3)
				B	[∗∗.∗], ∗∗.∗ is value of operating current in decimal format.
	9		Compressor 2 operating current	A	[U.∗], ∗: SW03 setting No. + 1 (Outdoor unit No. U2 to U3)
				B	[∗∗.∗], ∗∗.∗ is value of operating current in decimal format.

Note: Follower unit is selected by setting SW03.

SW03	7-segment display section A
1	U2
2	U3

(5) Display of Indoor Unit Information (Displayed on Header Unit Only)

SW01	SW02	SW03	Display detail		
4	1~16	1~4	Indoor BUS communication signal receiving status	B	Upon receiving signal: [... ... 1], Other times: [... ... ...]
5			Indoor check code	B	No check code: [– – –]
6			Indoor HP capacity	B	0. 2, 0. 5, 0. 8, ... 1, 1. 2, 1. 7, ... 2, 2. 5, ...3, 3. 2, ...4, ...5, ...6, ...8, 1 0, 1 6, 2 0
7			Indoor request command (S code, operation mode)	B	[#. ... ∗] # represents mode: COOL: [C. ... ∗], HEAT: [H. ... ∗] FAN: [F. ... ∗], OFF: [S. ... ∗] ∗ represents S code: [#. ... 0] to [#. ... F]
8			Indoor PMV opening data	B	Displayed in decimal format
9			Indoor TA / TRA opening data	B	Displayed in decimal format
		11~14	Indoor TSA opening data	B	Displayed in decimal format
10		1~4	Indoor TF / TFA opening data	B	Displayed in decimal format
		11~14	Indoor TOA opening data	B	Displayed in decimal format
11		1~4	Indoor TCJ opening data	B	Displayed in decimal format
12			Indoor TC1 opening data	B	Displayed in decimal format
13			Indoor TC2 opening data	B	Displayed in decimal format

Note: Indoor address No. is selected by setting SW02 and SW03 and displayed on 7-segment display, section A.

SW02	SW03	Indoor address	7-segment display section A
1~16	1	SW02 setting number	[01]~[16]
	11		
	2	SW02 setting number +16	[17]~[32]
	12		
	3	SW02 setting number +32	[33]~[48]
	13		
	4	SW02 setting number +48	[49]~[64]
	14		

(6) Display of Outdoor EEPROM Writing Error Code (Displayed on Header Unit Only)

* The latest error code written in the EEPROM of each outdoor unit is displayed.
(This function is used to check the error code after the resetting of the power supply.)

To display the error code, push SW04 and hold for at least 5 seconds after setting SW01 to 03 as shown in the table below.

SW01	SW02	SW03	Indoor address	7-segment display section A	
1	1	16	Latest error code of header unit (U1)	E. 1.	∗∗∗
	2		Latest error code of follower unit No. 1 (U2)	E. 2.	∗∗∗
	3		Latest error code of follower unit No. 2 (U3)	E. 3.	∗∗∗

- 7-Segment Display

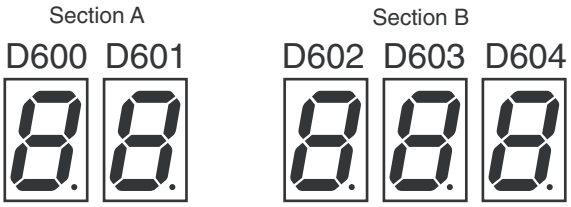

Set SW01/SW02/SW03 to [1/1/16] and push SW04 and hold for at least 5 seconds. The latest error code of the header unit (U1) will be displayed.
If the setting of SW02 is changed, the latest error code of a follow unit (U2-U3) will be displayed.

8-7. Oil Level Judgment Display

The current compressor oil level judgment results can be accessed by setting the switches provided on the interface P.C. board of an outdoor unit.
Perform the checks in accordance with the procedure described below.

1 Operation Procedure

(1) Start the operation.

(2) Set the switches provided on the interface P.C. board of the outdoor unit for which oil level judgment results are required as follows:
SW01/SW02/SW03 = 1/16/1

(3) The oil level judgment result will be displayed on the 7-segment display.
7-segment display: [oL] [#. ∗.$]
The letters #, ∗ and $ are digits that represent judgment results for compressor Nos. 1 and 2, respectively.
(See the table below for the interpretation of the judgment results.)

(4) When checking is completed, revert the SW01/SW02/SW03 setting to [1/1/1].

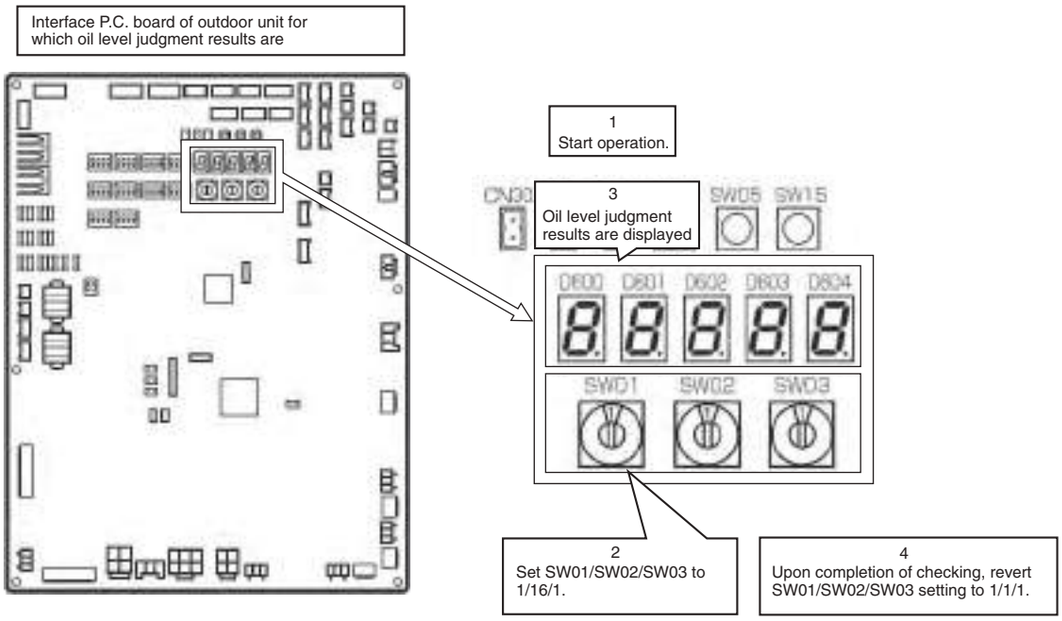

2 Oil Level Judgment Results

Displayed digit	Judgment result	Description
O	Normal	The amount of oil in the compressor is sufficient.
1 2	Low level	The amount of oil in the compressor is insufficient. (Both “1” and “2” stand for insufficiency.) If this result persists, the system will turn itself off in a protective shutdown.

Display example

7-segment display	[oL]	[0 0]	Oil level is normal for compressors 1 and 2.
	[oL]	[2 2]	Oil level is low for compressors 1 and 2.
	[oL]	[0 2]	Oil level is low for compressor 2 and normal for compressors 1.

Judgment result for compressor 2
Judgment result for compressor 1

8-8. SMMS-e Outdoor Interface P.C. Board Function Setting Exchange Table

1. Switch/Function Setting Exchange

Part type		Exchange contents			Initial setting at shipment
SW06	DIP SW 4 bit	bit 1	Compressor 1 backup	OFF: Normal, ON: Backup when compressor 1 was in trouble	OFF
		bit 2	Compressor 2 backup	OFF: Normal, ON: Backup when compressor 2 was in trouble	OFF
		All bit1 and 2 are ON: Setup of outdoor unit backup			OFF
SW07	DIP SW 4 bit	bit 1	Demand control 1 (Standard specifications) Exchange of upper limit regulation	OFF: 0 to 100% ON : Middle to 100%	OFF
		bit 2	Demand control 2 (Expansion function) Exchange of 2 steps to 4 steps of upper limit	OFF: 2 steps (Standard) ON : 4 steps	OFF
SW09	DIP SW 4 bit	In case of center outdoor unit			
		bit 2	Indoor connection capacity over Judgment of error	OFF: Error judgment ON : None (when backup setting for outdoor unit)	OFF
		bit 4	Judgment of error for No. of connected indoor units	OFF: No error judgment ON : Error judgment	OFF
		In case of terminal outdoor unit			
		bit 4	Exchange of Outdoor unit No. / Start order No.	OFF: Outdoor unit No. [U. #] (#: 1 to 3) ON : Outdoor start order No. [y. #] (#: 1 to 3)	OFF
SW10	DIP SW 4 bit	bit 2	Outdoor fan high static pressure operation	OFF: Normal ON : High static pressure operation	OFF
		bit 3	For low noise operation	OFF: Normal ON : INV frequency upper limit restriction	OFF
		bit 4		OFF: Normal ON : Fan rpm upper limit restriction	OFF
SW11	DIP SW 4 bit	bit 4	Operation switching when indoor water overflow error detected	OFF: Entire system stops ON : System operation continues (Room which trouble occurred only stops.)	OFF
SW12	DIP SW 4 bit	bit 1	Selection of PMV open/close or manual operation	(According to the following setting contents)	OFF
		bit 2			OFF
			bit 1 / bit 2		
			OFF / OFF	PMV1 opens/closes by operation of CN30/CN31 (*1)	
			ON / OFF	PMV3 opens/closes by operation of CN30/CN31 (*1)	
			OFF / ON	PMV4 opens/closes by operation of CN30/CN31 (*1)	
SW13	DIP SW 4 bit	bit 4	Line address setup	(Used by combining with SW14)	OFF
SW14	DIP SW 4 bit	bit 1	Line address setup		OFF
		bit 2			OFF
		bit 3			OFF
		bit 4			OFF
SW16	DIP SW 4 bit	bit 1	Option function Output exchange of external output P.C. boa	(According to the following setting contents)	OFF
		bit 2			OFF
			bit 1 / bit 2		
			OFF / OFF	Compressor operation output	
			ON / OFF	Display of system operation ratio	
SW30	DIP SW 2 bit	bit 1	Communication termination resistance between outdoor units	OFF: No termination resistance ON : With termination resistance	ON
		bit 2	Communication termination resistance between indoor and outdoor units	OFF: No termination resistance ON : With termination resistance	ON
CN30	Check connector	Manual full opening operation for PMV opening operation		When released: Normal, When short-circuited: Open fully (2 minutes)	Released
CN31	Check connector	Manual full closing operation for PMV opening operation		When released: Normal, When short-circuited: Closed fully (2 minutes)	Released

*1 PMV full open/full close operation by short-circuited CN30/CN31 is for PMV which was selected by setting of SW12.

2. Switching of Jumper Wire/Function

Setup Function switching setup

○ : With jumper, × : Without jumper (Cut)

jumper	Part type	Exchange contents		Initial setting at shipment
J01	Optional function Operation mode selection operation switching	○	Indoor unit at not selected side is kept with waiting status.	○
		×	The mode is changed a mode which selected the operation mode of the indoor unit at not selected side.	
J04	Upper limit setup of demand capacity command in corresponding indoor during saving operation in indoor	○	Approx. 75% (Normal)	○
		×	Approx. 60%	
J16	Demand control 1 (Standard specification) Corresponds to 2-core wire	○	Normal (3-core wire <Successive MAKE signal> or 4-core wire <Successive MAKE or Pulse signal>)	○
		×	2-core wire <Successive MAKE signal>	

*4 When you replace the board with a service board, be sure to cut the jumper wire matching with the outdoor unit model to be installed. (The jumper wires J09 to J12 which were mounted at shipment from the factory are provided to all the boards regardless of model type.)

Interface Board Switches and jumper wire positions to be used in the Function setup switching table

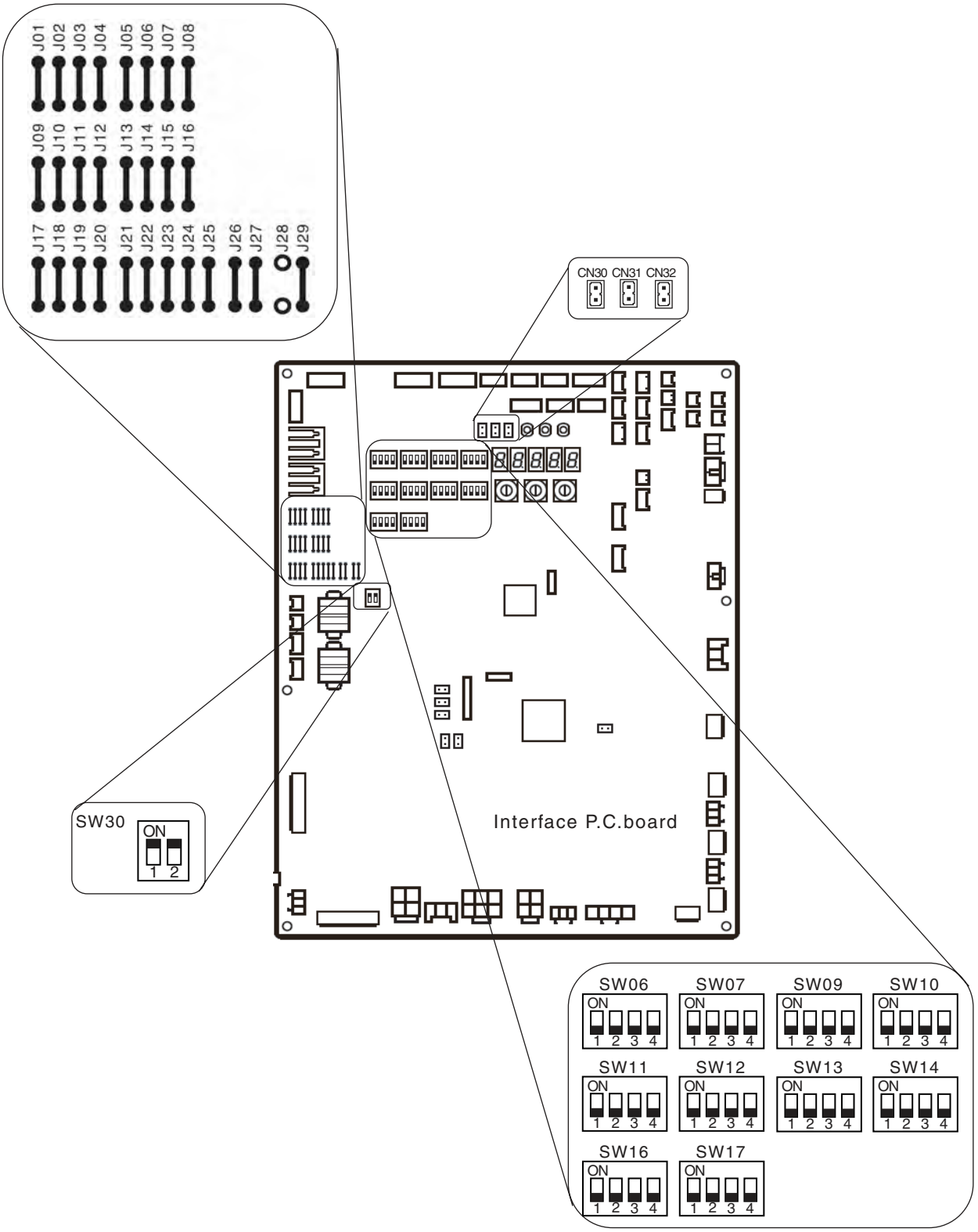

8-9. Leakage/Clogging of Refrigerating Cycle Circuit

List of Check Codes Generated upon Occurrence of Leakage/Clogging in Outdoor Cycle or Oil Circuit Part (MMY-MAP0806∗, 1006∗, 1206∗, 14B6∗)

Clogging

Part	Location of problem (see next page)	Unit generating check code	Detected fault and check code		Symptom
Outdoor PMV1	A	Corresponding unit	Activation of high-pressure protection Activation of low-pressure protection Discharge temp. error (TD1) Discharge temp. error (TD2)	P20 H06 P03 P17	Rise of pressure Fall of pressure Rise of discharge temp. (compressor 1) Rise of discharge temp. (compressor 2)
Check valve in discharge pipe convergent section	B	Corresponding unit	High-pressure protection error High-pressure SW system error	P20 P04-XX	Abnormal rise of pressure
Check valve in discharge pipe	C	Corresponding unit	High-pressure SW system error	P04-XX	Abnormal rise of pressure
Check valve in oil-equalization circuit Capillary Strainer	D	Corresponding unit	Oil level detection circuit error Oil level low detection and protection	H16-XX H07	Oil circuit error or oil level low
SV3A valve	E	Other connected unit	Oil level low detection and protection	H07	Oil level low
SV3B valve	F	Corresponding unit	Oil level low detection and protection	H07	Oil level low
SV3C valve	G	Other connected unit	Oil level low detection and protection	H07	Oil level low
SV3D valve SV3D valve circuit capillary Strainer	H	Corresponding unit	Oil level low detection and protection	H07	Oil level low
Reducer	I	Corresponding unit	Oil level detection circuit error Oil level low detection and protection	H16-05 H07	Oil circuit error Oil level low Oil level low
Oil return distributor	J	Corresponding unit	Oil level low detection and protection	H07	Oil level low
SV3C bypass capillary	K	Corresponding unit	Oil level detection circuit error	H16-04	Oil circuit error

Leakage

Part	Location of problem (see next page)	Unit generating check code	Detected fault and check code		Symptom
Outdoor PMV1	A	Corresponding unit	Outdoor liquid backflow error Oil level low detection and protection	P13 H07	Refrigerant entrapment
		Other connected unit	Discharge temp. error (TD1) Discharge temp. error (TD2)	P03 P17	Rise of discharge temp. (compressor 1) Rise of discharge temp. (compressor 2)
Check valve in discharge pipe convergent section	B	Corresponding unit	Oil level low detection and protection Compressor breakdown Compressor error (lockup)	H07 H01-XX H02-XX	Refrigerant entrapment
Check valve in discharge pipe	C	Corresponding unit	Oil level low detection and protection Compressor breakdown Compressor error (lockup)	H07 H01-XX H02-XX	Refrigerant entrapment
Check valve in oil-equalization circuit	D	Corresponding unit	Oil level low detection and protection	H07	Excessive amount of oil (Leaking side) Insufficient amount of oil (Normal side)
SV3A valve	E	Corresponding unit	Oil level low detection and protection	H07	Oil level low
SV3C valve	G	Corresponding unit	Oil level low detection and protection	H07	Oil level low

Note: “XX” represents sub-code

Outdoor unit (8, 10, 12, 14HP)
Model : MMY-MAP0806∗ ,1006∗, 1206∗, 14B6∗

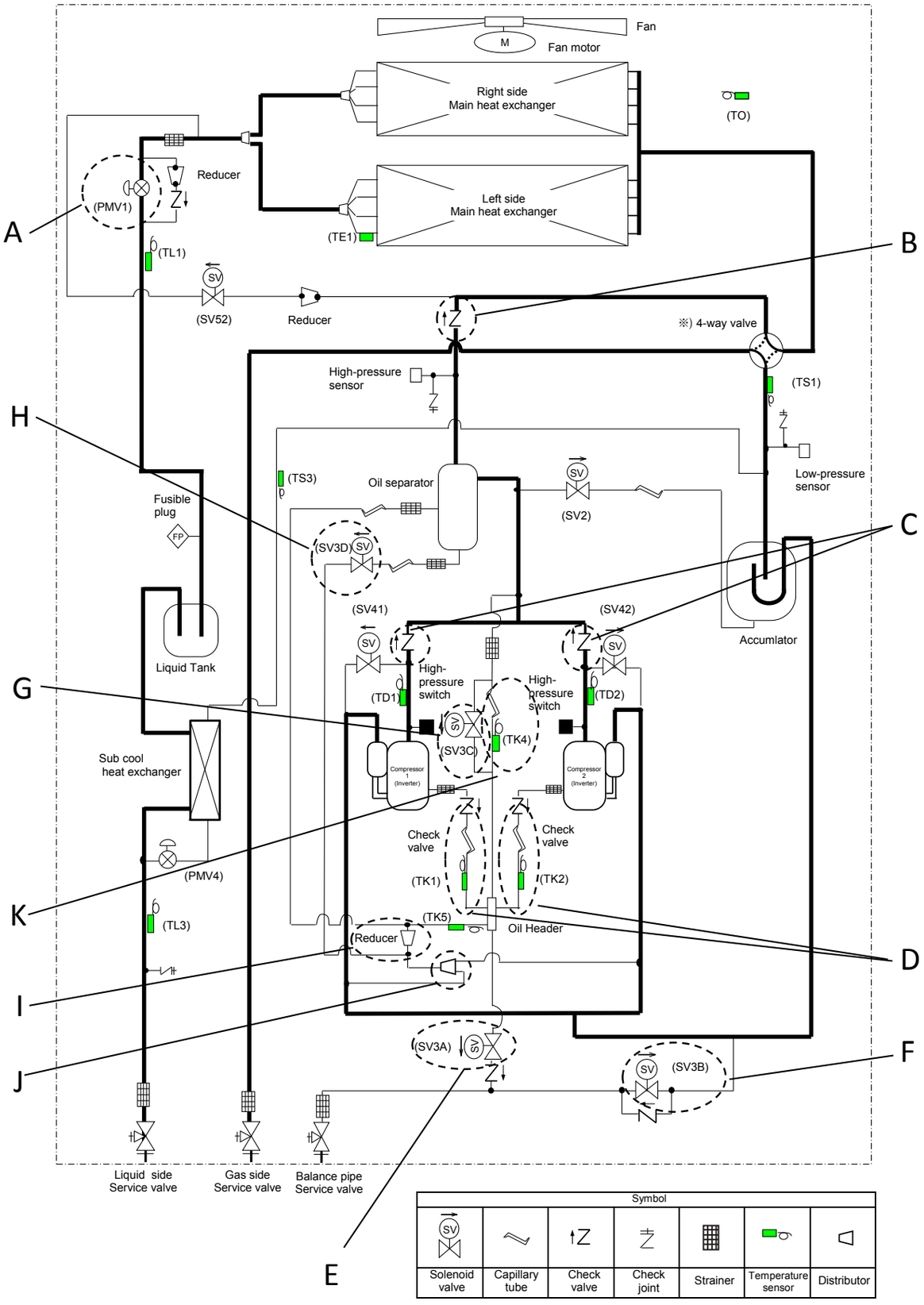

Symbol						
Solenoid valve	Capillary tube	Check valve	Check joint	Strainer	Temperature sensor	Distributor

※) C/O models don't have 4-way valve and coil.
However, MMY-MAP**06T8(J)P-E models don't have only 4-way coil.

List of Check Codes Generated upon Occurrence of Leakage/Clogging in Outdoor Cycle or Oil Circuit Part (MMY-MAP1406∗, 1606∗, 18B6∗)

Clogging

Part	Location of problem (see next page)	Unit generating check code	Detected fault and check code		Symptom
Outdoor PMV1, 3	A	Corresponding unit	Activation of high-pressure protection Activation of low-pressure protection Discharge temp. error (TD1) Discharge temp. error (TD2)	P20 H06 P03 P17	Rise of pressure Fall of pressure Rise of discharge temp. (compressor 1) Rise of discharge temp. (compressor 2)
Check valve in discharge pipe convergent section	B	Corresponding unit	High-pressure protection error High-pressure SW system error	P20 P04-XX	Abnormal rise of pressure
Check valve in discharge pipe	C	Corresponding unit	High-pressure SW system error	P04-XX	Abnormal rise of pressure
Check valve in oil-equalization circuit Capillary Strainer	D	Corresponding unit	Oil level detection circuit error Oil level low detection and protection	H16-XX H07	Oil circuit error or oil level low
SV3A valve	E	Other connected unit	Oil level low detection and protection	H07	Oil level low
SV3B valve	F	Corresponding unit	Oil level low detection and protection	H07	Oil level low
SV3C valve	G	Other connected unit	Oil level low detection and protection	H07	Oil level low
SV3D valve SV3D valve circuit capillary Strainer	H	Corresponding unit	Oil level low detection and protection	H07	Oil level low
Reducer	I	Corresponding unit	Oil level detection circuit error Oil level low detection and protection	H16-05 H07	Oil circuit error Oil level low Oil level low
Oil return distributor	K	Corresponding unit	Oil level low detection and protection	H07	Oil level low
SV3C bypass capillary	L	Corresponding unit	Oil level detection circuit error	H16-04	Oil circuit error

Leakage

Part	Location of problem (see next page)	Unit generating check code	Detected fault and check code		Symptom
Outdoor PMV1	A	Corresponding unit	Outdoor liquid backflow error Oil level low detection and protection	P13 H07	Refrigerant entrapment
		Other connected unit	Discharge temp. error (TD1) Discharge temp. error (TD2)	P03 P17	Rise of discharge temp. (compressor 1) Rise of discharge temp. (compressor 2)
Check valve in discharge pipe convergent section	B	Corresponding unit	Oil level low detection and protection Compressor breakdown Compressor error (lockup)	H07 H01-XX H02-XX	Refrigerant entrapment
Check valve in discharge pipe	C	Corresponding unit	Oil level low detection and protection Compressor breakdown Compressor error (lockup)	H07 H01-XX H02-XX	Refrigerant entrapment
Check valve in oil-equalization circuit	D	Corresponding unit	Oil level low detection and protection	H07	Excessive amount of oil (Leaking side) Insufficient amount of oil (Normal side)
SV3A valve	E	Corresponding unit	Oil level low detection and protection	H07	Oil level low
SV3C valve	G	Corresponding unit	Oil level low detection and protection	H07	Oil level low

Note: “XX” represents sub-code

Outdoor Unit (14, 16, 18HP)
Model: MMY-MAP1406∗, 1606∗, 18B6∗

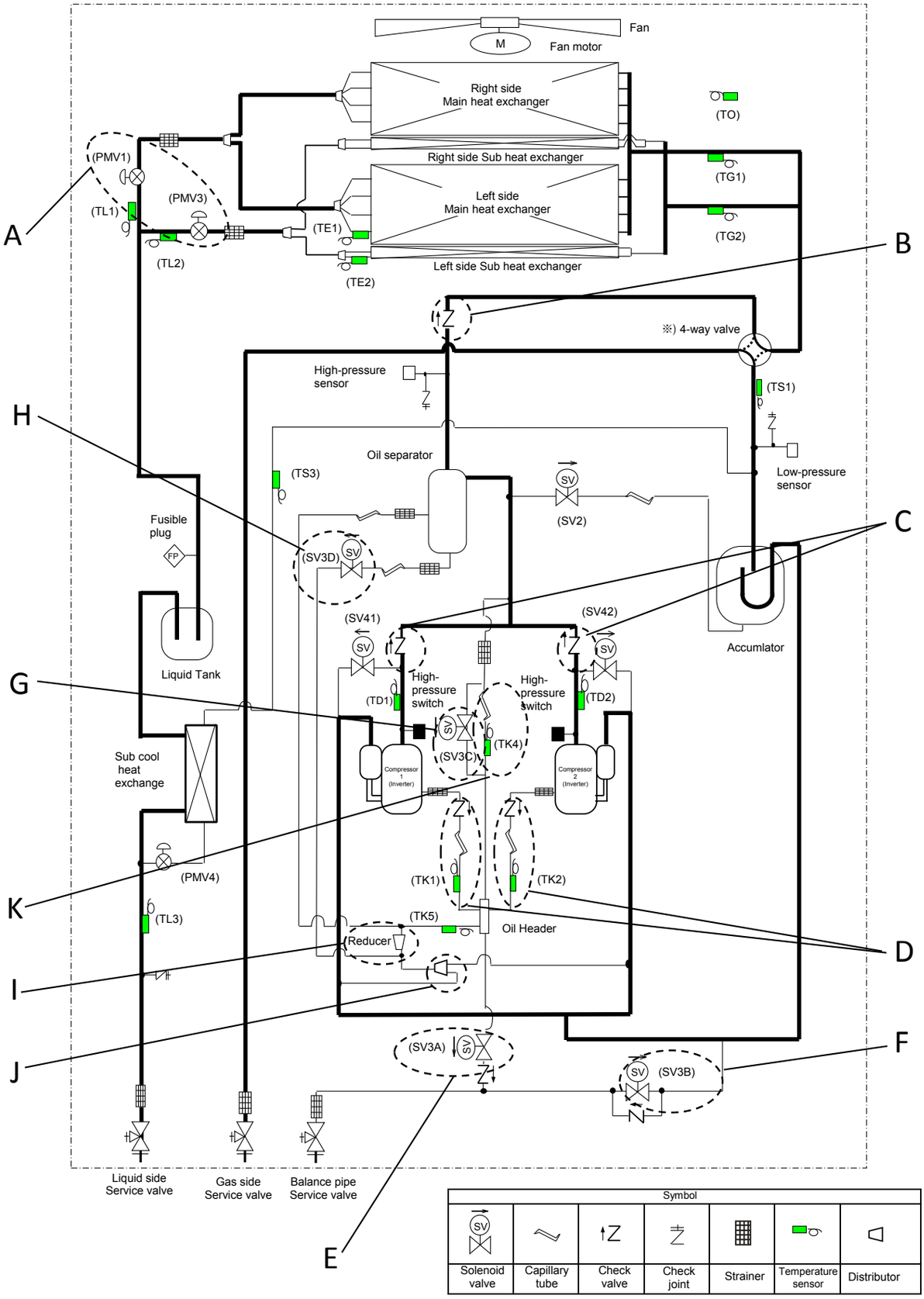

※) C/O models don't have 4-way valve and coil.
However, MMY-MAP**06T8(J)P-E models don't have only 4-way coil.

List of Check Codes Generated upon Occurrence of Leakage/Clogging in Outdoor Cycle or Oil Circuit Part (MMY-MAP1806∗, 2006∗ , 2206∗)

Clogging

Part	Location of problem (see next page)	Unit generating check code	Detected fault and check code		Symptom
Outdoor PMV1, 3	A	Corresponding unit	Activation of high-pressure protection Activation of low-pressure protection Discharge temp. error (TD1) Discharge temp. error (TD2)	P20 H06 P03 P17	Rise of pressure Fall of pressure Rise of discharge temp. (compressor 1) Rise of discharge temp. (compressor 2)
Check valve in discharge pipe convergent section	B	Corresponding unit	High-pressure protection error High-pressure SW system error	P20 P04-XX	Abnormal rise of pressure
Check valve in discharge pipe	C	Corresponding unit	High-pressure SW system error	P04-XX	Abnormal rise of pressure
Check valve in oil-equalization circuit Capillary Strainer	D	Corresponding unit	Oil level detection circuit error Oil level low detection and protection	H16-XX H07	Oil circuit error or oil level low
SV3A valve	E	Other connected unit	Oil level low detection and protection	H07	Oil level low
SV3B valve	F	Corresponding unit	Oil level low detection and protection	H07	Oil level low
SV3C valve	G	Other connected unit	Oil level low detection and protection	H07	Oil level low
SV3D valve SV3D valve circuit capillary Strainer	H	Corresponding unit	Oil level low detection and protection	H07	Oil level low
Reducer	I	Corresponding unit	Oil level detection circuit error Oil level low detection and protection	H16-05 H07	Oil circuit error Oil level low Oil level low
Oil return distributor	K	Corresponding unit	Oil level low detection and protection	H07	Oil level low
SV3C bypass capillary	L	Corresponding unit	Oil level detection circuit error	H16-04	Oil circuit error

Leakage

Part	Location of problem (see next page)	Unit generating check code	Detected fault and check code		Symptom
Outdoor PMV1	A	Corresponding unit	Outdoor liquid backflow error Oil level low detection and protection	P13 H07	Refrigerant entrapment
		Other connected unit	Discharge temp. error (TD1) Discharge temp. error (TD2)	P03 P17	Rise of discharge temp. (compressor 1) Rise of discharge temp. (compressor 2)
Check valve in discharge pipe convergent section	B	Corresponding unit	Oil level low detection and protection Compressor breakdown Compressor error (lockup)	H07 H01-XX H02-XX	Refrigerant entrapment
Check valve in discharge pipe	C	Corresponding unit	Oil level low detection and protection Compressor breakdown Compressor error (lockup)	H07 H01-XX H02-XX	Refrigerant entrapment
Check valve in oil-equalization circuit	D	Corresponding unit	Oil level low detection and protection	H07	Excessive amount of oil (Leaking side) Insufficient amount of oil (Normal side)
SV3A valve	E	Corresponding unit	Oil level low detection and protection	H07	Oil level low
SV3C valve	G	Corresponding unit	Oil level low detection and protection	H07	Oil level low

Note: “XX” represents sub-code

Outdoor Unit (18, 20, 22HP)
Model: MMY-MAP1806∗, 2006∗, 2206∗

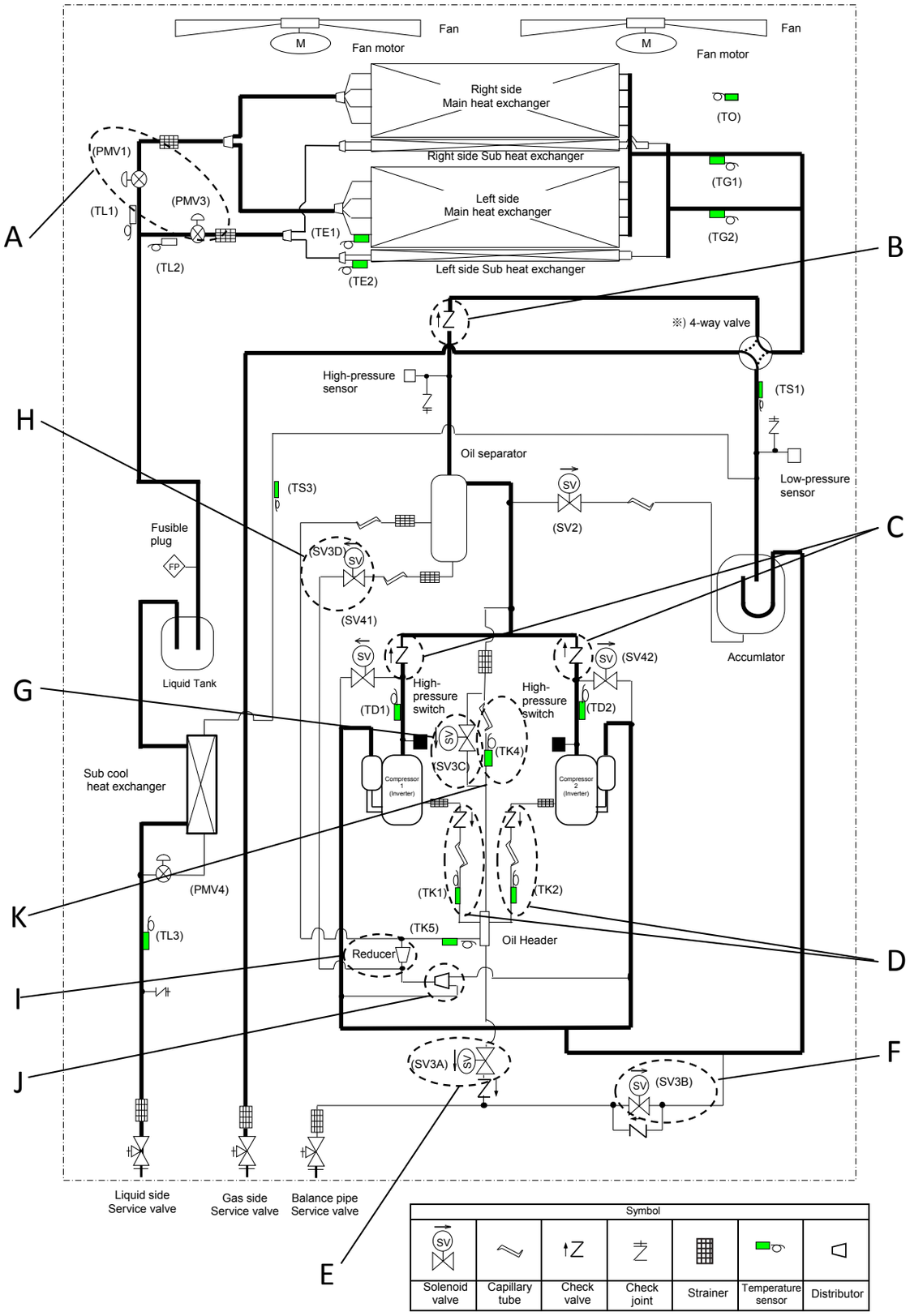

※) C/O models don't have 4-way valve and coil.
However, MMY-MAP**06T8(J)P-E models don't have only 4-way coil.

8-10. Sensor Characteristics

Outdoor Unit

▼Temperature sensor characteristics

Outdoor TS1, TS3, TE1, TE2, TL1, TL2, TL3 and TO sensors

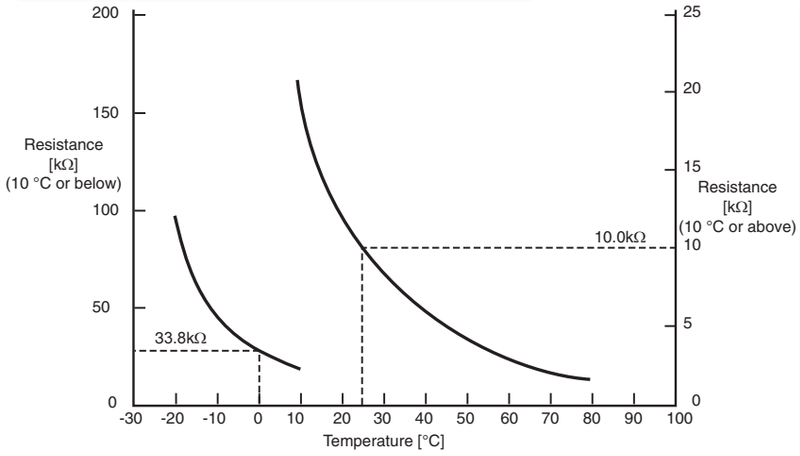

Temperature [°C]	Resistance [kΩ]
-20	102.9
-15	76.6
-10	57.8
-5	44.0
0	33.8
5	26.1
10	20.4
15	16.0
20	13.0
25	10.0
30	8.0
35	6.4
40	5.2
45	4.2
50	3.5
55	2.8
60	2.3
65	1.9
70	1.6
75	1.4
80	1.1

Outdoor TD1,TD2,TK1,TK2,TK4 and TK5 sensors

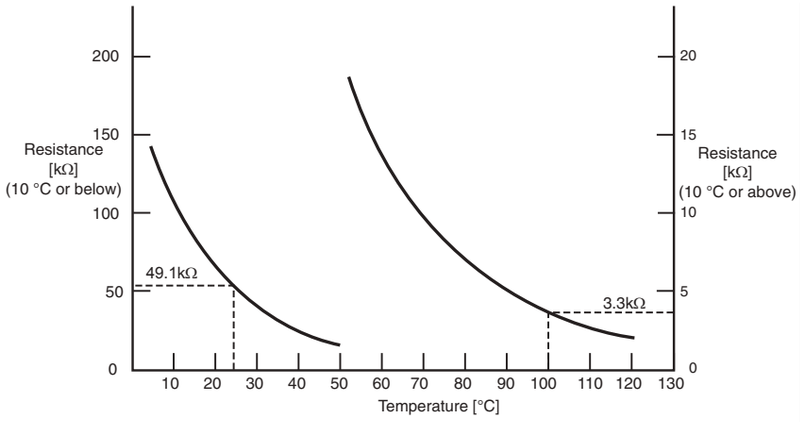

Temperature [°C]	Resistance [kΩ]
0	162.2
5	125.8
10	98.3
15	77.5
20	61.5
25	49.1
30	39.5
35	32.0
40	26.1
45	21.4
50	17.6
55	14.6
60	12.1
65	10.2
70	8.5
75	7.2
80	6.1
85	5.2
90	4.5
95	3.8
100	3.3
105	2.9
110	2.5
115	2.2
120	1.9

Outdoor TG1 and TG2 sensors

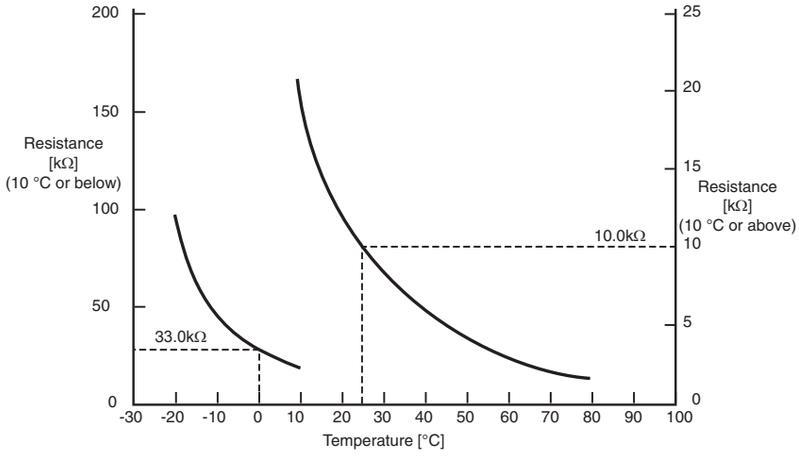

Temperature [°C]	Resistance [kΩ]
-20	98.9
-15	74.1
-10	56.1
-5	42.8
0	33.0
5	25.6
10	20.0
15	15.8
20	12.5
25	10.0
30	8.0
35	6.5
40	5.3
45	4.4
50	3.6
55	3.0
60	2.5
65	2.1
70	1.7
75	1.5
80	1.3

Outdoor Unit

▼Pressure sensor characteristics

- Input/output wiring summary

Pin No.	High pressure side (Pd)		Low pressure side (Ps)	
	Input/output name	Lead wire color	Input/output name	Lead wire color
1	OUTPUT	White	—	—
2	—	—	OUTPUT	White
3	GND	Black	GND	Black
4	+5V	Red	+5V	Red

- Output voltage vs. pressure

High pressure side (Pd)	Low pressure side (Ps)
0.5~4.5V 0~3.92MPa	0.5~3.5V 0~0.98MPa

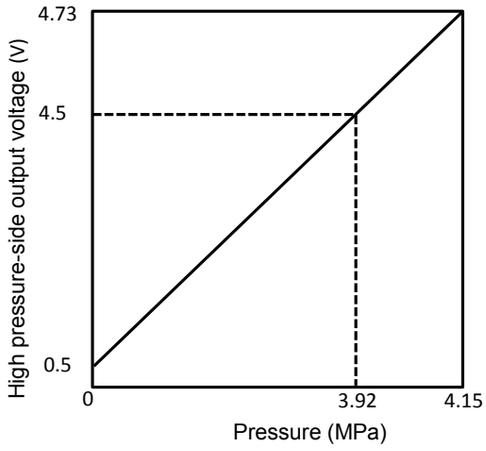

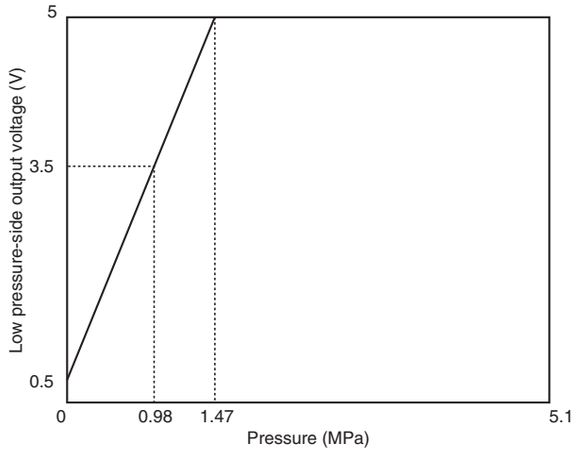

Indoor Unit

▼Temperature sensor characteristics

Indoor TA(TSA), TRA,TF(TFA) sensor

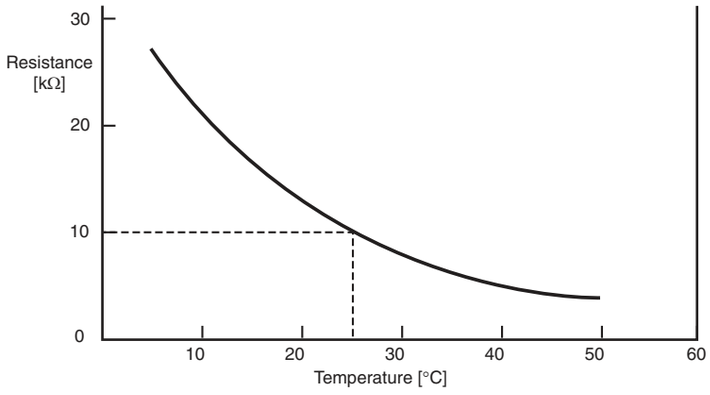

Temperature [°C]	Resistance [kΩ]
0	33.8
5	26.1
10	20.4
15	16.0
20	12.6
25	10.0
30	8.0
35	6.4
40	5.2
45	4.2
50	3.5
55	2.8
60	2.3

Indoor TC1 sensor

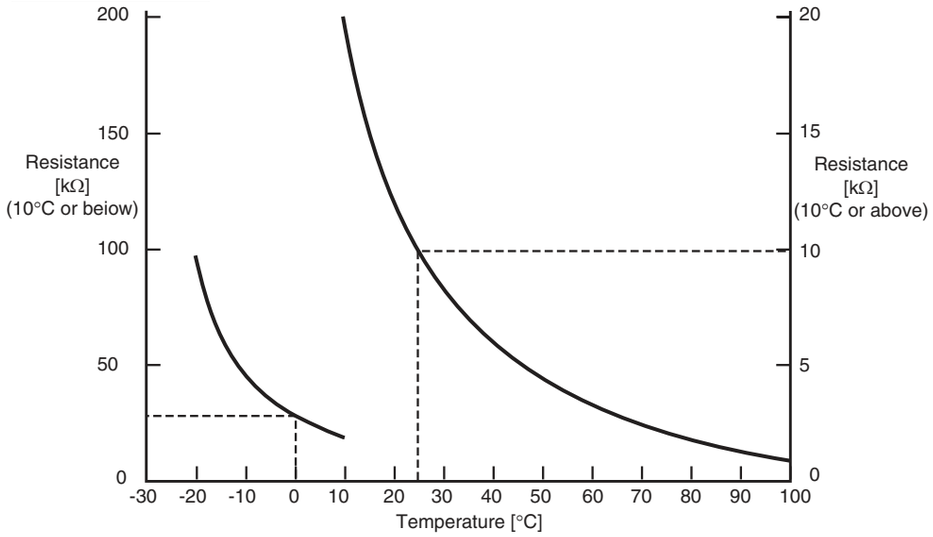

Temperature [°C]	Resistance [kΩ]
-20	98.3
-15	73.7
-10	55.8
-5	42.6
0	32.8
5	25.5
10	20.0
15	15.7
20	12.5
25	10.0
30	8.1
35	6.5
40	5.3
45	4.4
50	3.6
55	3.0
60	2.5
65	2.1
70	1.7
75	1.5
80	1.2
85	1.1
90	0.9
95	0.8
100	0.7

Indoor TC2 and TCJ, TOA sensor

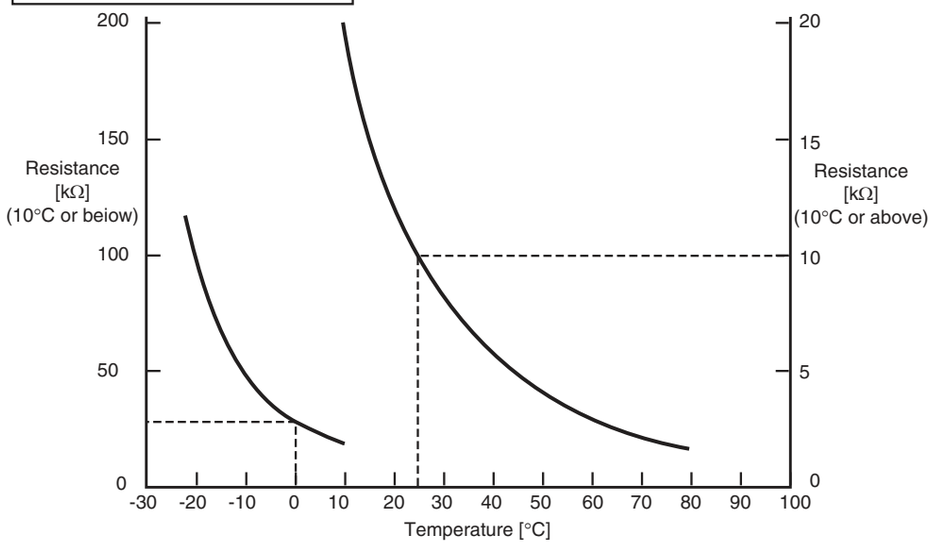

Temperature [°C]	Resistance [kΩ]
-20	102.9
-15	76.6
-10	57.7
-5	44.0
0	38.8
5	26.1
10	20.4
15	16.0
20	12.6
25	10.0
30	8.0
35	6.4
40	5.2
45	4.2
50	3.5
55	2.8
60	2.3
65	1.9
70	1.6
75	1.4
80	1.2

8-11. Pressure Sensor Output Check

Outdoor Unit

▼ Pd sensor characteristics

0 to 4.41 MPa (0.5 to 4.73V output for 0 to 4.15 MPa)
Voltage readings across pins 2 and 3 of CN501 on indoor unit main P.C. board (with negative-side probe of multimeter placed on pin 3)

VOLT	Pd (MPa)	Pd (kg/cm^2)	VOLT	Pd (MPa)	Pd (kg/cm^2)	VOLT	Pd (MPa)	Pd (kg/cm^2)	VOLT	Pd (MPa)	Pd (kg/cm^2)	VOLT	Pd (MPa)	Pd (kg/cm^2)
0.00	0.00	0.0	1.00	0.49	5.0	1.99	1.46	14.9	2.99	2.44	24.9	3.98	3.42	34.8
0.02	0.00	0.0	1.02	0.51	5.2	2.01	1.48	15.1	3.01	2.46	25.1	4.00	3.44	35.0
0.04	0.00	0.0	1.04	0.53	5.4	2.03	1.50	15.3	3.03	2.48	25.3	4.02	3.45	35.2
0.06	0.00	0.0	1.06	0.54	5.5	2.05	1.52	15.5	3.05	2.50	25.5	4.04	3.48	35.4
0.08	0.00	0.0	1.07	0.56	5.7	2.07	1.54	15.7	3.07	2.52	25.7	4.06	3.49	35.6
0.10	0.00	0.0	1.09	0.58	5.9	2.09	1.56	15.9	3.09	2.54	25.9	4.08	3.51	35.8
0.12	0.00	0.0	1.11	0.60	6.1	2.11	1.58	16.1	3.11	2.56	26.1	4.10	3.53	36.0
0.14	0.00	0.0	1.13	0.62	6.3	2.13	1.60	16.3	3.13	2.57	26.3	4.12	3.55	36.2
0.16	0.00	0.0	1.15	0.64	6.5	2.15	1.62	16.5	3.15	2.59	26.4	4.14	3.57	36.4
0.18	0.00	0.0	1.17	0.66	6.7	2.17	1.64	16.7	3.16	2.61	26.6	4.16	3.59	36.6
0.20	0.00	0.0	1.19	0.68	6.9	2.19	1.66	16.9	3.18	2.63	26.8	4.18	3.61	36.8
0.22	0.00	0.0	1.21	0.70	7.1	2.21	1.67	17.1	3.20	2.65	27.0	4.20	3.63	37.0
0.23	0.00	0.0	1.23	0.72	7.3	2.23	1.69	17.3	3.22	2.67	27.2	4.22	3.65	37.2
0.25	0.00	0.0	1.25	0.74	7.5	2.25	1.71	17.5	3.24	2.69	27.4	4.24	3.67	37.4
0.27	0.00	0.0	1.27	0.76	7.7	2.27	1.73	17.7	3.26	2.71	27.6	4.26	3.69	37.6
0.29	0.00	0.0	1.29	0.77	7.9	2.29	1.75	17.9	3.28	2.73	27.8	4.28	3.70	37.8
0.31	0.00	0.0	1.31	0.79	8.1	2.31	1.77	18.0	3.30	2.75	28.0	4.30	3.72	38.0
0.33	0.00	0.0	1.33	0.81	8.3	2.32	1.79	18.2	3.32	2.77	28.2	4.32	3.74	38.2
0.35	0.00	0.0	1.35	0.83	8.5	2.34	1.81	18.4	3.34	2.79	28.4	4.34	3.76	38.4
0.37	0.00	0.0	1.37	0.85	8.7	2.36	1.83	18.6	3.36	2.80	28.6	4.36	3.78	38.6
0.39	0.00	0.0	1.39	0.87	8.9	2.38	1.85	18.8	3.38	2.82	28.8	4.38	3.80	38.8
0.41	0.00	0.0	1.41	0.89	9.1	2.40	1.87	19.0	3.40	2.84	29.0	4.40	3.82	38.9
0.43	0.00	0.0	1.43	0.91	9.3	2.42	1.89	19.2	3.42	2.86	29.2	4.41	3.84	39.1
0.45	0.00	0.0	1.45	0.93	9.5	2.44	1.90	19.4	3.44	2.88	29.4	4.43	3.86	39.3
0.47	0.00	0.0	1.47	0.95	9.6	2.46	1.92	19.6	3.46	2.90	29.6	4.45	3.88	39.5
0.49	0.00	0.0	1.48	0.97	9.8	2.48	1.94	19.8	3.48	2.92	29.8	4.47	3.90	39.7
0.51	0.01	0.1	1.50	0.99	10.0	2.50	1.96	20.0	3.50	2.94	30.0	4.49	3.92	39.9
0.53	0.03	0.3	1.52	1.00	10.2	2.52	1.98	20.2	3.52	2.96	30.2	4.51	3.93	40.1
0.55	0.05	0.5	1.54	1.02	10.4	2.54	2.00	20.4	3.54	2.98	3.04	4.53	3.95	40.3
0.57	0.07	0.7	1.56	1.04	10.6	2.56	2.02	20.6	3.56	3.00	30.5	4.55	3.97	40.5
0.59	0.08	0.9	1.58	1.06	10.8	2.58	2.04	20.8	3.57	3.02	30.7	4.57	3.99	40.7
0.61	0.10	1.1	1.60	1.08	11.0	2.60	2.06	21.0	3.59	3.03	30.9	4.59	4.01	40.9
0.63	0.12	1.3	1.62	1.10	11.2	2.62	2.08	21.2	3.61	3.05	31.1	4.61	4.03	41.1
0.65	0.14	1.4	1.64	1.12	11.4	2.64	2.10	21.4	3.63	3.07	31.3	4.63	4.05	41.3
0.66	0.16	1.6	1.66	1.14	11.6	2.66	2.12	21.6	3.65	3.09	31.5	4.65	4.07	41.5
0.68	0.18	1.8	1.68	1.16	11.8	2.68	2.13	21.8	3.67	3.11	31.7	4.67	4.09	41.7
0.70	0.20	2.0	1.70	1.18	12.0	2.70	2.15	22.0	3.69	3.13	31.9	4.69	4.11	41.9
0.72	0.22	2.2	1.72	1.20	12.2	2.72	2.17	22.2	3.71	3.15	32.1	4.71	4.13	42.1
0.74	0.24	2.4	1.74	1.21	12.4	2.73	2.19	22.3	3.73	3.17	32.3	4.73	4.15	42.3
0.76	0.26	2.6	1.76	1.23	12.6	2.75	2.21	22.5	3.75	3.19	32.5			
0.78	0.28	2.8	1.78	1.25	12.8	2.77	2.23	22.7	3.77	3.21	32.7			
0.80	0.30	3.0	1.80	1.27	13.0	2.79	2.25	22.9	3.79	3.23	32.9			
0.82	0.31	3.2	1.82	1.29	13.2	2.81	2.27	23.1	3.81	3.25	33.1			
0.84	0.33	3.4	1.84	1.31	13.4	2.83	2.29	23.3	3.83	3.26	33.3			
0.86	0.35	3.6	1.86	1.33	13.6	2.85	2.31	23.5	3.85	3.28	33.5			
0.88	0.37	3.8	1.88	1.35	13.8	2.87	2.33	23.7	3.89	3.30	33.7			
0.90	0.39	4.0	1.90	1.37	13.9	2.89	2.35	23.9	3.89	3.32	33.9			
0.92	0.41	4.2	1.91	1.39	14.1	2.91	2.36	24.1	3.91	3.34	34.1			
0.94	0.43	4.4	1.93	1.41	14.3	2.93	2.38	24.3	3.93	3.36	34.3			
0.96	0.45	4.6	1.95	1.43	14.5	2.95	2.40	24.5	3.95	3.38	34.5			
0.98	0.47	4.8	1.97	1.44	14.7	2.97	2.42	24.7	3.97	3.40	34.7			

Outdoor Unit

▼Ps sensor characteristics

0 to 1.47 MPa (0.5 to 5V output for 0 to 1.47 MPa)

Voltage readings across pins 2 and 3 of CN500 on indoor unit main P.C. board (with negative-side probe of multimeter placed on pin 3)

VOLT	Ps (MPa)	Ps (kg/cm^2)	VOLT	Ps (MPa)	Ps (kg/cm^2)	VOLT	Ps (MPa)	Ps (kg/cm^2)	VOLT	Ps (MPa)	Ps (kg/cm^2)	VOLT	Ps (MPa)	Ps (kg/cm^2)
0.00	0.00	0.0	1.00	0.16	1.7	1.99	0.49	5.0	2.99	0.81	8.3	3.98	1.14	11.6
0.02	0.00	0.0	1.02	0.17	1.7	2.01	0.49	5.0	3.01	0.82	8.4	4.00	1.15	11.7
0.04	0.00	0.0	1.04	0.18	1.8	2.03	0.50	5.1	3.03	0.83	8.4	4.02	1.15	11.7
0.06	0.00	0.0	1.06	0.18	1.8	2.05	0.51	5.2	3.05	0.83	8.5	4.04	1.16	11.8
0.08	0.00	0.0	1.07	0.19	1.9	2.07	0.51	5.2	3.07	0.84	8.6	4.06	1.17	11.9
0.10	0.00	0.0	1.09	0.19	2.0	2.09	0.52	5.3	3.09	0.85	8.6	4.08	1.17	11.9
0.12	0.00	0.0	1.11	0.20	2.0	2.11	0.53	5.4	3.11	0.85	8.7	4.10	1.18	12.0
0.14	0.00	0.0	1.13	0.21	2.1	2.13	0.53	5.4	3.13	0.86	8.8	4.12	1.18	12.1
0.16	0.00	0.0	1.15	0.21	2.2	2.15	0.54	5.5	3.15	0.86	8.8	4.14	1.19	12.1
0.18	0.00	0.0	1.17	0.22	2.2	2.17	0.55	5.6	3.16	0.87	8.9	4.16	1.20	12.2
0.20	0.00	0.0	1.19	0.23	2.3	2.19	0.55	5.6	3.18	0.88	8.9	4.18	1.20	12.3
0.22	0.00	0.0	1.21	0.23	2.4	2.21	0.56	5.7	3.20	0.88	9.0	4.20	1.21	12.3
0.23	0.00	0.0	1.23	0.24	2.4	2.23	0.56	5.8	3.22	0.89	9.1	4.22	1.22	12.4
0.25	0.00	0.0	1.25	0.25	2.5	2.25	0.57	5.8	3.24	0.90	9.1	4.24	1.22	12.5
0.27	0.00	0.0	1.27	0.25	2.6	2.27	0.58	5.9	3.26	0.90	9.2	4.26	1.23	12.5
0.29	0.00	0.0	1.29	0.26	2.6	2.29	0.58	6.0	3.28	0.91	9.3	4.28	1.24	12.6
0.31	0.00	0.0	1.31	0.26	2.7	2.31	0.59	6.0	3.30	0.92	9.3	4.30	1.24	12.7
0.33	0.00	0.0	1.33	0.27	2.8	2.32	0.60	6.1	3.32	0.92	9.4	4.32	1.25	12.7
0.35	0.00	0.0	1.35	0.28	2.8	2.34	0.60	6.1	3.34	0.93	9.5	4.34	1.25	12.8
0.37	0.00	0.0	1.37	0.28	2.9	2.36	0.61	6.2	3.36	0.94	9.5	4.36	1.26	12.9
0.39	0.00	0.0	1.39	0.29	3.0	2.38	0.62	6.3	3.38	0.94	9.6	4.38	1.27	12.9
0.41	0.00	0.0	1.41	0.30	3.0	2.40	0.62	6.3	3.40	0.95	9.7	4.40	1.27	13.0
0.43	0.00	0.0	1.43	0.30	3.1	2.42	0.63	6.4	3.42	0.95	9.7	4.41	1.28	13.0
0.45	0.00	0.0	1.45	0.31	3.2	2.44	0.64	6.5	3.44	0.96	9.8	4.43	1.29	13.1
0.47	0.00	0.0	1.47	0.32	3.2	2.46	0.64	6.5	3.46	0.97	9.9	4.45	1.29	13.2
0.49	0.00	0.0	1.48	0.32	3.3	2.48	0.65	6.6	3.48	0.97	9.9	4.47	1.30	13.2
0.51	0.00	0.0	1.50	0.33	3.3	2.50	0.65	6.7	3.50	0.98	10.0	4.49	1.31	13.3
0.53	0.01	0.1	1.52	0.34	3.4	2.52	0.66	6.7	3.52	0.99	10.1	4.51	1.31	13.4
0.55	0.02	0.2	1.54	0.34	3.5	2.54	0.67	6.8	3.54	0.99	10.1	4.53	1.32	13.4
0.57	0.02	0.2	1.56	0.35	3.5	2.56	0.67	6.9	3.56	1.00	10.2	4.55	1.32	13.5
0.59	0.03	0.3	1.58	0.35	3.6	2.58	0.68	6.9	3.57	1.01	10.2	4.57	1.33	13.6
0.61	0.03	0.4	1.60	0.36	3.7	2.60	0.69	7.0	3.59	1.01	10.3	4.59	1.34	13.6
0.63	0.04	0.4	1.62	0.37	3.7	2.62	0.69	7.1	3.61	1.02	10.4	4.61	1.34	13.7
0.65	0.05	0.5	1.64	0.37	3.8	2.64	0.70	7.1	3.63	1.02	10.4	4.63	1.35	13.8
0.66	0.05	0.5	1.66	0.38	3.9	2.66	0.71	7.2	3.65	1.03	10.5	4.65	1.36	13.8
0.68	0.06	0.6	1.68	0.39	3.9	2.68	0.71	7.3	3.67	1.04	10.6	4.67	1.36	13.9
0.70	0.07	0.7	1.70	0.39	4.0	2.70	0.72	7.3	3.69	1.04	10.6	4.69	1.37	14.0
0.72	0.07	0.7	1.72	0.40	4.1	2.72	0.72	7.4	3.71	1.05	10.7	4.71	1.38	14.0
0.74	0.08	0.8	1.74	0.41	4.1	2.73	0.73	7.4	3.73	1.06	10.8	4.73	1.38	14.1
0.76	0.09	0.9	1.76	0.41	4.2	2.75	0.74	7.5	3.75	1.06	10.8	4.75	1.39	14.2
0.78	0.09	0.9	1.78	0.42	4.3	2.77	0.74	7.6	3.77	1.07	10.9	4.77	1.39	14.2
0.80	0.10	1.0	1.80	0.42	4.3	2.79	0.75	7.6	3.79	1.08	11.0	4.79	1.40	14.3
0.82	0.11	1.1	1.82	0.43	4.4	2.81	0.76	7.7	3.81	1.08	11.0	4.81	1.41	14.3
0.84	0.11	1.1	1.84	0.44	4.5	2.83	0.76	7.8	3.83	1.09	11.1	4.82	1.41	14.4
0.86	0.12	1.2	1.86	0.44	4.5	2.85	0.77	7.8	3.85	1.09	11.2	4.84	1.42	14.5
0.88	0.12	1.3	1.88	0.45	4.6	2.87	0.78	7.9	3.89	1.10	11.2	4.86	1.43	14.5
0.90	0.13	1.3	1.90	0.46	4.6	2.89	0.78	8.0	3.89	1.11	11.3	4.88	1.43	14.6
0.92	0.14	1.4	1.91	0.46	4.7	2.91	0.79	8.0	3.91	1.11	11.4	4.90	1.44	14.7
0.94	0.14	1.5	1.93	0.47	4.8	2.93	0.79	8.1	3.93	1.12	11.4	4.92	1.45	14.7
0.96	0.15	1.5	1.95	0.48	4.8	2.95	0.80	8.2	3.95	1.13	11.5	4.94	1.45	14.8
0.98	0.16	1.6	1.97	0.48	4.9	2.97	0.81	8.2	3.97	1.13	11.5	4.96	1.46	14.9
												4.98	1.47	14.9

9 BACKUP OPERATION (EMERGENCY OPERATION)

This product offers backup modes of operation to tide over certain emergency situations. If a fault occurs in one of the compressors, it is possible to operate the system on an emergency basis by operating only the remaining compressor, (compressor backup operation).
If one of the outdoor units fails in a combined outdoor unit system, the system can be operated on an emergency basis by keeping only the remaining outdoor unit(s), (outdoor unit backup operation).
Perform backup operation setting in accordance with the procedure described below.

9-1. Note for Backup Operation

The method of backup operation differs according to the contents of fault as shown in the table below.

Contents of fault	Method of backup operation	Setting procedure
One of the compressors in the same unit fails (see Note 1)	Compressor backup (see Note 2)	Go to 9-2.
All the compressors in the same unit fail	Outdoor unit backup or cooling-season outdoor unit backup (see Notes 1, 3, 4 and 5)	Go to 9-3. or 9-4.
A fault occurs in a compressor motor coil (e.g. a layer short-circuit)		
A fault occurs in a refrigerating cycle part, fan or related part, or electrical part		
A fault occurs in a temperature sensor or pressure sensor		

Note 1: If the compressor has failed due to a fault in its motor coil (e.g. a layer short-circuit), do not perform compressor backup operation because of severe oil degradation. It could damage other outdoor units.

Note 2: Keep the number of backed-up outdoor units under compressor backup operation to one in the system (single refrigerant line). As for MMY-MAP1806*, MMY-MAP2006* and MMY-MAP2206, the backup operation of compressor cannot be done.

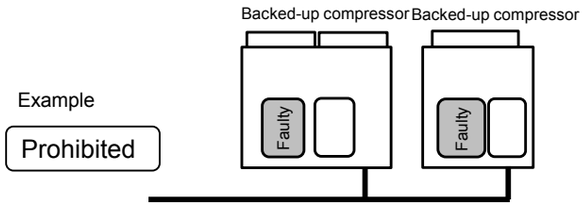

Note 3: Keep the number of backed-up outdoor units under outdoor unit backup operation to one in the system (single refrigerant line).

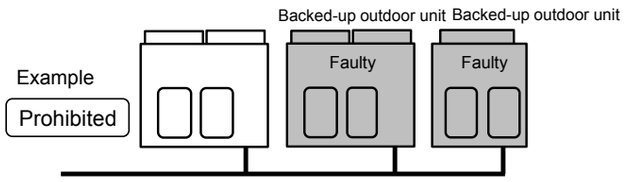

Note 4: It is prohibited to combine compressor backup operation and outdoor unit backup operation.

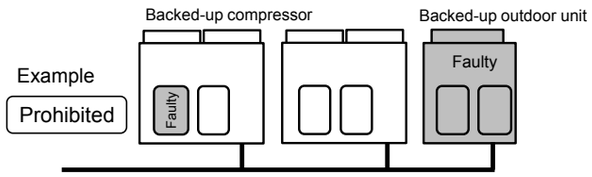

Note 5 : When the chassis of different size are combined, do not perform back up oueration with the large size chassis.

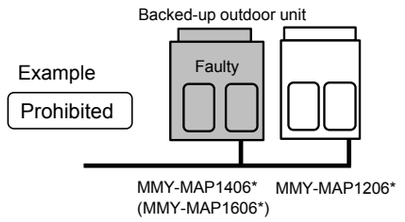

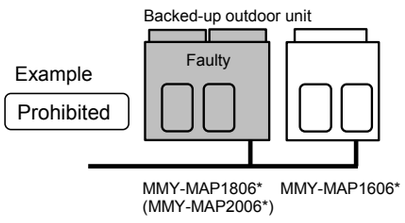

9-2. Compressor Backup Operation Setting

<Outline>

If a fault occurs to one of the compressors installed in outdoor unit, follow the procedure described below to back up the faulty compressor by using the remaining, normal compressor.

<Work Procedure>

(1) Turn off the power supply to all the outdoor units connected to the system.

(2) Set the DIP switches of SW06, provided on the interface P.C. board of the outdoor unit with the faulty compressor, as shown in the table below.

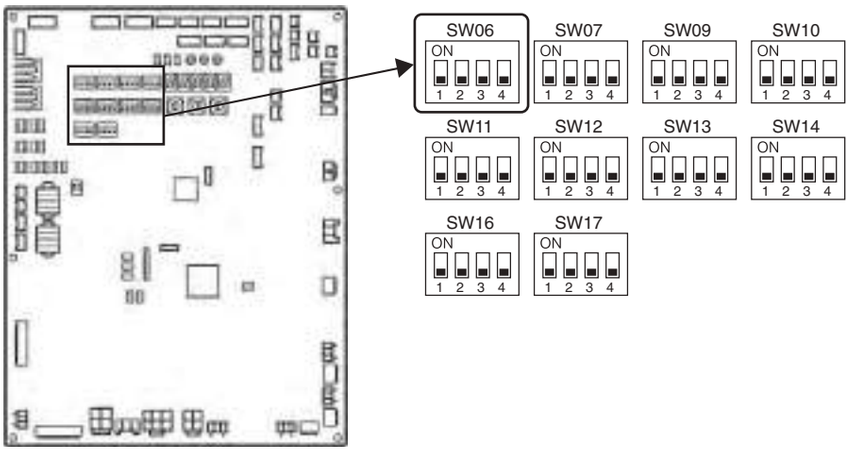

	SW06			
	Bit 1	**Bit 2**	**Bit 3**	**Bit 4**
Factory default setting	OFF	OFF	OFF	OFF
When compressor No.1 (front left) is faulty	ON	OFF	OFF	OFF
When compressor No.2 (front right) is faulty	OFF	ON	OFF	OFF

(3) Change the connection of wiring between Comp-IPDU and Fan-IPDU, as shown in the below.

Outdoor Unit (8, 10, 12, 14, 16, 18HP)

Model: MMY-MAP0806∗, MAP1006∗, MAP1206∗, MAP14B6∗, MAP1406∗, MAP1606∗, MAP18B6∗

1.When compressor No.1 (front left) is faulty：No change the connection of wiring
2.When compressor No.2 (front right) is faulty：

Change the connection of wiring between Como-IPDU and Fan-IPDU as shown in the below.

Ex. MMY-MAP0806*, MAP1006*, MAP1206*, MAP14B6*

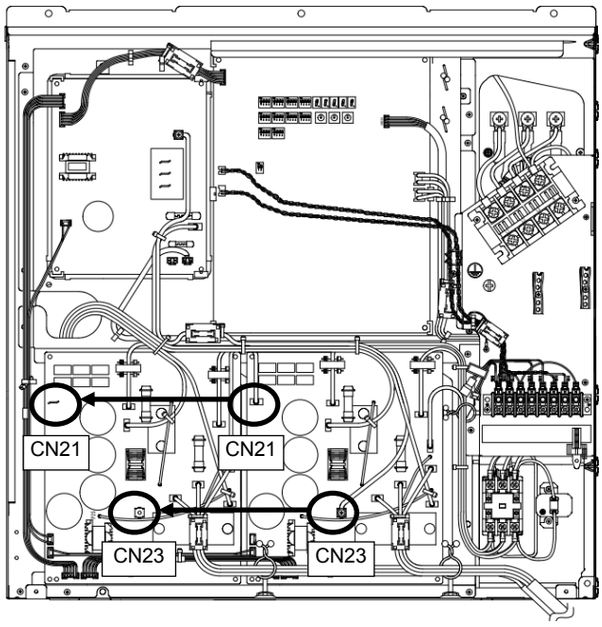

Change the connection of wiring which is connected to the CN21, 23 of Comp-IPDU2
・Change to CN21 of Comp-IPDU1 from CN21 of Comp-IPDU2
・Change to CN23 of Comp-IPDU2 from CN23 of Comp-IPDU2

Ex. MMY- MAP1406∗, MAP1606∗, MAP18B6∗

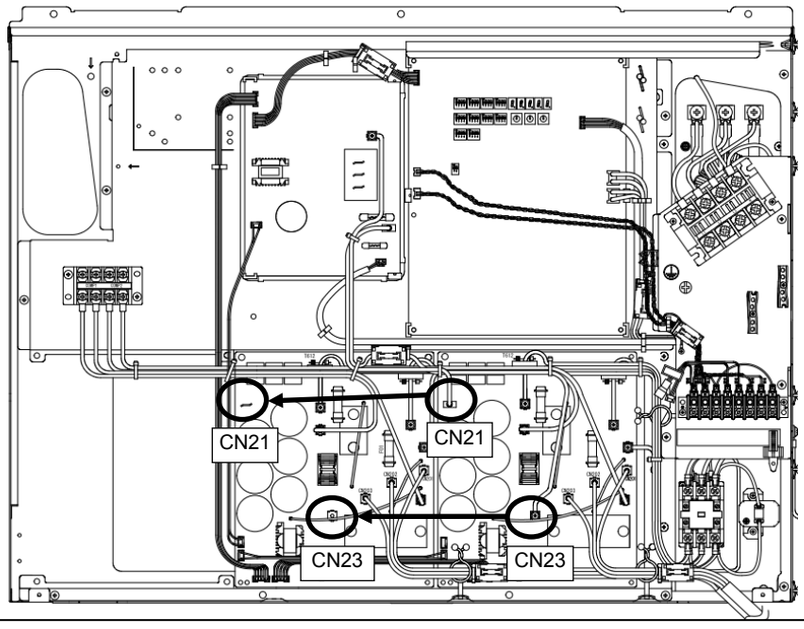

Change the connection of wiring which is connected to the CN21, 23 of Comp-IPDU2
・Change to CN21 of Comp-IPDU1 from CN21 of Comp-IPDU2
・Change to CN23 of Comp-IPDU2 from CN23 of Comp-IPDU2

Outdoor Unit (18, 20, 22HP)

Model: MMY-MAP1806∗, MAP2006∗, MAP2206∗

1.When compressor No.1 (front left) is faulty：
Change the connection of wiring between Comp-IPDU and Fan-IPDU as shown in the below.

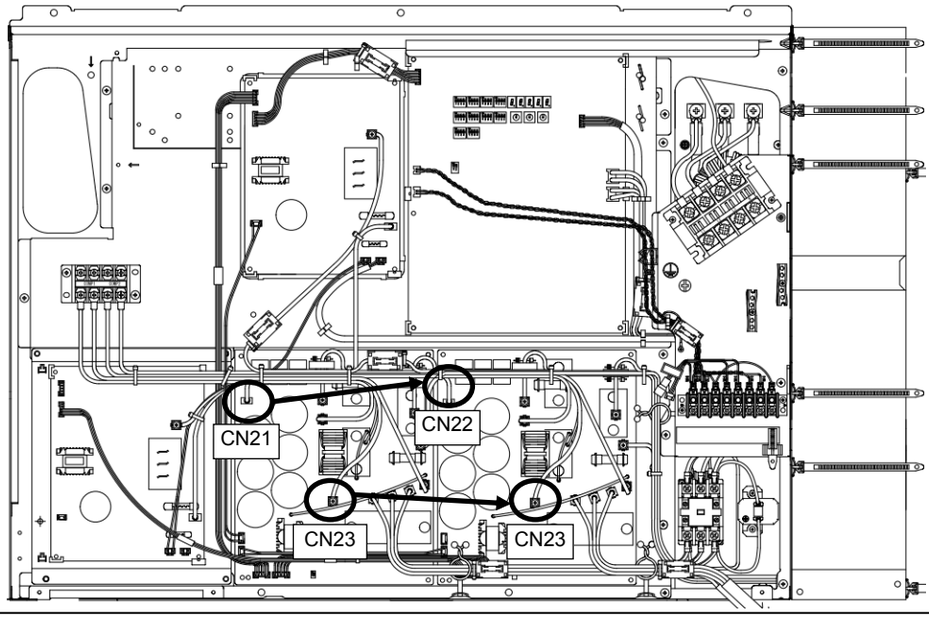

Change the connection of wiring which is connected to the CN21, 23 of Comp-IPDU1
・Change to CN22 of Comp-IPDU2 from CN21 of Comp-IPDU1
・Change to CN23 of Comp-IPDU2 from CN23 of Comp-IPDU1
(Tighten two wirings together with screw terminal)

2.When compressor No.2 (front right) is faulty：
Change the connection of wiring between Comp-IPDU and Fan-IPDU as shown in the below.

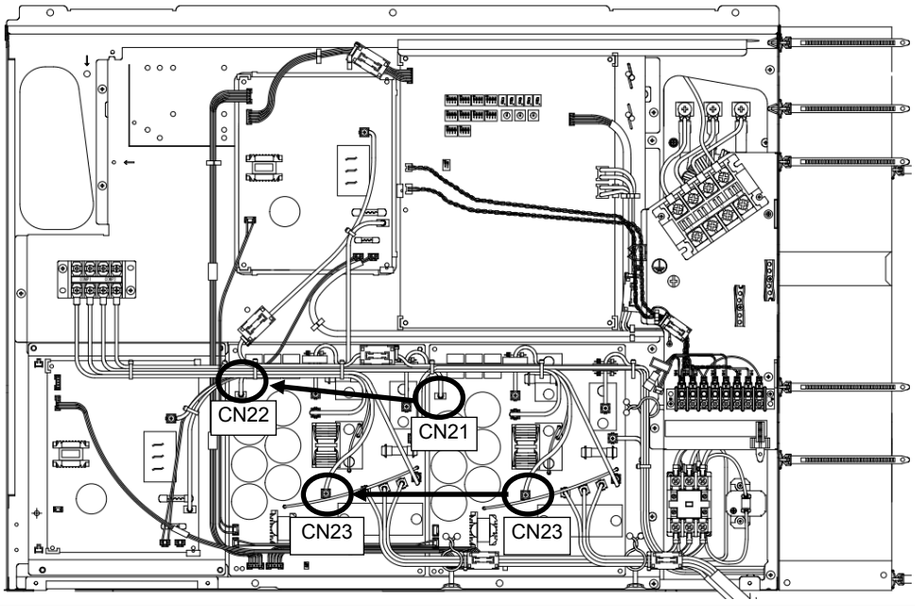

Change the connection of wiring which is connected to the CN21, 23 of Comp-IPDU2
・Change to CN22 of Comp-IPDU1 from CN21 of Comp-IPDU2
・Change to CN23 of Comp-IPDU1 from CN23 of Comp-IPDU2
(Tighten two wirings together with screw terminal)

(4) Turn on the power supply to all the units connected to the system.

This is the end of compressor backup operation setting.

9-3. Outdoor Unit Backup Operation Setting

<Outline>

This product allows outdoor unit backup operation setting to be performed either at the header unit or a follower unit. If any of the fault modes specified below occurs to one of the outdoor units in a multi-outdoor unit system, proceed with outdoor unit backup operation.

- A compressor failure (e.g. a layer short-circuit or a compressor failure in which no compressor is available to back up the faulty compressor)
- A failure of a pressure sensor (Pd or Ps) or a temperature sensor (TD1, TD2, TS1, TS3, TE1, TE2, TG1, TG2, TK1, TK2, TK4, TK5, TL1, TL2 or TL3)

Note: Keep the number of backed-up outdoor units to one in the system (single refrigerant line).

9-3-1. Follower outdoor unit backup operation setting (failure of follower outdoor unit)

<Work procedure>

(1) Turn off the power supply to all the indoor and outdoor units connected to the system.

[Setup of failed follower outdoor unit]

(2) Fully close the gas pipe service valve of the failed outdoor unit.

(3) Leave the service valves of the liquid and balance pipe fully open (to prevent refrigerant stagnation in the unit).
However, if there is a leakage from an outdoor PMV (unable to close), fully close the liquid pipe service valve.

(4) <In case of fault in compressor, electrical part, I/F P.C. board, or IPDU P.C. board>
From this point on, keep the power supply to the failed unit off.
<In case of fault in refrigerating circuit or related part (pressure sensor, temperature sensor, refrigerating cycle part, or fan system part)>
Disconnect the connector [CN03] for outdoor-outdoor communication (BUS2) provided on the interface P.C. board.

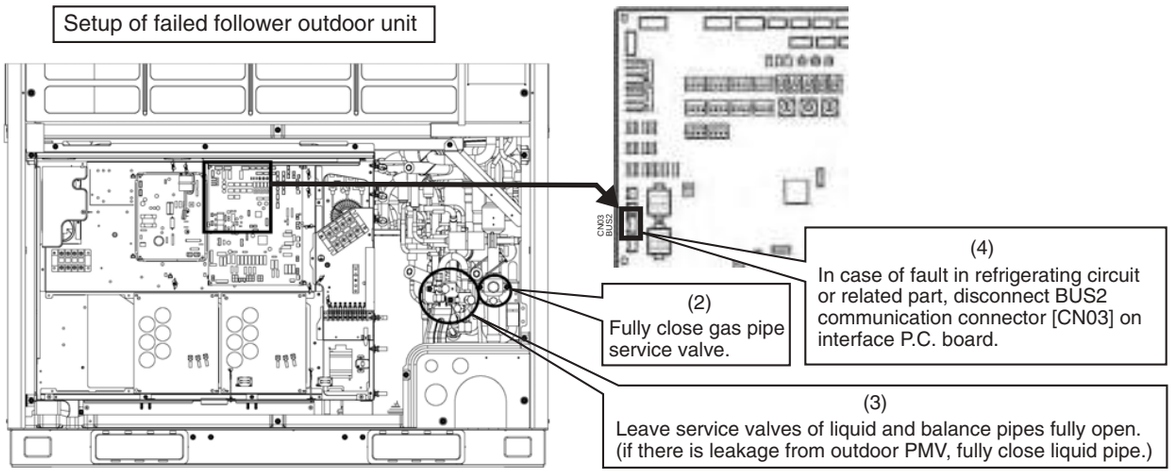

[Setup of header unit]

(5) Turn on Bit 2 of SW09 on the interface P.C. board of the header unit.
(Setting to prevent connected indoor units capacity over error. (E16))

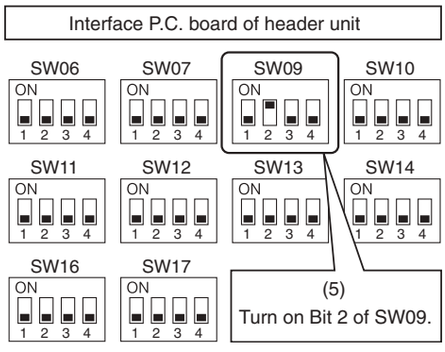

(6) Turn on the power supply to all the units connected to the system other than the failed follower unit.
Determine what to do with the power supply to the failed follower unit in the following manner.
<In case of fault in compressor, electrical part, I/F P.C. board, or IPDU P.C. board>
Leave the power supply off.
<In case of fault in refrigerating circuit or related part (pressure sensor, temperature sensor, refrigerating cycle part, or fan system part)>
Turn on the power supply to protect the compressor (by turning on the case heater).
(When the power supply to the unit is turned on, [E19] (error in the number of outdoor header units) will be displayed on the 7-segment display. However, this will not cause any problems.)

(7) Perform settings needed to gain permission for backup operation from the header unit (error clearance).
1) Set SW01/02/03 on the interface P.C. board to 1/1/1 and confirm that [U1] [E26] (dropping out of an outdoor unit) is displayed on the 7-segment display.
2) Set SW01/02/03 on the interface P.C. board to 2/16/1. Upon confirming that [Er] [… … …] is displayed on the 7-segment display, press SW04 and hold for 5 seconds or more.
3) [Er] [… CL] (error clearance completed) will be displayed on the 7-segment display.
4) Set SW01/02/03 back to 1/1/1. (The display should change to [U1] [– – –].)

(7)
Set SW01/02/03 to 1/1/1
[U1] [E26] will be displayed.
↓
Set SW01/02/03 to [2/16/1].
[Er] [… … …] will be displayed.
↓
Press SW04 and hold for 5 seconds or more
[Er] [… CL] will be displayed.
↓
Set SW01/02/03 back to 1/1/1.
[U1] [– – –] will be displayed.

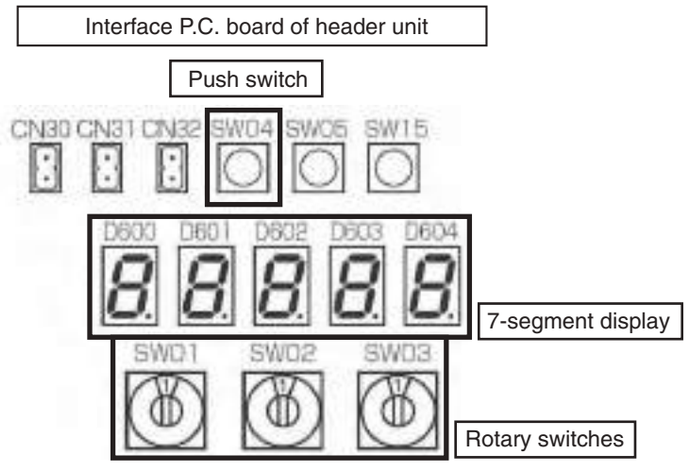

This is the end of follower outdoor unit backup operation setting. Check the operation.

9-3-2. Header outdoor unit backup operation setting (failure of header outdoor unit)

<Work procedure>

(1) Turn off the power supply to all the units connected to the system at the source.

[Setup of failed header outdoor unit]

(2) Fully close the gas pipe service valve of the failed outdoor unit.

(3) Leave the service valves of the liquid and balance pipes fully open (to prevent refrigerant stagnation in the failed outdoor unit).
However, if there is a leakage from an outdoor PMV (unable to close), fully close the liquid pipe service valve.

(4) <In case of fault in compressor, electrical part, I/F P.C. board, or IPDU P.C. board>
From this point on, keep the power supply to the failed unit off.
<In case of fault in refrigerating circuit or related part (pressure sensor, temperature sensor, refrigerating cycle part, or fan system part)>
Disconnect the connector [CN03] for outdoor-outdoor communication (BUS2) provided on the interface P.C. board.

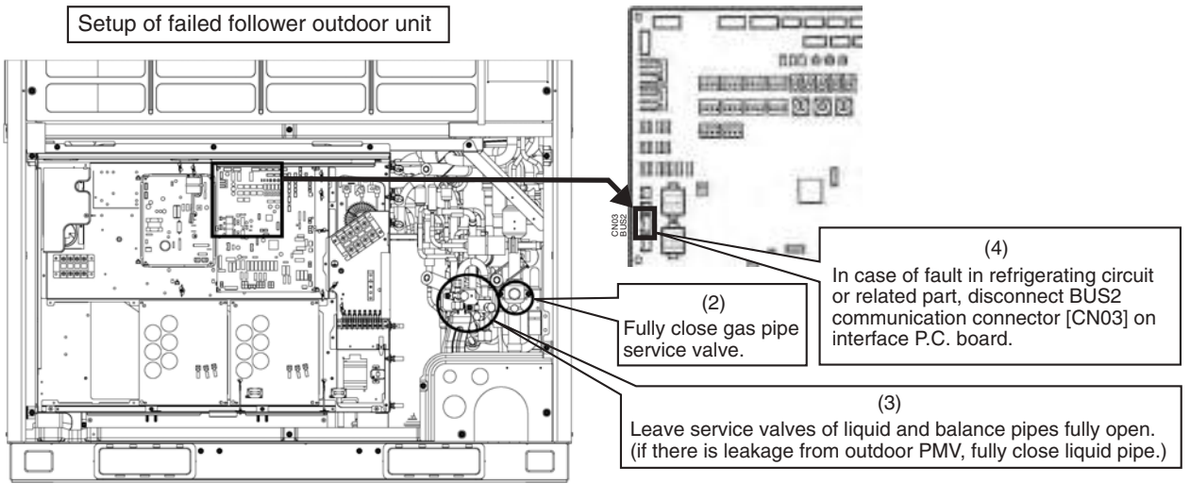

[Selection of new header unit]

(5) Select a new header unit from the follower units on the basis of the following criteria:

- If only one follower unit is connected, select it as the header unit.
- If two follower units are connected, select the follower unit that is nearest to the failed header unit.

[Setup of new header unit]

(6) Set SW13 and SW14 on the interface P.C. board same as the setting of failed header unit (refrigerant line address setting).

(7) Turn on Bit 2 of SW09 on the interface P.C. board. (Setting to prevent connected indoor unit capacity over error. (E16))

(8) Set Bits 1 and 2 of SW30 on the interface P.C. board same as that of the failed header unit (terminator resistance setting).

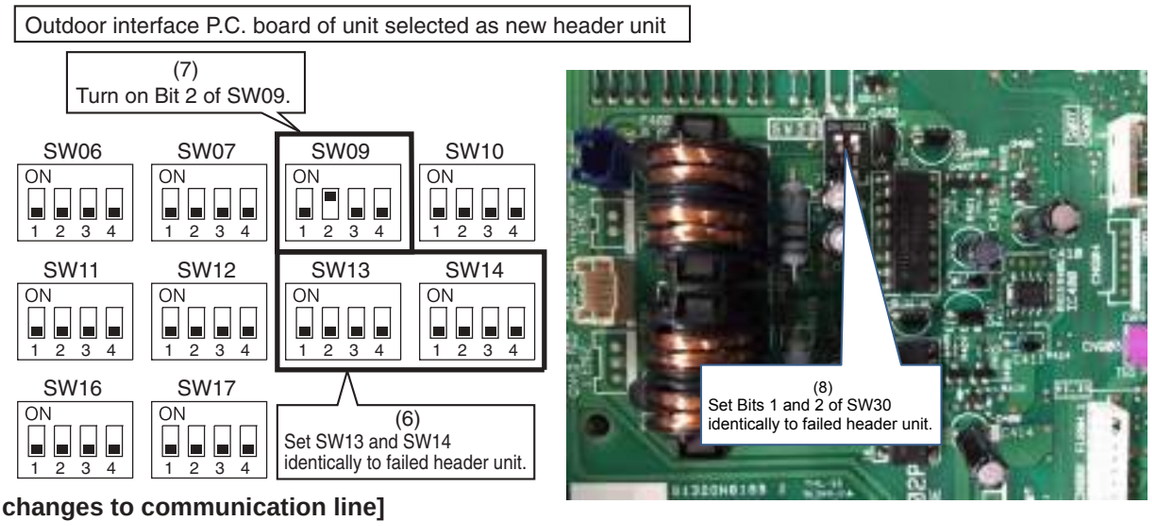

[Wiring changes to communication line]

(9) Redirect the indoor-outdoor communication line connected to the failed header unit [U1/U2] to the unit selected as the header unit [U1/U2].

(10) If a central control device is connected, connect the central control communication line [U3/U4] to the communication line terminal of the unit selected as the new header unit [U3/U4], and connect up the tie connector between the [U1/U2] and [U3/U4] terminals.

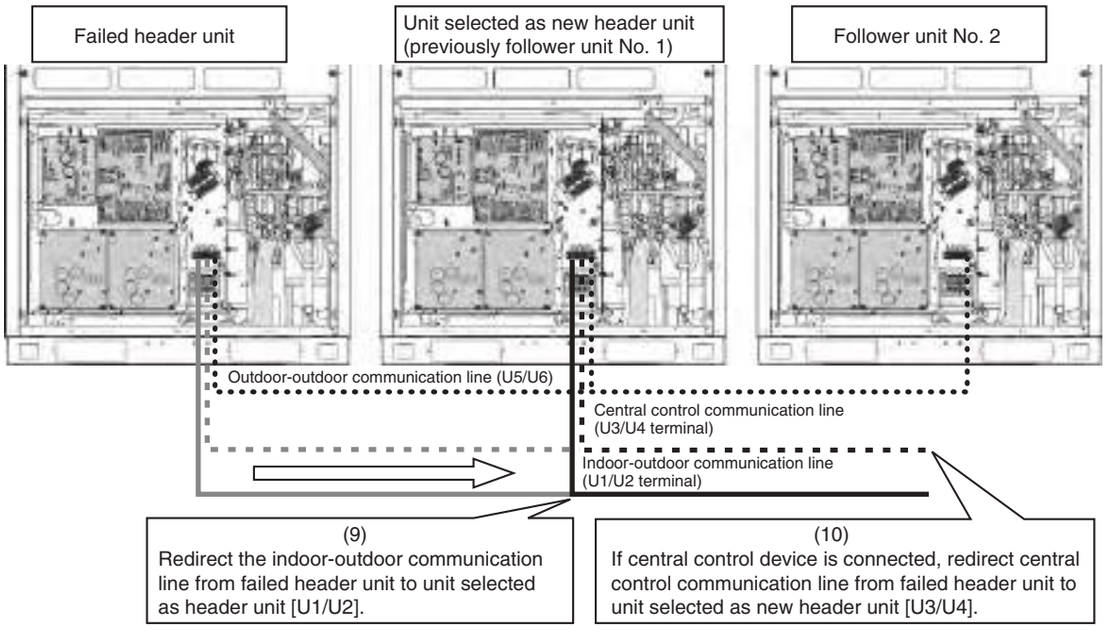

(11) Turn on the power supply to all the units connected to the system other than the failed unit.
Determine what to do with the power supply to the failed unit in the following manner.
<In case of fault in compressor, electrical part, I/F P.C. board, or IPDU P.C. board>
Leave the power supply off.
<In case of fault in refrigerating circuit or related part (pressure sensor, temperature sensor, refrigerating cycle part, or fan system part)>
Turn on the power supply to protect the compressor (by turning on the case heater).
(When the power supply to the unit is turned on, [E19] (error in the number of outdoor header units) will be displayed on the 7-segment display. However, this will not cause any problems.)

This is the end of header outdoor unit backup operation setting. Check the operation.

9-4. Cooling-Season Outdoor Unit Backup Operation Setting

<Outline>

Limited to summer and other situations where there is no need for heating operation, this function makes it possible to get backup operation up and running quickly without going through the normal setup procedure, regardless of which type of outdoor unit has failed, the header unit or a follower unit.

In this backup operation, the system behaves in exactly the same way as described in the “Outdoor Unit Backup Operation Setting” section, except that it cannot perform heating operation.

Note 1: When the system is set up for this function, heating operation is not available. ("HEATING STANDBY" displayed on the remote controller.)

Note 2: If the unit failure has been caused by a fault in the interface P.C. board or electric circuit, this function is not available. In that case, follow the procedure specified in the “Outdoor Unit Backup Operation Setting” section.

<Work procedure>

(1) Turn off the power supply to all the units connected to the system.

[Setup of failed outdoor unit]

Regardless of whether the failed outdoor unit is the header unit or a follower unit, there is no difference in the setup procedure.

(2) Turn on Bits 1 and 2 of SW06 provided on the interface P.C. board.

(3) If there is a leakage from an outdoor PMV (unable to close), fully close the liquid pipe service valve.

(4) Turn on the power supply to all the units connected to the system.

If the fault involves poor insulation of a compressor motor, remove the compressor leads before the power is turned on.

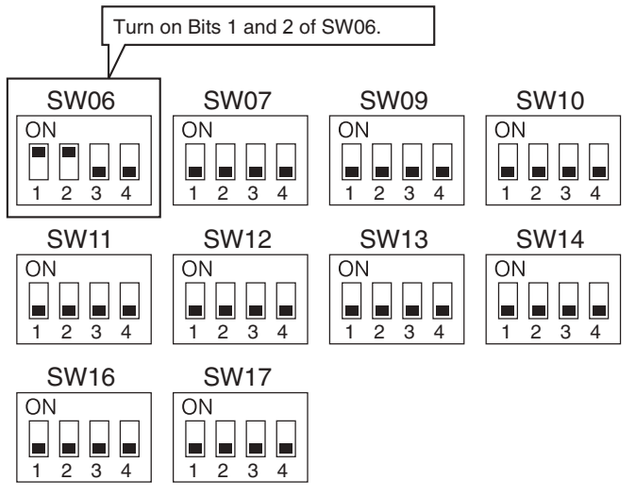

This is the end of cooling-season outdoor unit backup operation setting.

10 OUTDOOR UNIT REFRIGERANT RECOVERY METHOD

10-1. Refrigerant Recovery from Failed Outdoor Unit (Pump-Down)

This product supports refrigerant pump-down, a function which allows refrigerant to be recovered from an outdoor unit in need of repair using a normal outdoor unit in a system featuring multiple outdoor units.

10-1-1. Note for refrigerant recovery operation

When performing pump-down operation, take note of the following matters:

Note 1: The pump-down refrigerant recovery rate changes with outside temperature and other factors.
After pump-down is completed, recover any residual gas using a refrigerant recovery device, etc., and be sure to measure the amount of recovered refrigerant. (The refrigerant recovery rate can be improved by heating the accumulator of the outdoor unit to be repaired during pump-down operation.)

Note 2: If pump-down has been performed, the system cannot be operated until the faulty outdoor unit is repaired.
(Continued operation would be impossible due to a refrigerant overcharge.)

Note 3: If outdoor PMVs 1 and 3 both happen to be faulty (unable to open) the refrigerant in the heat exchangers cannot be recovered. In that case, recover any residual gas in the heat exchangers using a tube piercing valve or some other tool. After a pump-down operation, do not perform any brazing until the residual gas in the heat exchangers is recovered.

10-1-2. Refrigerant recovery procedure A (Case of no outdoor unit backup operation setting)

<Work procedure>

Turn on the power supply to the system at the source, but leave the system switched off.
If the fault involves poor insulation of a compressor motor, remove the motor leads before the power is turned on.

[Setup of failed outdoor unit]

(1) Connect the check joint of liquid pipe and the low pressure-side check joint using a charge hose, and purge the hose of air (to recover refrigerant from the liquid tank and heat exchangers).

(2) Fully close the liquid pipe service valve of the failed outdoor unit.
(Leave the service valves of the gas and balance pipes fully open.)

(3) If the oil is likely to has degraded due to a compressor fault, disconnect the SV3A valve connector of the failed outdoor unit (to prevent the degraded oil from flowing into other outdoor units).

(4) Set SW01/02/03 on the interface P.C. board of the failed outdoor unit to 2/11/1. After [rd] [… … …] is displayed on the 7-segment display, press SW04 and hold for 5 seconds or more.

(5) [rd] [… FF] will be displayed on the 7-segment display, and pump-down operation will start.

* To put the operation on hold midway, turn off the power supply to all the outdoor units, or press SW05 on the interface P.C. board.

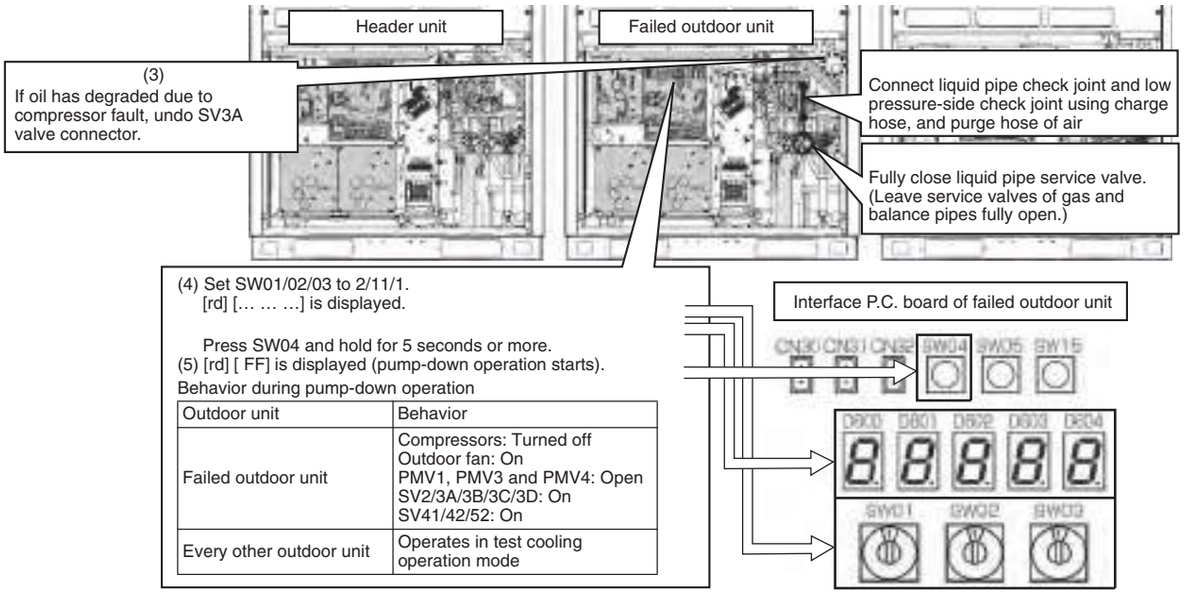

Outdoor unit	Behavior
Failed outdoor unit	Compressors: Turned off Outdoor fan: On PMV1, PMV3 and PMV4: Open SV2/3A/3B/3C/3D: On SV41/42/52: On
Every other outdoor unit	Operates in test cooling operation mode

(6) Approx. 10 minutes after the system starts up, fully close the gas pipe service valve of the failed outdoor unit.

(7) Press SW04 of the failed outdoor unit to have pressure data (MPa) displayed.
(The display switches each time SW04 is pressed.)

Display Example

[rd] […11] → [Pd] [1.20] → [Ps] [1.20]
Initial display — High-pressure sensor output — Low-pressure sensor output

[Selection of outdoor unit for pressure adjustment]

(8) Of all outdoor units operating in the pump-down mode, select the one with the lowest unit No. as an outdoor unit for pressure adjustment.

Identifying Unit No.
The unit No. is the number displayed on the 7-segment display when SW01/02/03 are set to 1/1/1.
([U#] [– – –]: # represents the unit No.)

[Setup of outdoor units other than unit for pressure adjustment and failed unit]

(9) Leaving the balance pipes of the unit for pressure adjustment and the failed unit fully open, fully close the balance pipe service valves of all other outdoor units.

[Setup of outdoor unit for pressure adjustment]

(10) Set SW01/02/03 on the interface P.C. board of the outdoor unit for pressure adjustment to 1/2/2.

(11) As the low-pressure sensor output is displayed on the 7-segment display, adjust the pressure to around 0.12 MPa by slowly closing the gas pipe service valve, with checking pressure data.

(12) Compare the low-pressure sensor outputs of the failed unit with that of the unit for pressure adjustment, and wait until the two pressure readings become almost the same. After letting the system continue operating for a while longer, fully close the gas pipe service valve of the unit for pressure adjustment.

[Setup of failed outdoor unit]

(13) When the low-pressure sensor output of the failed outdoor unit falls below 0.10MPa, fully close the balance pipe packed valve, and press SW05 on the interface P.C. board to finish the pump-down operation.

(14) Turn off the power supply to all the outdoor units, and recover the residual refrigerant in the outdoor unit using a refrigerant recovery device. Be sure to measure the amount of recovered refrigerant. (This is necessary to determine how much additional refrigerant will be needed after the completion of the repair.)

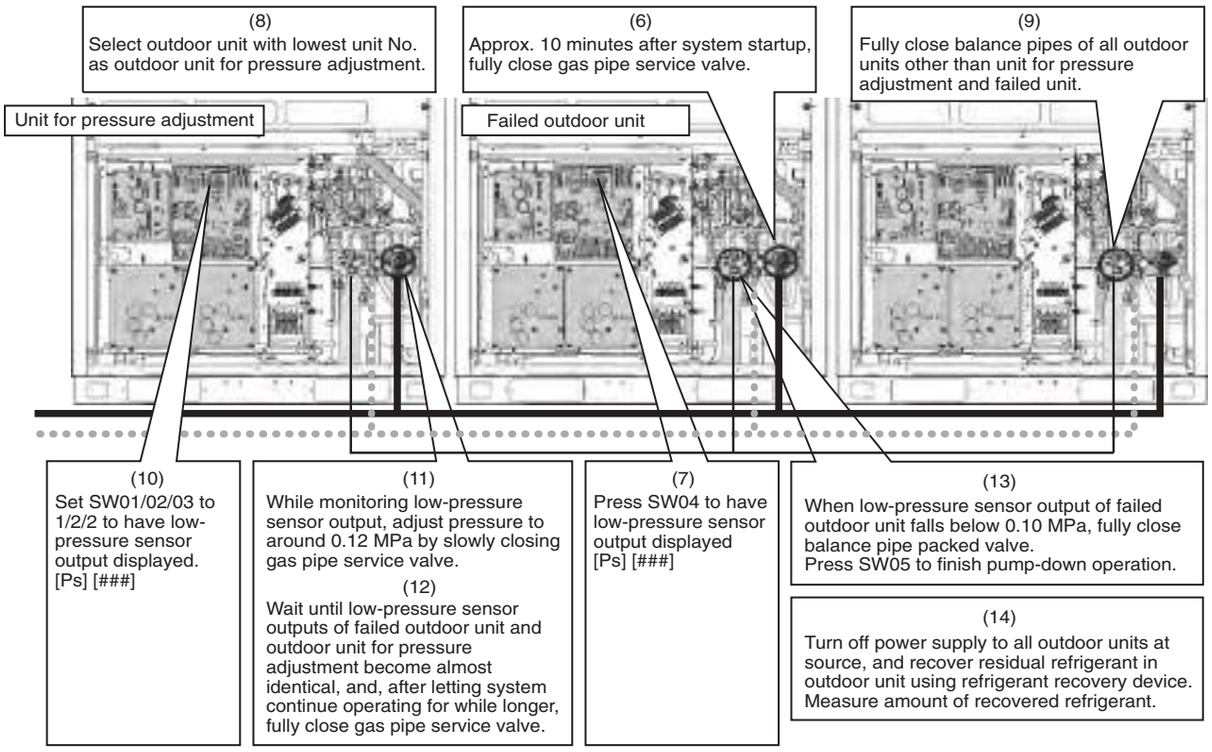

This is the end of the refrigerant recovery operation.

Set SW01/02/03 of the failed outdoor unit and the outdoor unit for pressure adjustment back to 1/1/1.

10-1-3. Refrigerant recovery procedure B (Case of outdoor unit backup operation setting)

<Outline>

If outdoor unit backup operation setting is performed, use an alternative refrigerant recovery procedure as described below, provided that the power cannot be turned on for the failed outdoor unit. (Refrigerant will be recovered from the failed outdoor unit using the test cooling operation function.)

Note 1: If cooling-season outdoor unit backup operation or outdoor unit backup operation is in progress with the power supply to the failed outdoor unit turned on, follow the procedure described in "10-1-2. Refrigerant recovery procedure A (Case of no outdoor unit backup operation setting)". If outdoor unit backup operation setting is performed with the power supply to the failed outdoor unit turned on, recovery operation can only start after putting the outdoor-outdoor communication connector on the interface P.C. board of that unit [CN03] back to its initial state and resetting the power supply.

Note 2: If the power cannot be turned on the failed outdoor unit, the solenoid valves and PMVs of the unit cannot be turned on, so that it reduces the amount of recovered refrigerant compared to a standard pump-down operation. Recover the residual gas in the unit using a refrigerant recovery device, and be sure to measure the amount of recovered refrigerant.

<Work procedure>

[Setup of failed outdoor unit]

(1) Connect the liquid pipe check joint and the low pressure-side check joint using a gauge manifold, and purge the manifold of air (to recover refrigerant from the liquid tank and heat exchangers).

(2) Fully close the liquid pipe packed valve of the failed outdoor unit.
(Leave the service valve of the gas pipe and the packed valve of the balance pipe fully open.)

[Setup of unit selected as header unit (hereafter "header outdoor unit")]

(3) Set SW01/02/03 on the interface P.C. board of the header outdoor unit to 2/5/1. After [C.] [… … …] is displayed on the 7-segment display, press SW04 and hold for 5 seconds or more.

(4) After [C. …] [… – C] is displayed on the 7-segment display, the system starts operating in the test cooling operation mode.

(5) Set SW01/02/03 on the interface P.C. board of the header outdoor unit to 1/2/2 to have the low-pressure sensor output (MPa) displayed on the 7-segment display.

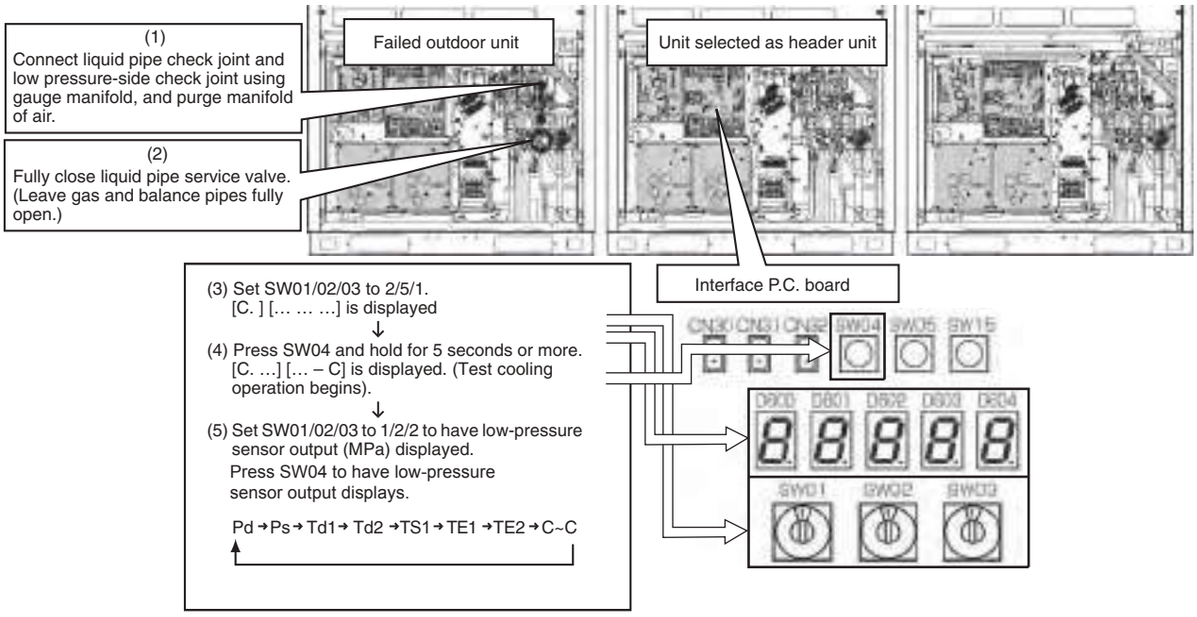

(6) Approx. 10 minutes after the system starts up, fully close the gas pipe service valve of the failed outdoor unit.

[Selection of outdoor unit for pressure adjustment]

(7) Select the header unit as the unit for pressure adjustment.

[Setup of outdoor units other than header unit and failed unit]

(8) Leaving the balance pipes of the unit for pressure adjustment and the failed unit fully open, fully close the balance pipe packed valves of all other outdoor units.

[Setup of header unit]

(9) While monitoring the low-pressure sensor output, adjust the pressure to around 0.12 MPa by slowly closing the gas pipe service valve.

(10) Compare the manifold gauge pressure of the failed unit with the low-pressure sensor output of the header unit, and wait until the two pressure readings become almost identical. After letting the system continue operating for a while longer, fully close the gas pipe service valve of the unit for pressure adjustment.

[Setup of failed outdoor unit]

(11) When the manifold gauge pressure of the failed outdoor unit falls below 0.10 MPa, fully close the balance pipe packed valve, and press SW05 on the interface P.C. board to finish the test cooling operation.

(12) Turn off the power supply to all the outdoor units, and recover the residual refrigerant in the outdoor unit using a refrigerant recovery device. Be sure to measure the amount of recovered refrigerant. (This is necessary to determine how much additional refrigerant will be needed after the completion of the repair.)

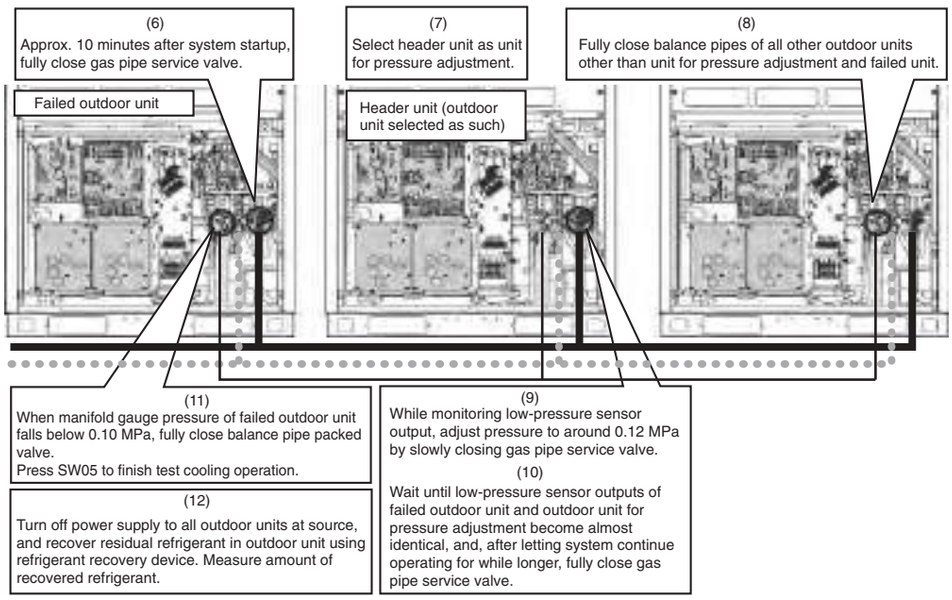

This is the end of the refrigerant recovery operation.
Set SW01/02/03 of the header unit back to 1/1/1.

10-2. How to Operate System While Failed Outdoor Unit Being Repaired

<Outline>

After refrigerant is recovered from the failed outdoor unit through a pump-down operation, the overall amount of refrigerant held by the system becomes excessive, and this makes it impossible to operate the remaining outdoor units even though they are not faulty. However, operation is still possible if the system-wide amount of refrigerant is adjusted in accordance with the procedure described below.

<Work procedure>

(1) Follow the steps specified in “10-1. Refrigerant Recovery from Failed Outdoor Unit (Pump-Down)”.

(2) Adjust the amount of refrigerant held by the system by removing some of it using a refrigerant recovery device, etc.

Determine the amount of refrigerant to be removed according to the capacity of the failed outdoor unit. (See the table below.)

Example: If you are under repairing of a 16HP outdoor unit in the 50HP system
(combination of outdoor unit: 18HP + 16HP + 16HP):
Amount of refrigerant to be remove from this system = 11 kg

(3) Set up the outdoor unit from which refrigerant has been recovered in the manner described in “9-3. Outdoor Unit Backup Operation Setting”.

This completes the procedure.

Capacity code of outdoor unit under repair	Removal amount of refrigerant
[HP]	[kg]
8	8
10	8
12	10
14B	10
14	10.5
16	11
18B	10
18	13
20	13
22	13

10-3. Work procedure after Repair

When vacuuming in the repaired outdoor unit, follow the procedure described below.

<Work procedure>

(1) Fully open PMV1 and PMV3 (MMY-MAP1406∗ to 2206∗ only) in accordance with the table below. **Note:** PMV full-opening operation via short-circuiting of the CN30 pins is automatically undone after 2 minutes, causing the valves to fully close. To maintain fully open state, turn off the power switch of the outdoor unit within 2 minutes of the short-circuiting of the CN30 pins.

SW12				CN30	PMV operation
Bit 1	Bit 2	Bit 3	Bit 4		
OFF	OFF	OFF	OFF	Short-circuit	PMV1 fully open for 2 minutes.
ON	OFF	OFF	OFF	Short-circuit	PMV3 fully opens for 2 minutes.

(2) Be sure to perform vacuuming in from the three check joints shown in the diagram below (liquid pipe, discharge pipe and suction pipe).

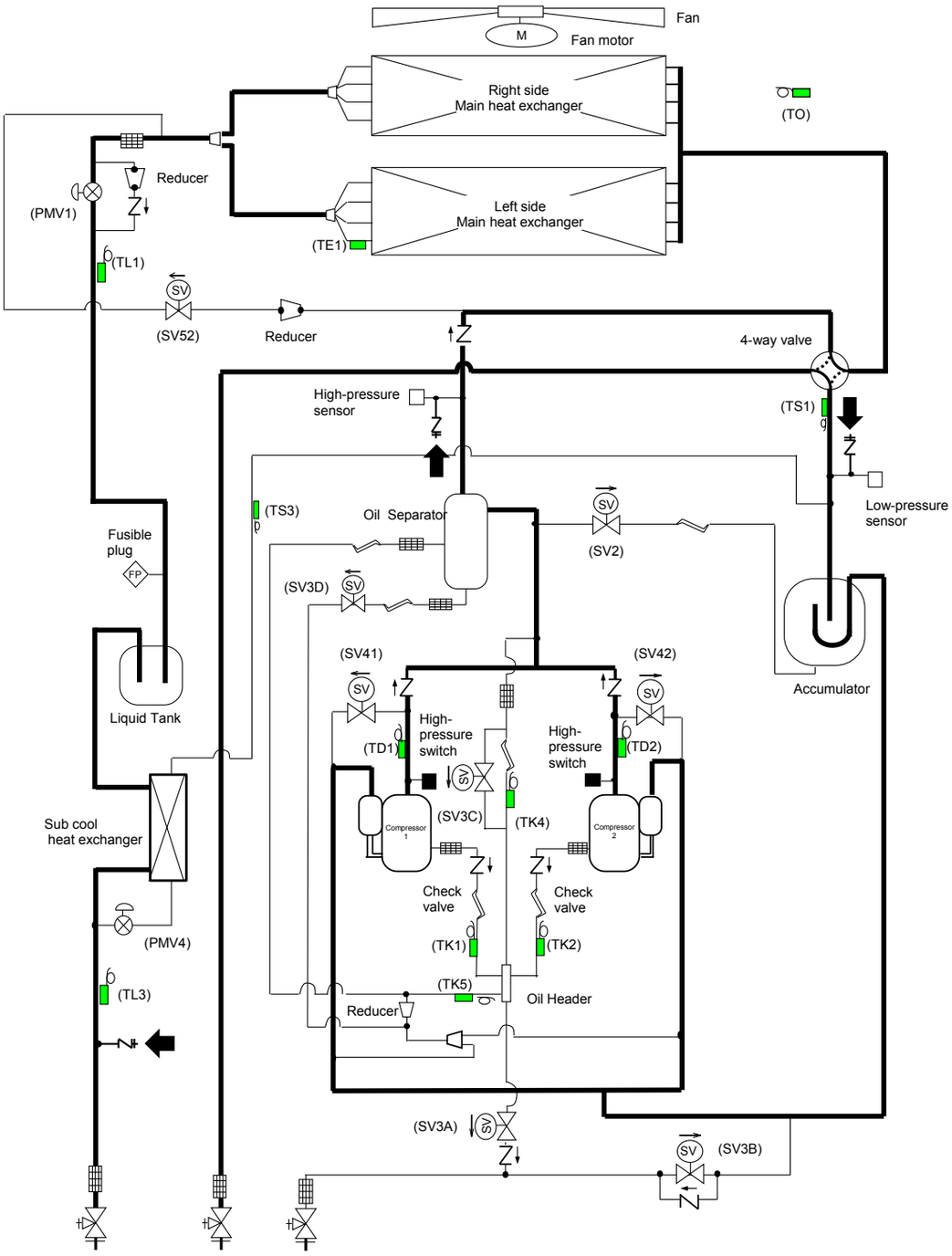

11 REPLACING COMPRESSORS

11-1. Compressor Replacement Procedure (Outline)

START

↓

Is the outdoor unit the only one in the system?

YES → Manually open PMV1, 3 and 4 of the failed unit (by short-circuiting the pins of CN30 on I/F P.C. board and turning off the power switch), and recover refrigerant using a refrigerant recovery device (*1).

NO → Recover refrigerant from the failed unit in accordance with "10 OUTDOOR UNIT REFRIGERANT RECOVERY METHOD".

↓

Turn off the power switch of the failed outdoor unit.

↓

Remove the faulty compressor.

↓

Measure the amount of oil in the faulty compressor.

↓

Check the color of the oil in the faulty compressor.
ASTM grade: Is it 4 or above?
(Judge the condition of the oil against color samples, and decide whether to replace the faulty compressor only or all compressors.)

NO → Replace the faulty compressor only.

YES ↓

Replace both the faulty compressor and the normal compressor.

↓

Measure the amount of oil in the normal compressor.

↓

Adjust the amount of oil according to the oil quantity measurement result(s).

↓

Install the new compressor(s) (*2).

↓

Perform a leakage check of the failed outdoor unit.

↓

Perform vacuum drying in the failed outdoor unit.

↓

Refrigerant charging

↓

END

⚠ WARNING

In situations such as indoor unit relocation and repairs, it is not possible to recover all the refrigerant held by the system in the outdoor units.
It could cause a serious accident, such as blow out or injury.
Be sure to perform refrigerant recovery using a refrigerant recovery device.

⚠ WARNING

When detaching a pipe by heating with a burner at brazed joint, take care as any oil left in the piping may burn in a momentary flash of fire when the brazed filler metal melts.

*1 The full-opening of PMV1, 3 and 4 via short-circuiting of the CN30 pins is automatically undone after 2 minutes, causing the valves to fully close. To maintain fully open state, turn off the power switch of the outdoor unit within 2 minutes.
*2 The SMMS-e (6 series) and the SMMS-i (4 series) use different types of compressors.
Be sure to check the service part code.

This flowchart only shows the standard compressor replacement procedure. Since the situation can differ site by site, perform the task in accordance with the following judgment criteria:

(1) New compressors are charged with 1900cc of oil per unit.

(2) The amount of oil held by an outdoor unit is as shown below.

Model MAP-	0806∗, 1006∗, 1206∗, 14B6∗	1406∗, 1606∗ 1806∗	1806∗, 2006∗, 2206*
Amount of oil [cc]	4300	4800	5300

(3) When a compressor is dismantled, it usually contains 800-1400cc oil.
The amount of oil held by an oil separator is usually 0-1000cc for MAP0806∗, MAP1006∗, MAP1206∗, MAP14B6∗, MAP1406∗, MAP1606∗, MAP18B6*, MAP1806∗, MAP2006∗ and MAP2206*

11-2. Replacement of Compressors

<Checking color of oil in faulty compressor>

- Lay the faulty compressor down, draw a small amount of oil via the oil equalization pipe, and check its color against color samples.
- Determine the number of compressors to be replaced according to the color checking result.
  ASTM grade: Below 4 → Replace the faulty compressor only.
  ASTM grade: 4 or above → Replace both the faulty compressor and the normal compressor(s).

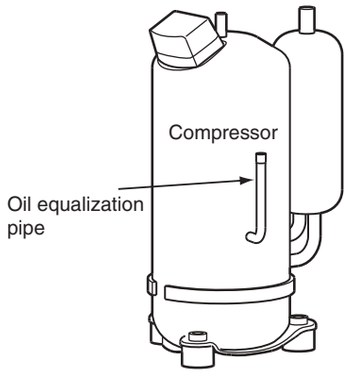

⚠WARNING

When detaching a pipe by heating with a burner at brazed joint, take care as any oil left in the piping may burn in a momentary flash of fire when the brazing filler metal melts.

[When replacing faulty compressor only]

<Measuring amount of oil in faulty compressor>

Amount of oil in faulty compressor: A [cc] = (Weight of compressor as it was dismantled (kg) - D) x 1042
(Specific volume of oil: 1042 [cc/kg])

(kg)

Compressor model	D : Weight (not include oil)
RA641A3TB-20M	23.6
RA421A3TB-20MD	21.9

※Please check the type name of the compressor as it was dismantled.

<Adjusting amount of oil in new compressor> (1900cc at shipment)

- Perform the adjustment on the basis of how much oil the faulty compressor contained, A [cc], by following the steps below.

1 Amount of oil in faulty compressor A [cc]: 0 ≤ A < 1000

(1) Adjust the amount of oil in the new compressor to 1000cc.
(Lay the new compressor down and draw 900 [cc] of oil via the oil-equalization pipe.)

Notes:

- Do not draw more than 900 [cc] of oil as it may cause damage to the compressor.
- If the faulty compressor contained 500cc or less, there may have been a problem with the oil equalization circuit, etc. Perform checks in accordance with “11-3. Check Procedure to Search Cause of Compressor Oil Shortage”.

2 Amount of oil in faulty compressor A [cc]: 1000 ≤ A < 1900

(1) Adjust the amount of oil in the new compressor to A cc.
(Lay the new compressor down and draw (1900 - A) [cc] of oil via the oil equalization pipe.)

3 Amount of oil in faulty compressor A [cc]: 1900 ≤ A

(1) Adjust the amount of oil in the new compressor to A cc.
(Insert a hose into the discharge pipe or oil equalization pipe of the new compressor and inject (A-1900) [cc] of oil using a funnel, etc.)

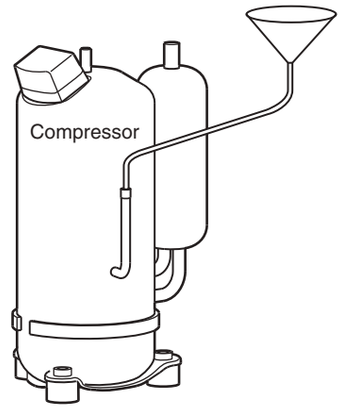

[When replacing normal as well as faulty compressor] - applicable to MMY-MAP0806*, 1006*, 1206* and 14B6*

<Remove the normal compressor>

- Remove the normal compressor in the same way as the faulty compressor.

Note:

- Be sure to insulate the removed compressor leads using insulation tape, etc.

⚠WARNING

When detaching a pipe by heating with a burner at brazed joint, take care as any oil left in the piping may burn in a momentary flash of fire when the brazing filler metal melts.

<Measuring amount of oil in normal compressor>

- As was the case with the faulty compressor, measure the amount of oil contained by placing the compressor on a scale.
  Amount of oil in normal compressor: B [cc] = (Weight of compressor as it was dismantled (kg) - D) × 1042
  (Specific volume of oil: 1042 [cc/kg])

Note:

(kg)

Compressor model	D : Weight (not include oil)
RA421A3TB-20MD	21.9

※Please check the type name of the compressor as it was dismantled.

<Adjusting amount of oil in new compressors>

- Perform the adjustment on the basis of how much oil the faulty compressor contained, A [cc], and how much oil the normal compressor contained, B [cc], by following the steps below.

1 Combined amount of oil in faulty and normal compressors A+B [cc]: 0 ≤ A+B < 2000

(1) Adjust the amount of oil in the two new compressors to 1000cc each (total 2000cc).

- Lay the compressors down and draw 900 [cc] of oil from each of them via their oil equalization pipes.

Notes:

- Do not draw more than 900 [cc] of oil from a compressor as it may cause damage.
- If the faulty compressor contained 500cc or less, there may have been a problem with the oil equalization circuit, etc. Perform checks in accordance with “11-3. Check Procedure to Search Cause of Compressor Oil Shortage”.

2 Combined amount of oil in faulty and normal compressors A+B [cc]: 2000 ≤ A+B < 3800

(1) Adjust the amount of oil in the two new compressors to (A+B)/2 cc each.

- Lay the compressor down and draw [3800-(A+B)]/2 [cc] of oil from each of them via their oil equalization pipes.

3 Combined amount of oil in faulty and normal compressors A+B [cc]: 3800 ≤ A+B

(1) Adjust the amount of oil in the two new compressors to (A+B)/2 cc each.
(Insert a hose into the discharge pipe or oil equalization pipe of each compressor and inject (A+B)/2-1900 [cc] of oil using a funnel, etc.)

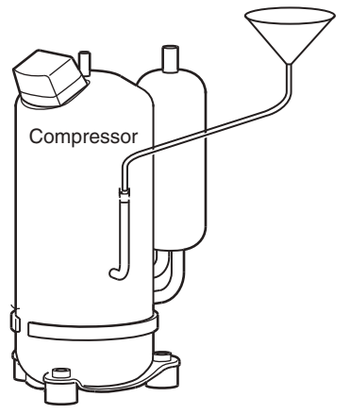

[When replacing normal as well as faulty compressor] - applicable to MMY-MAP1406∗, 1606∗ and 18B6∗

<Remove the normal compressor>

- Remove the normal compressor in the same way as the faulty compressor.

Note:

- Be sure to insulate the removed compressor leads using insulation tape, etc.

⚠ WARNING

When detaching a pipe by heating with a burner at brazed joint, take care as any oil left in the piping may burn in a momentary flash of fire when the brazing filler metal melts.

<Measuring amounts of oil in normal compressor>

- As was the case with the faulty compressor, measure the amount of oil contained by placing each compressor on a scale.
  Amount of oil in normal compressor: B [cc] = (Weight of compressor as it was dismantled (kg) - D) × 1042
  (Specific volume of oil: 1042 [cc/kg])

Note:

(kg)

Compressor model	D : Weight (not include oil)
RA641A3TB-20M	23.6

※Please check the type name of the compressor as it was dismantled.

<Adjusting amount of oil in new compressors>

- Perform the adjustment on the basis of how much oil the faulty compressor contained, A [cc], and how much oil the normal compressor contained, B [cc], by following the steps below.

1 Combined amount of oil in faulty compressor and normal compressor A+B [cc]: 0 ≤ A+B < 2000

(1) Adjust the amount of oil in the two new compressors to 1000cc each (total 2000cc).

- Lay the compressors down and draw 900 [cc] of oil from each of them via their oil equalization pipes.

Notes:

- Do not draw more than 900 [cc] of oil from a compressor as it may cause damage.
- If the faulty compressor contained 500cc or less, there may have been a problem with the oil equalization circuit, etc. Perform checks in accordance with “11-3. Check Procedure to Search Cause of Compressor Oil Shortage”.

2 Combined amount of oil in faulty compressor and normal compressor A+B [cc]: 2000 ≤ A+B < 4800

(1) Adjust the amount of oil in the two new compressors to (A+B)/2 cc each.

- Lay the compressor down and draw [4800-(A+B)]/2 [cc] of oil from each of them via their oil equalization pipes.

3 Combined amount of oil in faulty compressor and normal compressor A+B [cc]: 4800 ≤ A+B

(1) Adjust the amount of oil in the two new compressors to (A+B)/2 cc each.

- Insert a hose into the discharge pipe or oil equalization pipe of each compressor and inject (A+B)/2-1900 [cc] of oil using a funnel, etc.)

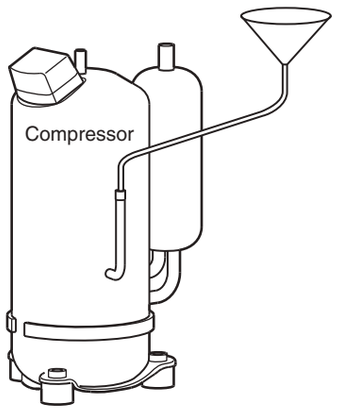

[When replacing normal as well as faulty compressor] - applicable to MMY-MAP 1806∗, 2006∗ and 2206∗

<Remove the normal compressor>

- Remove the normal compressor in the same way as the faulty compressor.

Note:

- Be sure to insulate the removed compressor leads using insulation tape, etc.

⚠ WARNING

When detaching a pipe by heating with a burner at brazed joint, take care as any oil left in the piping may burn in a momentary flash of fire when the brazing filler metal melts.

<Measuring amounts of oil in normal compressors>

- As was the case with the faulty compressor, measure the amount of oil contained by placing each compressor on a scale.
  Amount of oil in normal compressor: B [cc] = (Weight of compressor as it was dismantled (kg) - D) × 1042
  (Specific volume of oil: 1042 [cc/kg])

Note:

(kg)

Compressor model	D : Weight (not include oil)
RA641A3TB-20M	23.6

※Please check the type name of the compressor as it was dismantled.

<Adjusting amount of oil in new compressors>

- Perform the adjustment on the basis of how much oil the faulty compressor contained, A [cc], and how much oil the normal compressor contained, B [cc], by following the steps below.

1 Combined amount of oil in faulty compressor and normal compressor A+B [cc]: 0 ≤ A+B < 2000

(1) Adjust the amount of oil in the two new compressor to 1000cc each (total 2000cc).

- Lay the compressor down and draw 900 [cc] of oil from each of them via their oil equalization pipes.

Notes:

- Do not draw more than 900 [cc] of oil from a compressor as it may cause damage.
- If the faulty compressor contained 500cc or less, there may have been a problem with the oil equalization circuit, etc. Perform checks in accordance with “11-3. Check Procedure to Search Cause of Compressor Oil Shortage”.

2 Combined amount of oil in faulty compressor and normal compressor A+B [cc]: 2000 ≤ A+B < 5300

(1) Adjust the amount of oil in the two new compressor to (A+B)/2 cc each.

- Lay the compressor down and draw [5300-(A+B)]/2 [cc] of oil from each of them via their oil equalization pipes.

3 Combined amount of oil in faulty compressor and normal compressor A+B [cc]: 5300 ≤ A+B

(1) Adjust the amount of oil in the two new compressors to (A+B)/2 cc each.
(Insert a hose into the discharge pipe or oil equalization pipe of each compressor and inject (A+B)/2-1900 [cc] of oil using a funnel, etc.)

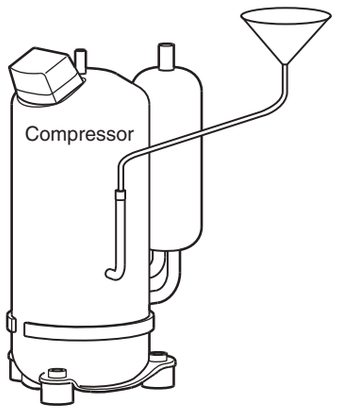

<Installing compressor>

- Install a compressor by following the dismantling procedure in reverse.
- The dismantling process may have loosened compressor leads and quick connectors. Prior to installation, therefore, tighten them a little with a pair of pliers, and verify that they are tight after reconnection.

Notes:

- Although a compressor is provided with only two hexagonal bolts, it is standard.
- The tightening torque of the hexagonal bolts, used to mount the compressor, is 200kg/cm.
- If oil has been drawn from the accumulator, repair the cut pipe through pinching and brazing.

<Vacuum-pumping>

(Single outdoor unit system)

- Before performing vacuum-pumping, fully open PMV1, 3 and 4. If they are closed, the heat exchangers of the outdoor unit cannot be vacuum-pumped.
- Connect a vacuum pump consecutively to the check joints placed in the liquid and discharge pipes and on the high-pressure side of the suction pipe, and turn it on.
- Operate the vacuum drying until the vacuum gauge indicates 1 mmHg.

<Method to fully open PMV manually>

(1) Turn on the power switch of the outdoor unit.

(2) With the Bits 1 and 2 of SW12 set to off, short-circuit the pins of CN30.

(3) Disconnect the connectors of PMV1 from the I/F P.C. board.

(4) With the Bits 1 and 2 of SW12 set to off and on, respectively, short-circuit the pins of CN30.

(5) Disconnect the connector of PMV4 from the I/F P.C. board

(6) With the Bits 1 and 2 of SW12 set to on and off, respectively, short-circuit the pins of CN30.

(7) Disconnect the connector of PMV3 from the I/F P.C. board.

(8) Turn off the power switch of the outdoor unit.

Note: Steps (6) and (7) are not required for MMY-MAP0806∗, 1006∗, 1206∗, and 14B6∗

<Refrigerant charging>

- Inject the same amount of refrigerant as the recovered residual refrigerant via the charging port of the liquid-side service valve.

11-3. Check Procedure to Search Cause of Compressor Oil Shortage

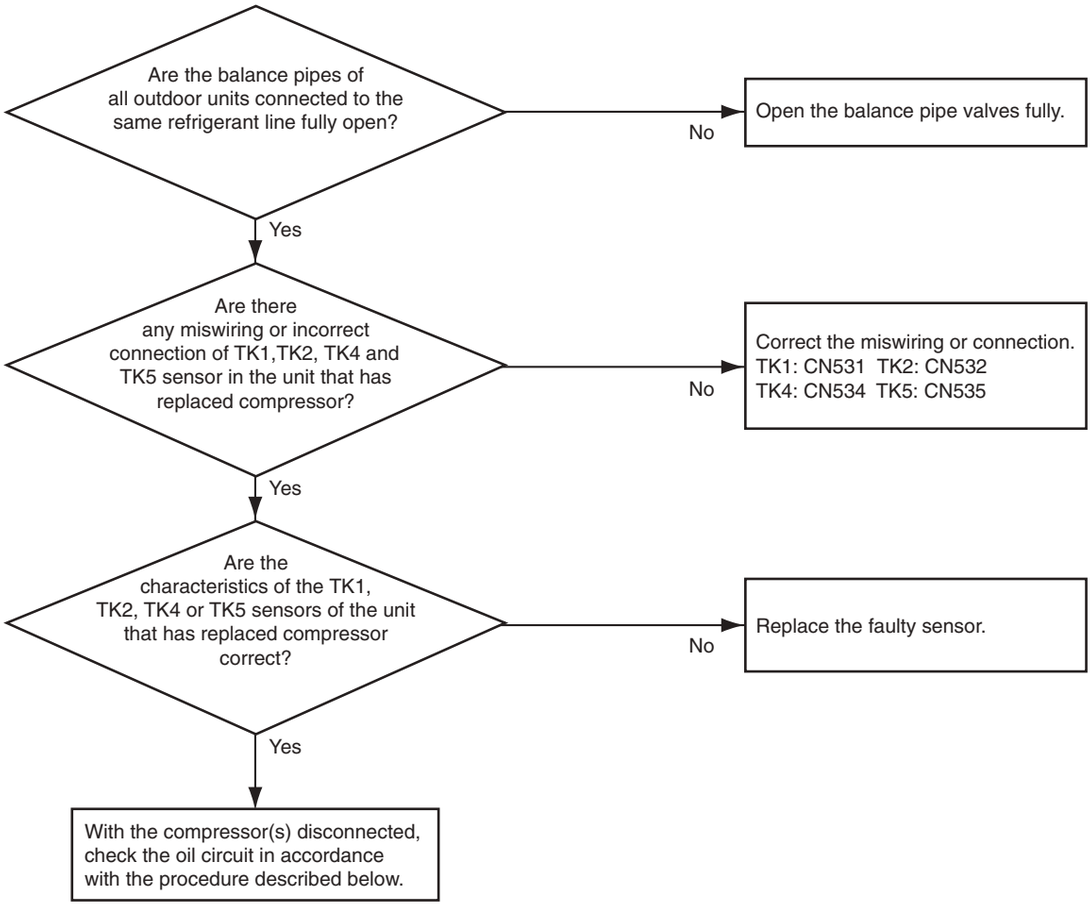

(To next page)

<MMY-MAP0806∗, MAP1006∗, MAP1206∗ and MAP14B6∗>

Check items and procedures to follow when checking oil circuit with compressor(s) disconnected

Check item	Location	Procedure
Leakage of outdoor PMV Leakage of check valve in discharge pipe convergent section	A,C	1) With PMV1 fully closed, apply pressure to the check joint of liquid pipe with nitrogen, and check the pressure at the check joint of discharge pipe. If the pressure at the check joint of discharge pipe increases, there is a leak from PMV1 (A) and check valve of discharge pipe (C). Replace the faulty parts. 2) If the pressure does not increase, fully open outdoor PMV 1 and check the pressure at the check joint of discharge pipe again. If the pressure increases, there is a leak from the check valve of discharge pipe (C). Replace the part.
Leakage of check valve in discharge pipe	E	3) With pressure applied to the check joint of discharge pipe with nitrogen, if gas escapes from the discharge pipe section of the disconnected compressor, there is a leak from the check valve of discharge pipe (E). Replace the part.
Leakage of check valve in oil equalization circuit	F	4) With pressure applied to the check joint of discharge pipe with nitrogen, if gas escapes from the oil equalization pipe section of the disconnected compressor, there is a leak from the oil equalization pipe check valve (F). Replace the part.
Leakage of SV3A valve	G	5) With pressure applied to the check joint of discharge pipe with nitrogen, manually open the SV3B valve. If gas escapes from the suction pipe section of the disconnected compressor, there is a leak from the SV3A valve. Replace the part.
Leakage of SV3B valve	H	6) Then manually open the SV3A valve. If gas escapes from the suction pipe section of the disconnected compressor, there is a leak from the SV3B valve. Replace the part.
Clogging of SV3D valve Clogging of oil-return capillary Clogging of oil-return distributor	J	7) With pressure applied to the check joint of discharge pipe with nitrogen, manually open the SV3D valve. If gas does not escape from the suction pipe section of the disconnected compressor, the SV3D valve, oil-return capillary or oil-return distributor is clogged. Replace the part.

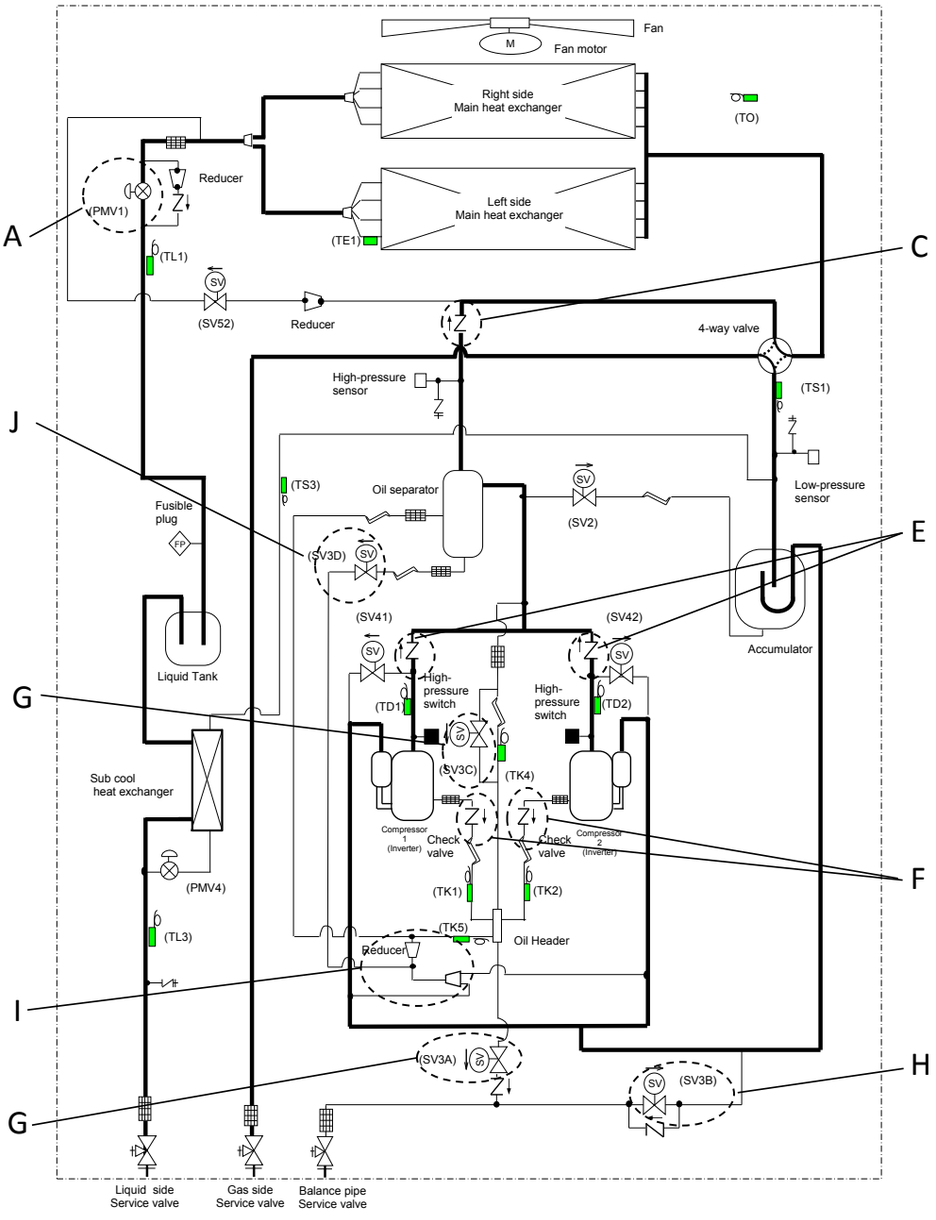

<MMY-MAP1406*, MAP1 606*, MAP18B6*>

Check items and procedures to follow when checking oil circuit with compressor(s) disconnected

Check item	Location	Procedure
Leakage of outdoor PMV Leakage of check valve in discharge pipe convergent section	A,B C	1) With PMV1 and 3 fully closed, apply pressure to the check joint of liquid pipe with nitrogen, and check the pressure at the check joint of discharge pipe. If the pressure at the check joint of discharge pipe increases, there is a leak PMV1(A) or 3(B) and check valve of dischage pipe (C). Replace the faulty parts. 2) If the pressure does not increase, fully open outdoor PMV1 and 3 and check the pressure at the check joint of discharge pipe again. If the pressure increases, there is a leak from the check valve of discharge pipe (C). Replace the part.
Leakage of check valve in discharge pipe	E	3) With pressure applied to the check joint of discharge pipe with nitrogen, if gas escapes from the discharge pipe section of the disconnected compressor, there is a leak from the check valve of discharge pipe (E). Replace the part.
Leakage of check valve in oil equalization circuit	F	4) With pressure applied to the check joint of discharge pipe with nitrogen, if gas escapes from the oil equalization pipe section of the disconnected compressor, there is a leak from the oil equalization pipe check valve (F). Replace the part.
Leakage of SV3A valve	G	5) With pressure applied to the check joint of discharge pipe with nitrogen, manually open the SV3B valve. If gas escapes from the suction pipe section of the disconnected compressor, there is a leak from the SV3A valve. Replace the part.
Leakage of SV3B valve	H	6) Then manually open the SV3A valve. If gas escapes from the suction pipe section of the disconnected compressor, there is a leak from the SV3B valve. Replace the part.
Clogging of SV3D valve Clogging of oil-return capillary Clogging of oil-return distributor	J	7) With pressure applied to the check joint of discharge pipe with nitrogen, manually open the SV3D valve. If gas does not escape from the suction pipe section of the disconnected compressor, the SV3D valve, oil-return capillary or oil-return distributor is clogged. Replace the part.

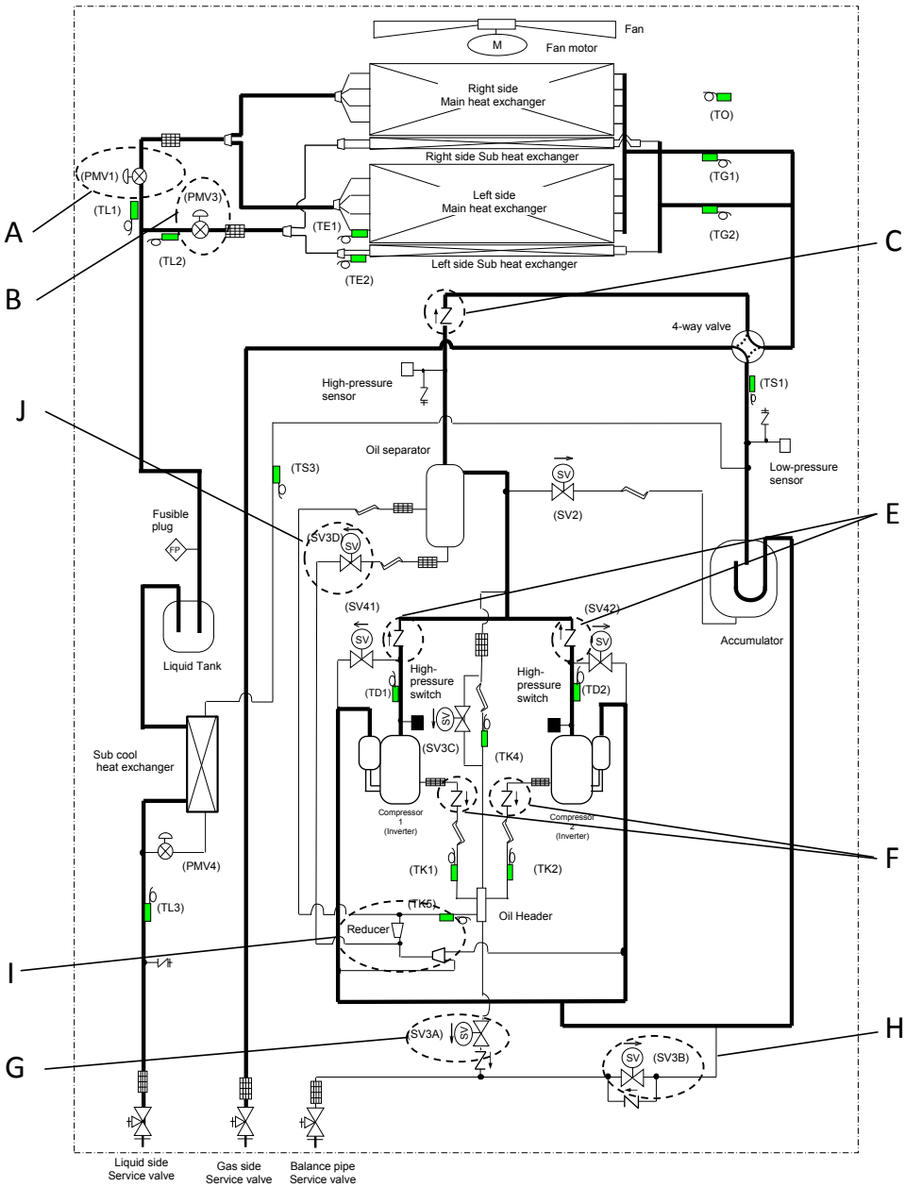

<MMY-MAP1806∗, MAP2006∗, and MAP2206>

Check items and procedures to follow when checking oil circuit with compressor(s) disconnected

Check item	Location	Procedure
Leakage of outdoor PMV Leakage of check valve in discharge pipe convergent section	A,B	1) With PMV1 and 3 fully closed, apply pressure to the check joint of liquid pipe with nitrogen, and check the pressure at the check joint of discharge pipe. If the pressure at the check joint of discharge pipe increases, there is a leak from PMV1(A) or 3(B) and check valve of discharge pipe (C). Replace the faulty parts. 2) If the pressure does not increase, fully open outdoor PMV1 and 3 and check the pressure at the check joint of discharge pipe again. If the pressure increases, there is a leak from the check valve of discharge pipe (C). Replace the part.
Leakage of check valve in discharge pipe	E	3) With pressure applied to the check joint of discharge pipe with nitrogen, if gas escapes from the discharge pipe section of the disconnected compressor, there is a leak from the check valve of discharge pipe (E). Replace the part.
Leakage of check valve in oil equalization circuit	F	4) With pressure applied to the check joint of discharge pipe with nitrogen, if gas escapes from the oil equalization pipe section of the disconnected compressor, there is a leak from the oil equalization pipe check valve (F). Replace the part.
Leakage of SV3A valve	G	5) With pressure applied to the check joint of discharge pipe with nitrogen, manually open the SV3B valve. If gas escapes from the suction pipe section of the disconnected compressor, there is a leak from the SV3A valve. Replace the part.
Leakage of SV3B valve	H	6) Then manually open the SV3A valve. If gas escapes from the suction pipe section of the disconnected compressor, there is a leak from the SV3B valve. Replace the part.
Clogging of SV3D valve Clogging of oil-return capillary Clogging of oil-return distributor	J	7) With pressure applied to the check joint of discharge pipe with nitrogen, manually open the SV3D valve. If gas does not escape from the suction pipe section of the disconnected compressor, the SV3D valve, oil-return capillary or oil-return distributor is clogged. Replace the part.

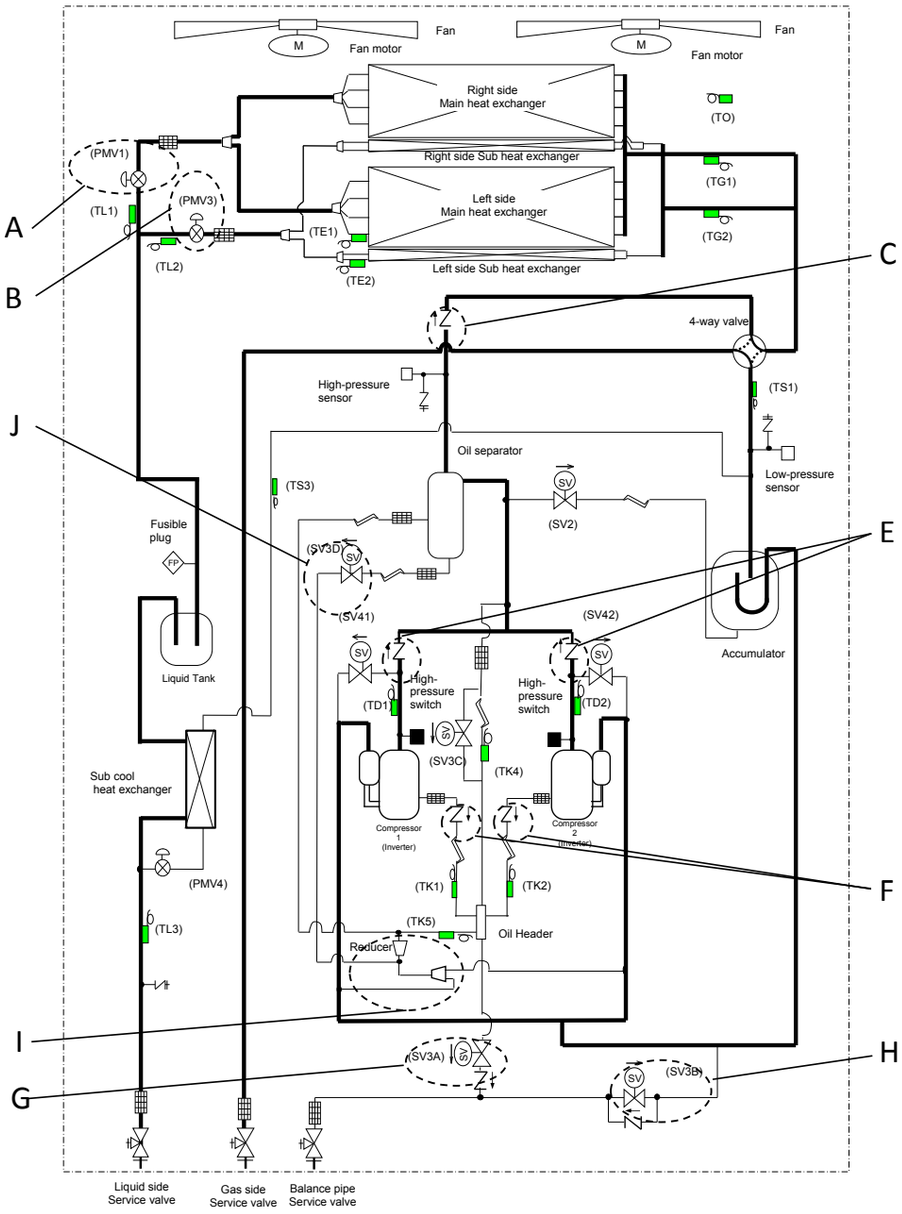

12 OUTDOOR UNIT PARTS REPLACEMENT METHODS

No.	Part to be replaced	Work procedure	Remarks
1	Cabinet	**⚠ WARNING** **Wear a pair of gloves.** **Otherwise, you will risk an injury involving a replacement part or some other object.** **1. Detachment** 1) Stop the air conditioner operation, and turn off the circuit breaker. 2) Remove the screws for the discharge cabinet. (M5 × 16, 4 pcs.) With a MAP1406∗, 1606∗, 18B6∗ type, the discharge cabinet side covers need to be removed. Left and right: (M5 × 16, 2 pcs.) - 2 sets Remove the two discharge cabinets for MAP 1806∗, 2006∗, 2206∗ type. 3) Remove the screws for the lower cabinet. Front and rear: (M5 × 10, 7 pcs. for front and 6 pcs. for rear) Remove the two front lower cabinets and two rear lower cabinets for MAP1806∗, 2006∗, 2206∗, type. (M5 x 10, 13 pcs (Front) M5 x 10, 10 pcs (Rear) 4) Remove the screws for the service panel. (M5 × 10, 2 pcs.) 5) Remove the screws for the suction cabinet. Front and rear: (M5 × 10, 4 pcs. each) In the case of a MA 1406∗, 1606∗, 18B6∗ type: M5x10, 5 pcs. each Remove the two front discharge cabines and two rear discharge cabinets for MAP 1806∗, 2006∗, 2206∗ type. (M5 x 10, 9 pcs (Front) M5 x 10, 9 pcs (Rear) 6) Remove the screws for the discharge cabinet side cabinet. Left and right: (M5 × 10, 6 pcs. each) Remove the two front support plates and two rear support plates for MAP1806∗, 2006∗, 2206∗ type. (M5 x 10, 6 pcs) - 2 set **2. Attachment** Carry out installation by following the detachment procedure in reverse (6) → 1)). Be careful of the hooks provided on the suction cabinet, service panel and lower cabinet.	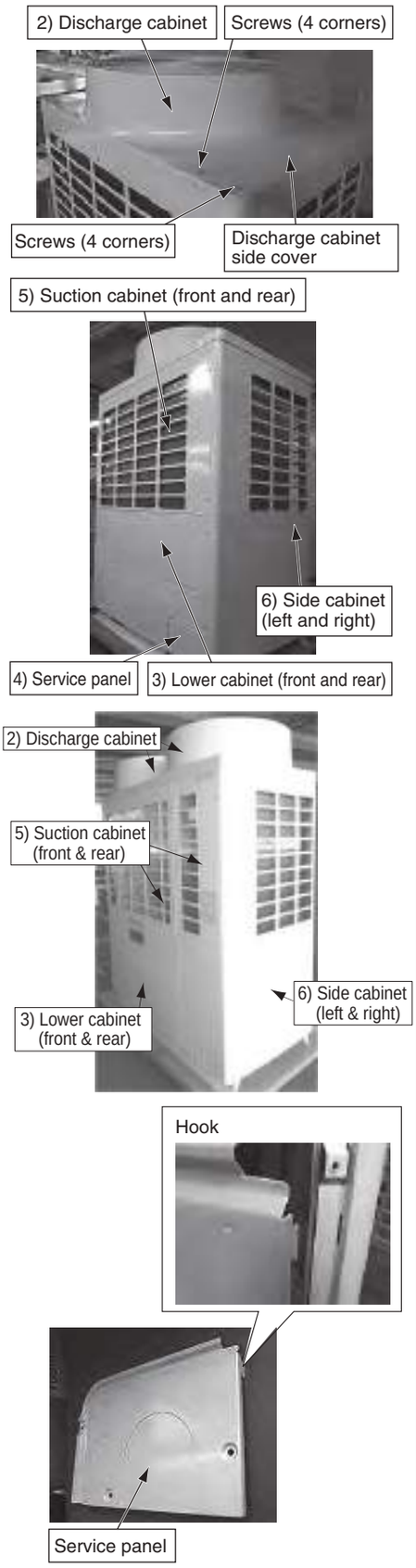

No.	Part to be replaced	Work procedure	Remarks
2	Propeller fan Fan motor	**⚠ WARNING** **Wear a pair of gloves.** **Otherwise, you will risk an injury involving a replacement part or some other object.** **1. Detachment** 1) Stop the air conditioner operation, and turn off the circuit breaker. 2) Remove the screws for the discharge cabinet. (M5 × 10, 4 pcs.) 3) Remove the heat exchanger partition plate (upper). (M5 × 10, 2 pcs.) * With a MAP1406∗, 1606∗, 18B6∗ type, the fan motor can be replaced without removing the discharge cabinet side covers. 4) Remove the flange nut securing the fan motor and propeller fan. (To loosen the nut, turn it clockwise.) 5) Remove the square washer. 6) Remove the propeller fan. **⚠ CAUTION** **Lift it straight up.** **Do not forcibly pull it, or it may get stuck.** 7) Disconnect the Faston connectors for the fan motor leads (3 pieces) from the Fan IPDU, and pull the leads up and out. 8) Remove the fan motor. (M6 × 20, 4 pcs.) • As for MAP1806∗, 2006∗, 2206∗ type, the number of Fan, Fan motor, Motor base, Flange nut, Washer and Fan P.C Board are twice compare to MAP0806∗, 1006∗, 1206∗, 14B6∗1406∗, 1606∗, 18B6∗ type because 2 Fans are equipped.	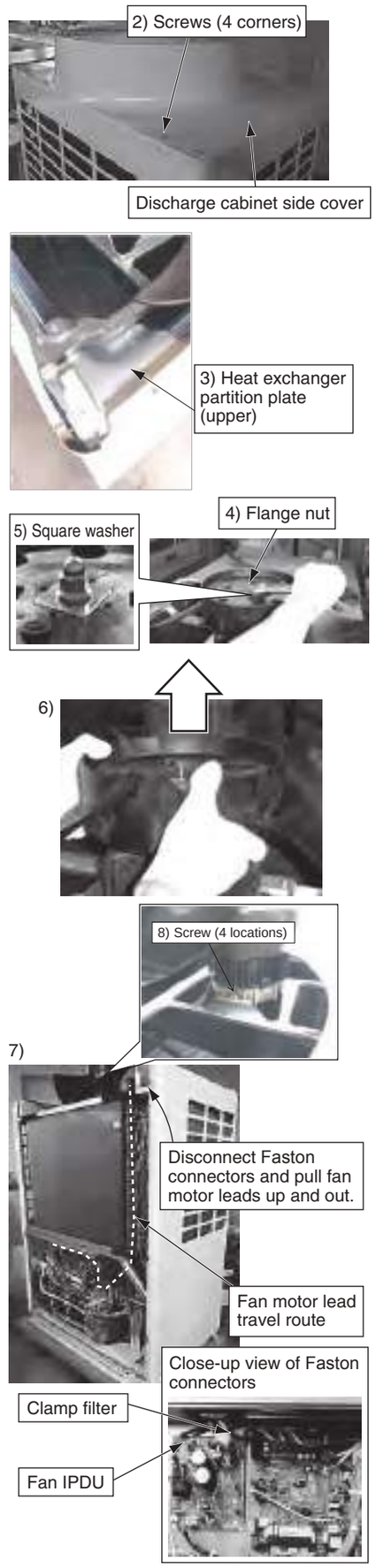

No.	Part to be replaced	Work procedure	Remarks
2	Propeller fan Fan motor (continued)	**2. CAUTION for replacement or attachment** 1) Insert the propeller fan while aligning the D-cut surface of the fan motor shaft with the arrow mark (△) on the fan. (If the propeller fan is tightly mounted on the shaft without securing alignment between the D-cut surface and the arrow mark (△), it may cause the fan to melt and fall off due to friction heat.) 2) Be sure to put the square washer in place. (Otherwise, unusual noises and vibrations may result.) 3) Tighten the flange nut at a torque of 15N•m (153kgf•cm). (To tighten the flange nut, turn it counterclockwise.) 4) Remove the clamp filter from the fan motor with trouble, then attach the clamp filter to the substitution in the same way as before replacement. (Turn through the fan motor lead once around the clamp filter.) • Apply the same procedure again for MAP 1806∗, 2006∗, 2206∗, type unit to replace another clamp filter.	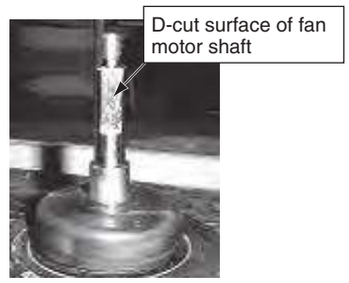 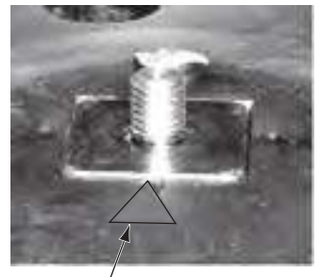 Arrow mark (△) of fan To be aligned with D-cut surface 4) Clamp filter MAP0806∗, 1006∗, 1206∗, 14B6∗, 1406∗, 1606∗, 18B6∗ type 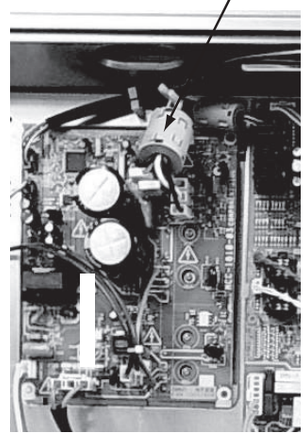 MAP 1806*,2006*, 2206* type 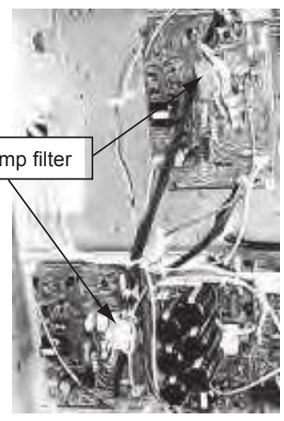

No.	Part to be replaced	Work procedure	Remarks
3	Heat exchanger	**⚠ WARNING** **Wear a pair of gloves.** **Otherwise, you will risk an injury involving a replacement part or some other object.** Before the work, be sure to recover the refrigerant of outdoor unit into cylinders or another unit connected to the same system. (Refer to the chapter on “refrigerant recovery methods to be used during compressor replacement”.) **1. Detachment (Right-Side Heat Exchanger as Example)** 1) Remove the cabinet. 2) Remove the motor base. (M5 × 10, 6 pcs.) Remove the two motor motor bases for MAP 1806∗, 2006∗, 2206∗ type (M5 x 10, 6 pcs) - 2 set (Detach the fan motor leads as well.) With a MAP1406∗, 1606∗, 18B6∗ type remove the discharge cabinet anchor plates. Left and right: (M5 × 10, 2 pcs.) - 2 sets With MAP1806∗, 2006∗, 2206∗ type remove the discharge cabinet anchor plate. (M5 x 10, 2 pcs) 3) Remove the upper partition plate. (M5 × 10, 5 pcs.) 4) Remove the screws for the support post. (M5 × 10, 2 pcs.) 5) Remove the screws for the waterproof board. (M4 × 10, 2 pcs.) 6) Remove the brazed joints of the piping connected (2 locations). With a MAP 1406∗, 1606∗, 18B6∗, 1806∗, 2006∗, 2206∗ type also remove the brazed joints of the piping connected to the sub-heat exchanger (2 locations). 7) Remove the screws for the heat exchanger end plate and pull the heat exchanger out. (M5 × 10, 2 pcs.)	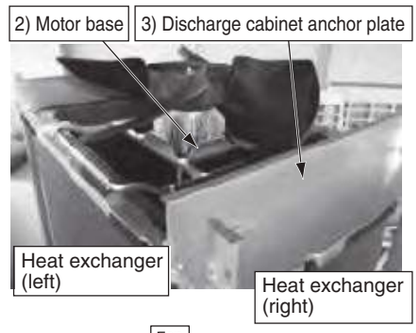 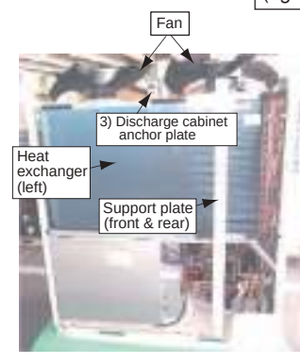 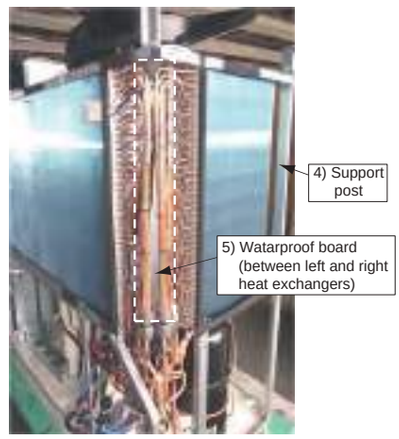 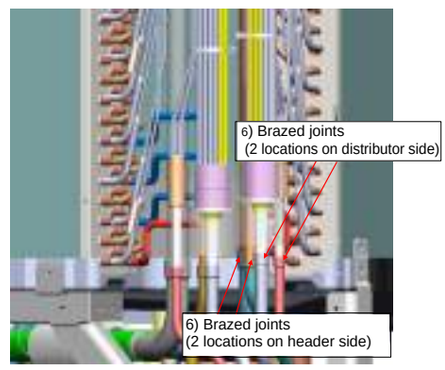 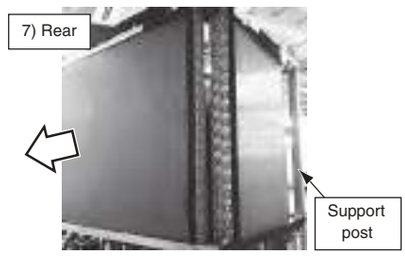 Pull heat exchanger out of rear end. (Left-side heat exchanger is pulled out of front end.)

No.	Part to be replaced	Work procedure	Remarks
4	Inverter assembly	**⚠ WARNING** **Wear a pair of gloves.** **Otherwise, you will risk an injury involving a replacement part or some other object.** **1. Detachment** 1) Stop the air conditioner operation, and turn off the circuit breaker. 2) Remove the inverter cover. (M4 × 10, 2 pcs.) 3) Remove the wiring. (e.g. the power supply wire, compressor leads, coils, sensors and heaters) 4) Steps only applicable to a MAP1406∗, 1606∗, 18B6∗,1806∗, 2006∗, 2206∗ type • Remove the reactor lead cover. (M4 × 10, 1 pc.) • Remove the screws securing the box. (M4 × 10, 1 pc.) • Detach the reactor leads. (4 terminal block bolts) 5) Remove the screws securing the box. (M5 × 10, 1 pc. each for top and bottom) In the case of a MAP1406∗, 1606∗, 18B6∗, 1806∗, 2006∗, 2206∗ type: M5 × 10, 3 pcs. for top and 2 pcs for bottom 6) Disengage the hook by gently pressing down the locking lever with your finger. (The lower part of the box moves forward.) 7) Hold the top board with both hands to disengage the top hook. **2. Attachment** Carry out installation by following the dismantling procedure in reverse (7) → 1)). Before pushing the lower part in, pull the reactor leads out. Take care so that the wiring does not get caught in the way. Reconnect all the wiring.	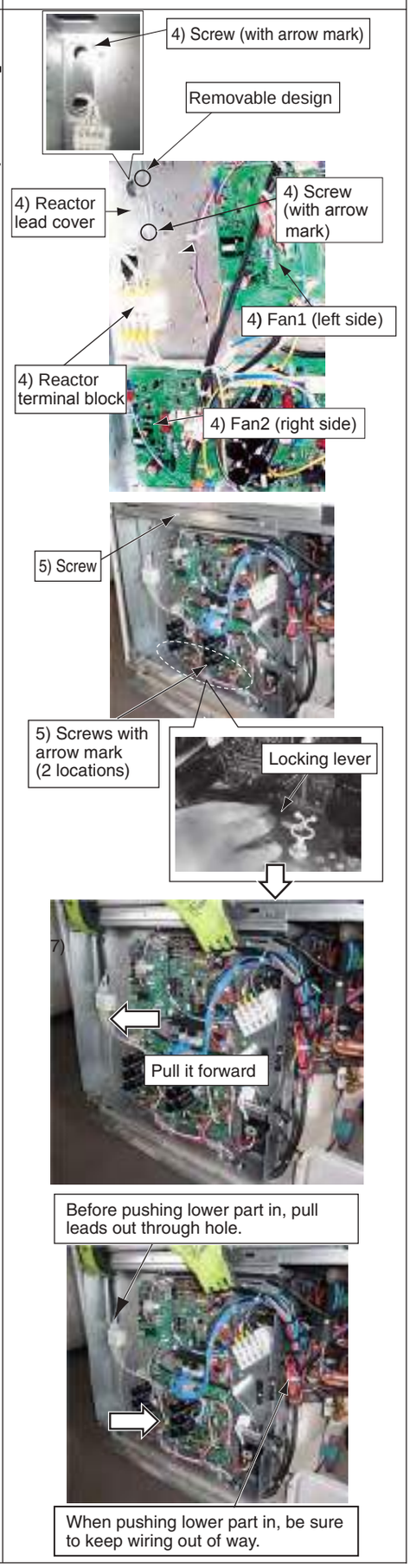

No.	Part to be replaced	Work procedure	Remarks
5	Reactor assembly	**⚠ WARNING** **Wear a pair of gloves.** **Otherwise, you will risk an injury involving a replacement part or some other object.** **1. Detachment** 1) Stop the operation, and turn off the circuit breaker. 2) Remove the inverter assembly. (See the inverter assembly dismantling method under item 4.) 3) With a MAP 1406∗,1606∗, 18B6∗,1806∗, 2006∗, 2206∗ type , remove the separately mounted reactor box. To remove the reactor box, remove the screws at the top and bottom (M5 × 10) and unlock the box by sliding the stopper to the right. * Before pulling the reactor box, tilt it back to free the bottom. 4) Remove the reactor box located at the back of the inverter assembly. (M4 × 6, 4 pcs.) * The screws can be removed from the front. With a MAP1406∗, 1606∗, 18B6∗, 1806∗, 2006∗, 2206∗ type remove the separately mounted anchor plate. (M4 × 6, 4 pcs.) 5) Remove and replace the reactor. (M4 × 6, 1 pc.)	• MAP1406∗, 1606∗, 18B6∗,1806∗, 2006∗, 2206∗ type 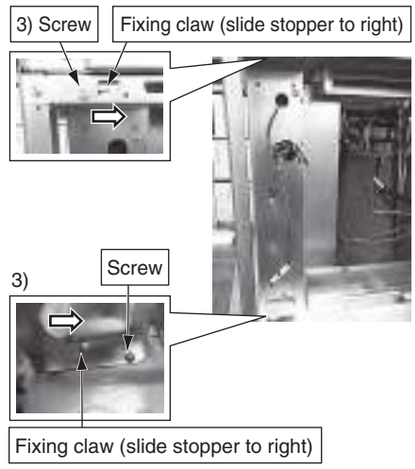 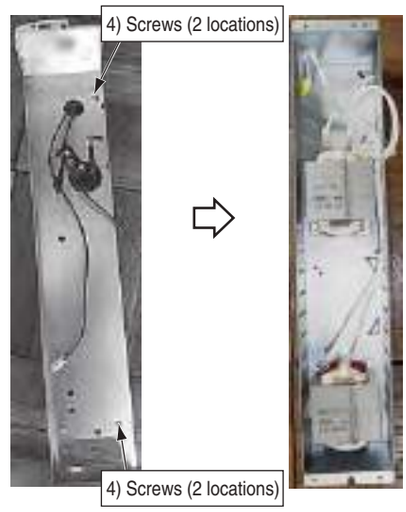 • MAP0806∗, 1006∗, 1206∗, 14B6∗, 1406∗, 1606∗, 18B6∗ type

For HT8(J)P, HT7(J)P, HT8(J)P-ME, HT7P-ME, T8(J)P-E, HT8P-A, HT8P-C model

No.	Part to be replaced	Work procedure	Remarks
6	2-way valve coils Pressure sensors locations MAP0806* MAP1006* MAP1206*	Rear 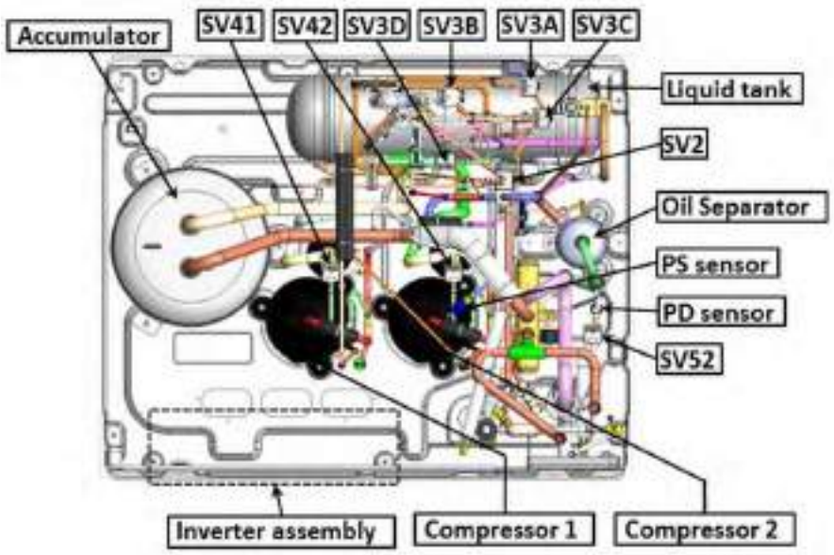 Front	
	MAP1406* MAP1606*	Rear 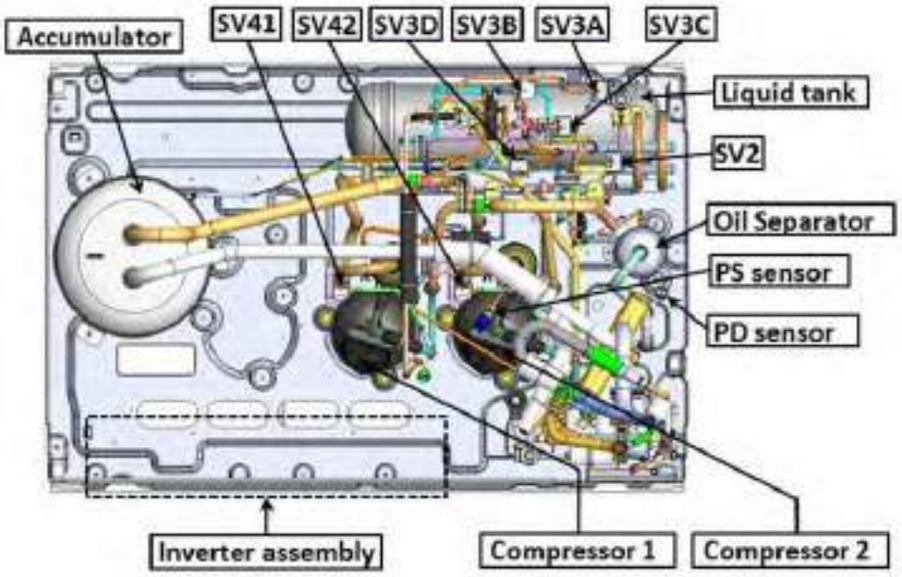 Front	
	MAP1806* MAP2006* MAP2206*	Rear 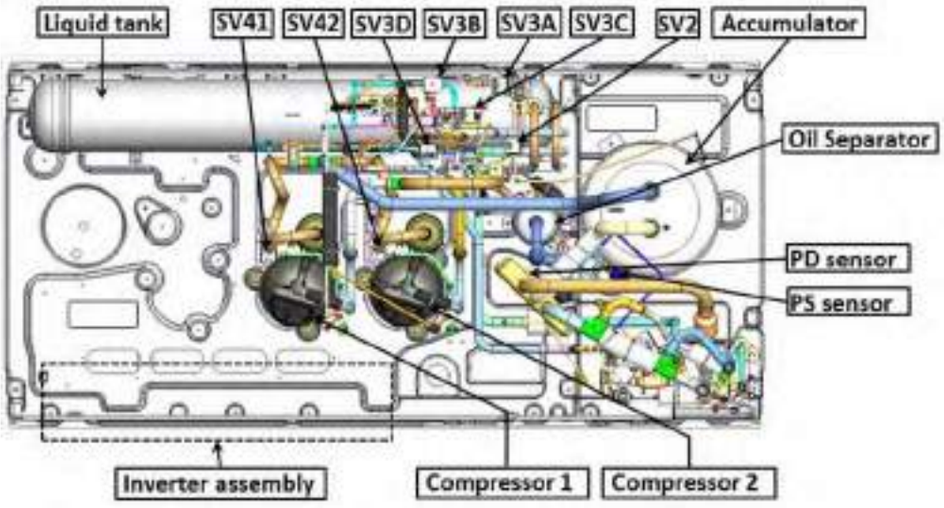 Front	

(For HT8(J)P-E, HT8(J)P-TR model)

No.	Part to be replaced	Work procedure	Remarks
6	2-way valve coils Pressure sensors locations MAP0806* MAP1006* MAP1206*	Rear 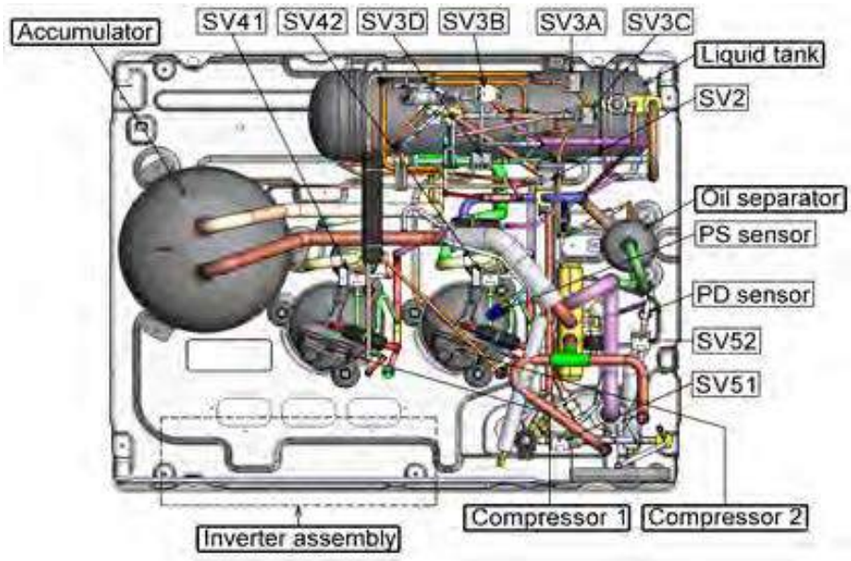 Front	
	MAP1406* MAP1606*	Rear 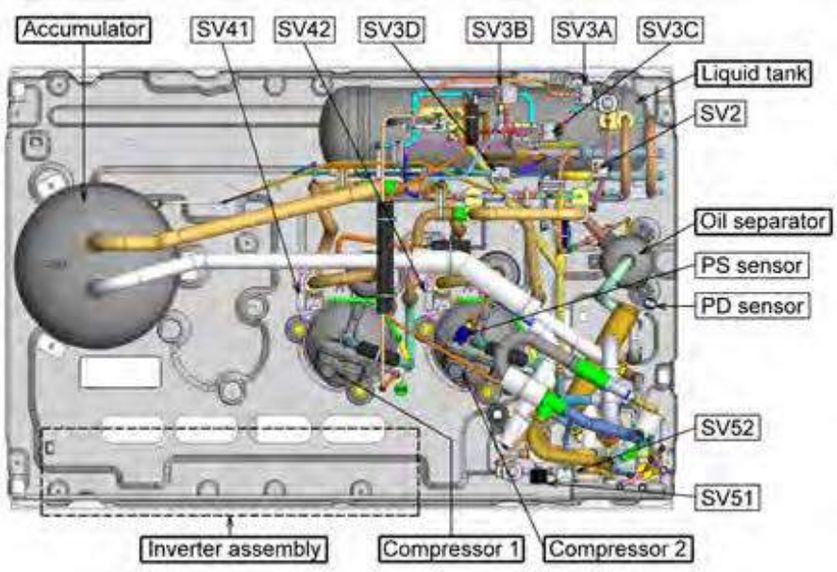 Front	
	MAP1806* MAP2006* MAP2206*	Rear 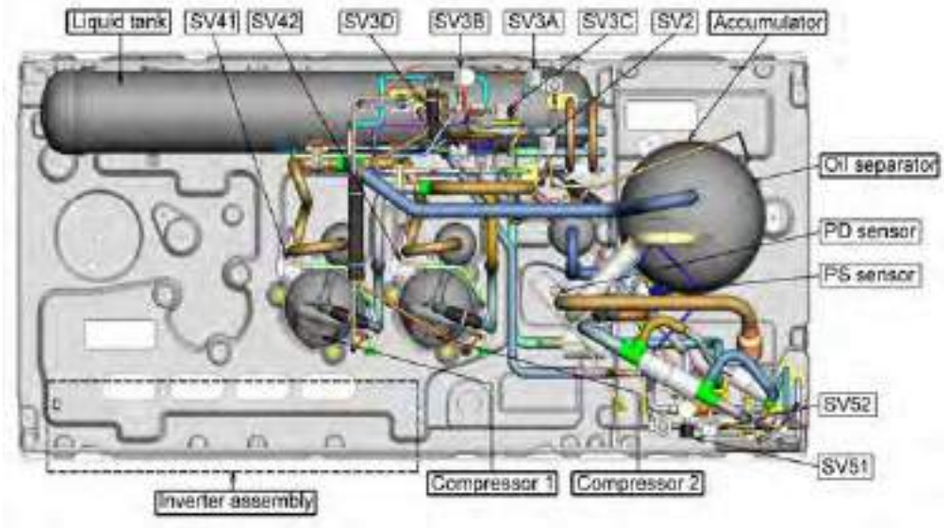 Front	

(For T8(J)P, T7(J)P, T8P-SG, T8(J)P-ID, T8(J)P-T model)

No.	Part to be replaced	Work procedure	Remarks
6	2-way valve coils Pressure sensors locations MAP0806* MAP1006* MAP1206* MAP14B6*	Rear 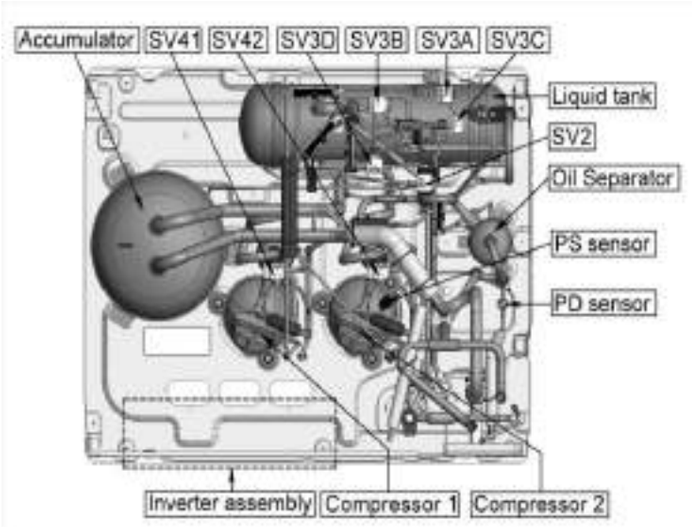 Front	
	MAP1406* MAP1606* MAP18B6*	Rear 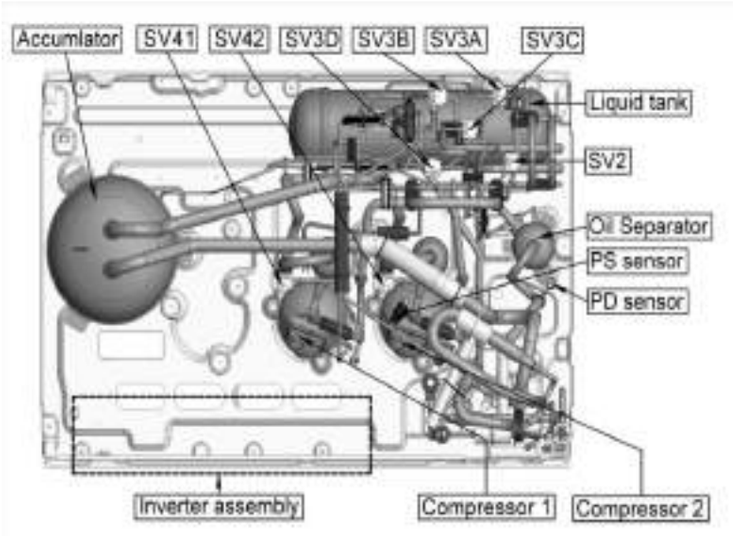 Front	
	MAP1806* MAP2006* MAP2206*	Rear 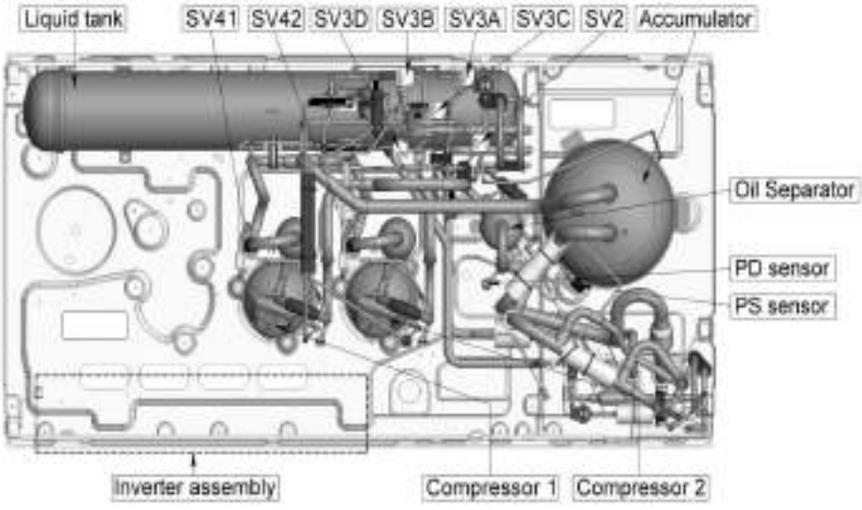 Front	

No.	Part to be replaced	Work procedure	Remarks
7	Temperature sensors - locations and idenfication colors MAP0806* MAP1006* MAP1206* MAP14B6*	**Product front view** 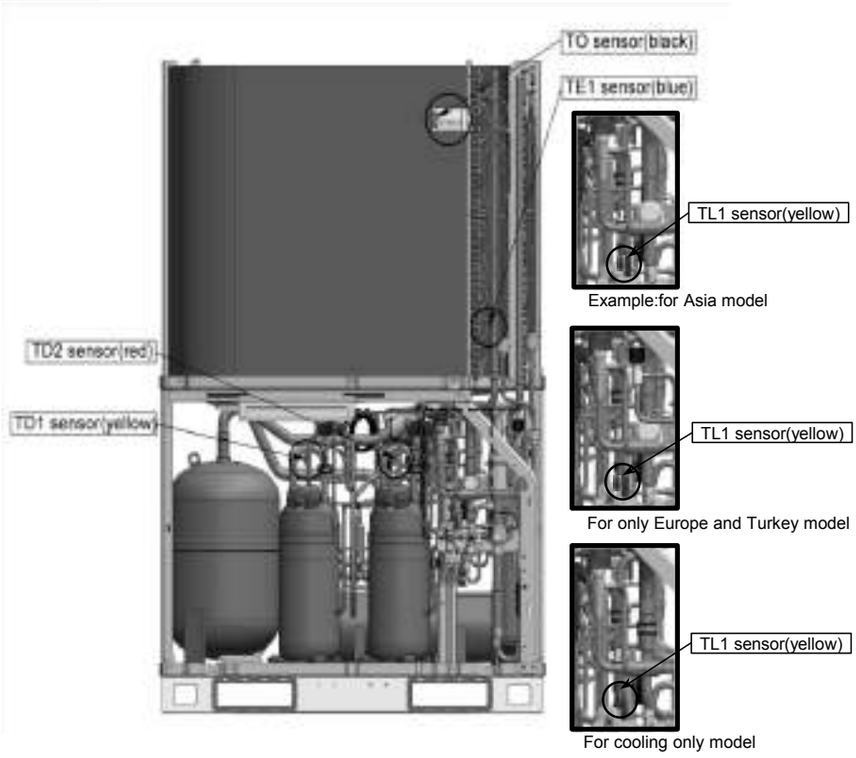 	
		Product rear view 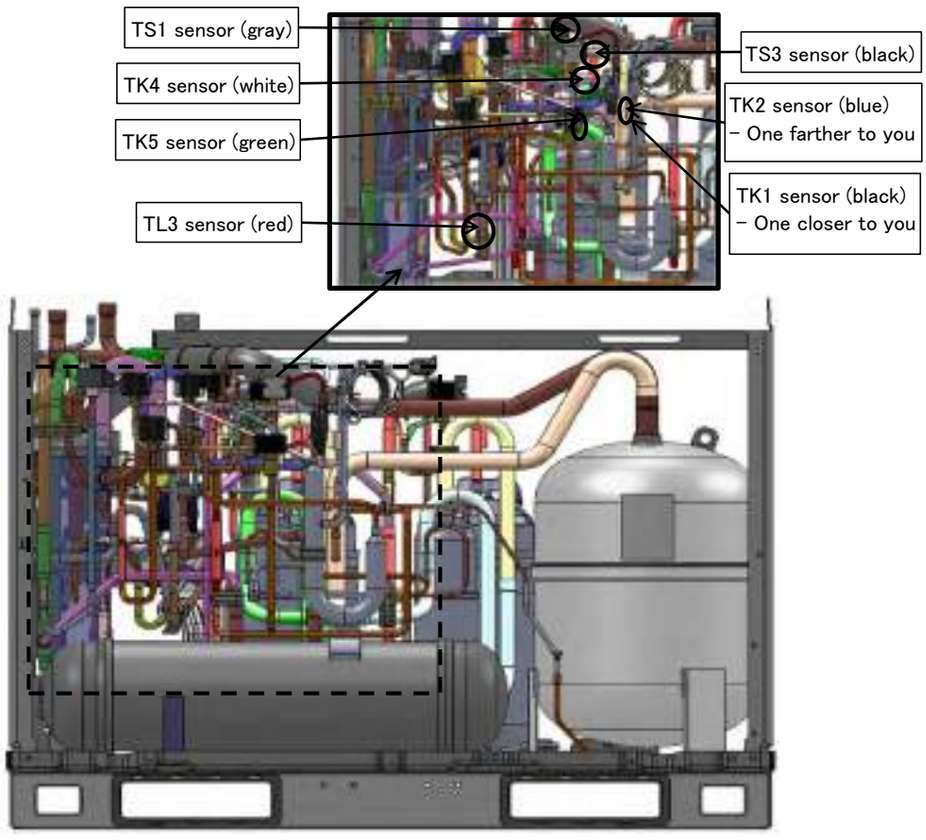 	

No.	Part to be replaced	Work procedure	Remarks
7	Temperature sensors - locations and idenfication colors MAP1406* MAP1606* MMP18B6*	**Product front view** 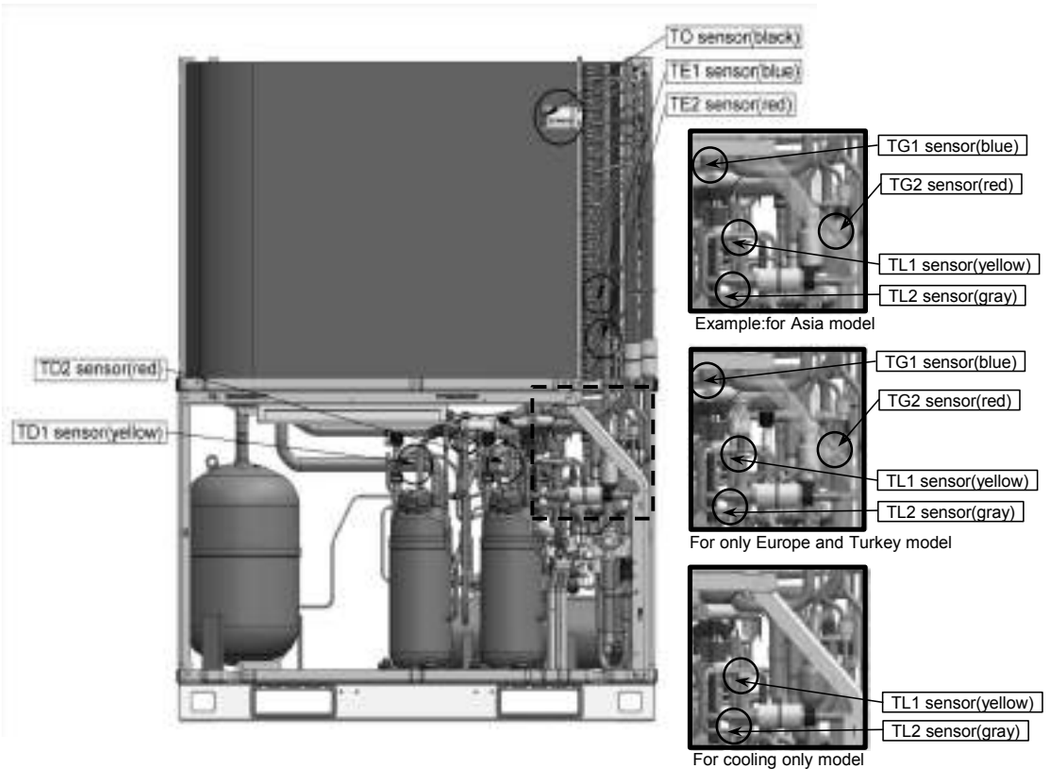 	
		Product rear view 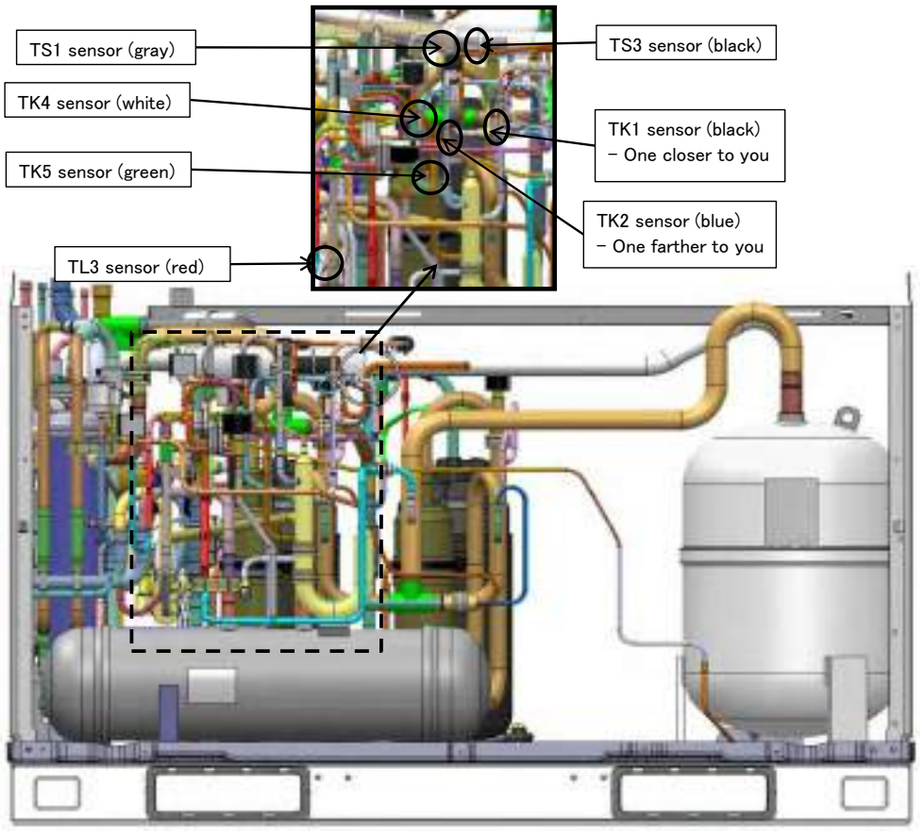 	

No.	Part to be replaced	Work procedure	Remarks
7	Temperature sensors - locations and idenfication colors MAP1806* MAP2006* MAP2206*	**Product front view** 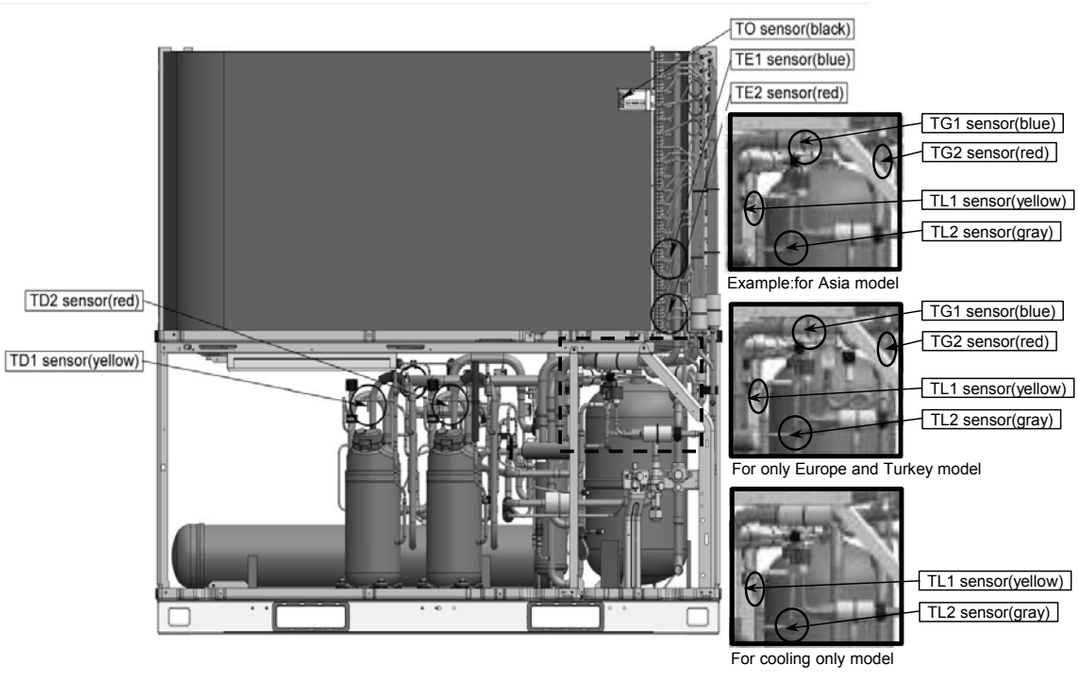 	
		Product rear view 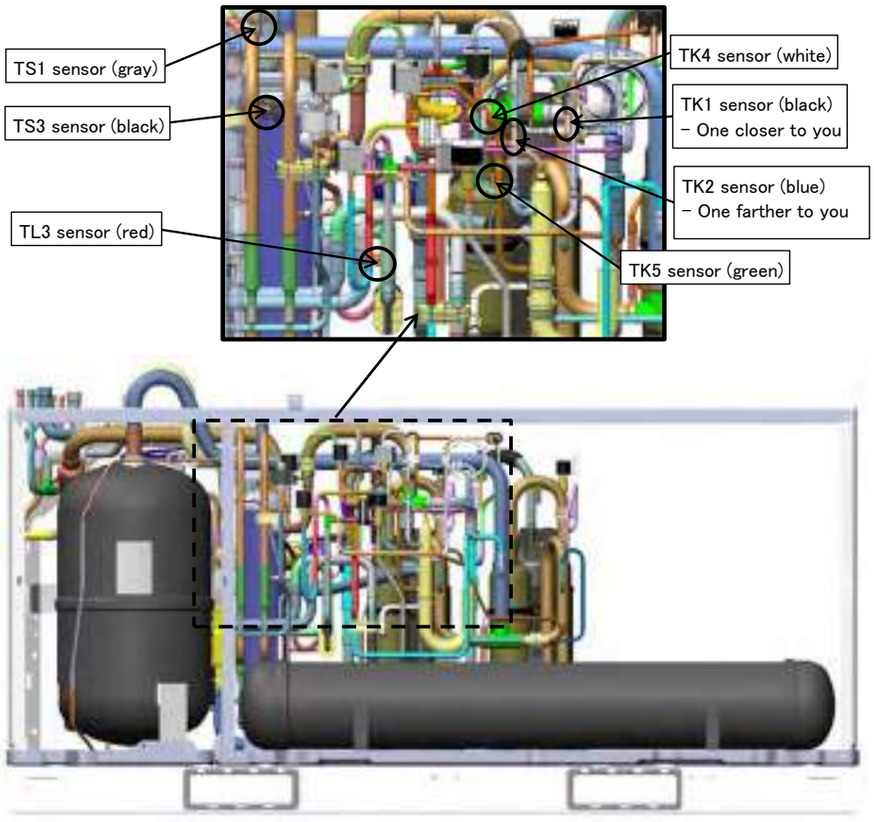 	

(For HT8(J)P, HT7(J)P, HT8(J)P-ME, HT7P-ME, T8(J)P-E, HT8P-A, HT8P-C model)

No.	Part to be replaced	Work procedure	Remarks
8	Pipe fixing rubber - detachment/ attachment MAP0806* MAP1006* MAP1206*	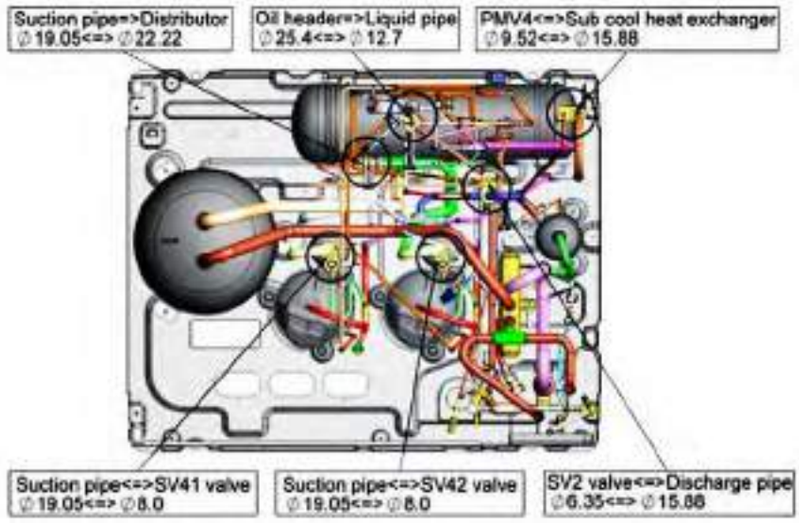	
	MAP1406* MAP1606*	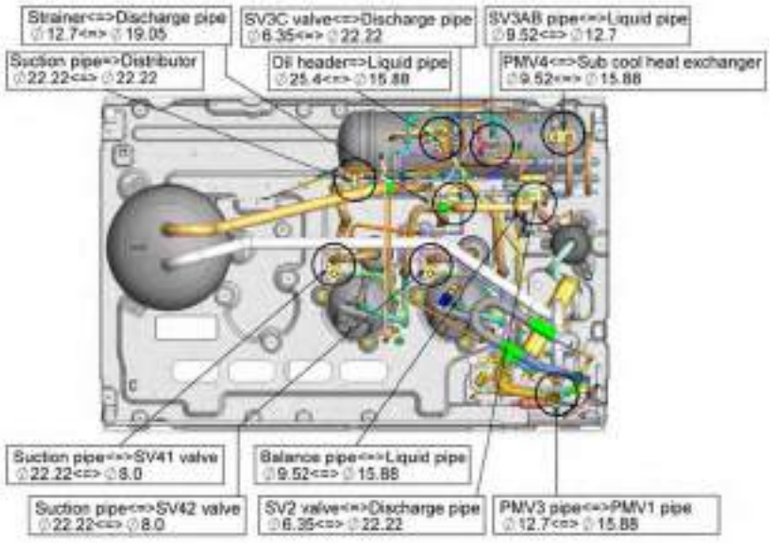	
	MAP1806* MAP2006* MAP2206*	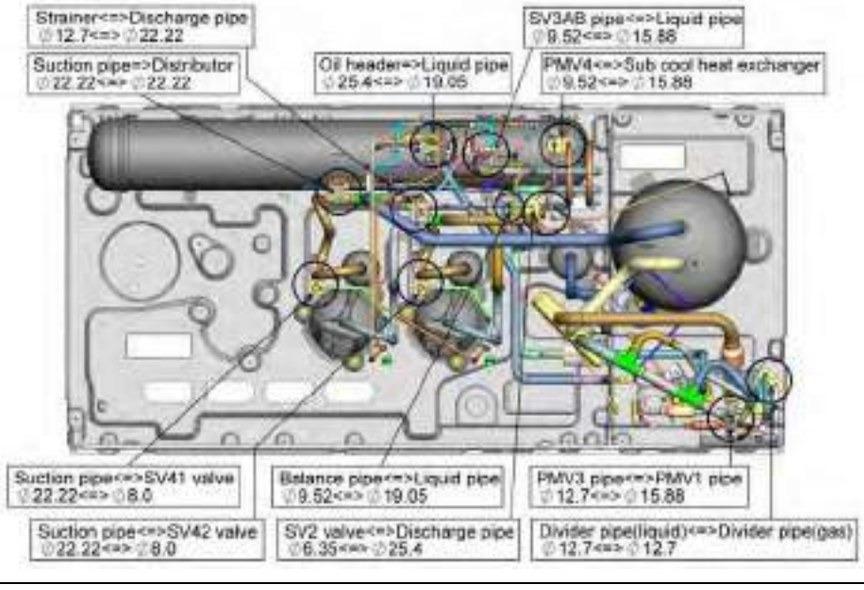	

(For HT8(J)P-E, HT8(J)P-TR model)

No.	Part to be replaced	Work procedure	Remarks
8	Pipe fixing rubber - detachment/ attachment MAP0806* MAP1006* MAP1206*	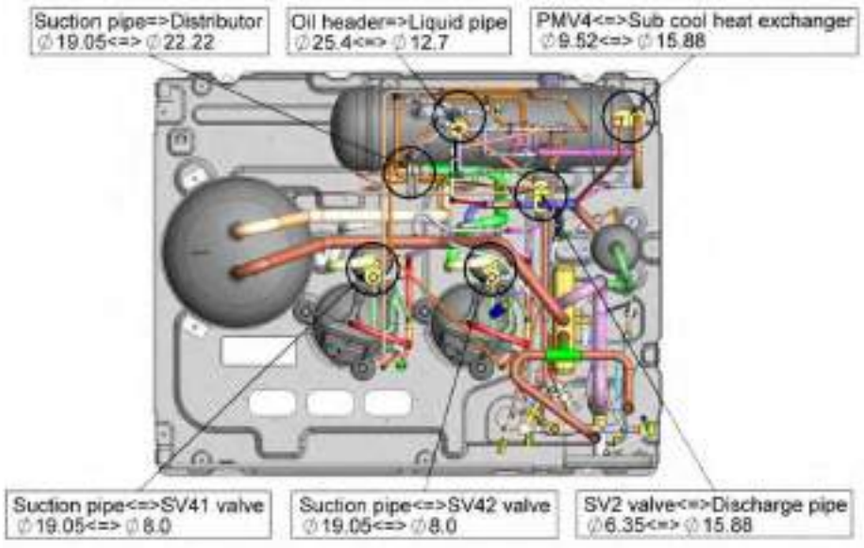	
	MAP1406* MAP1606*	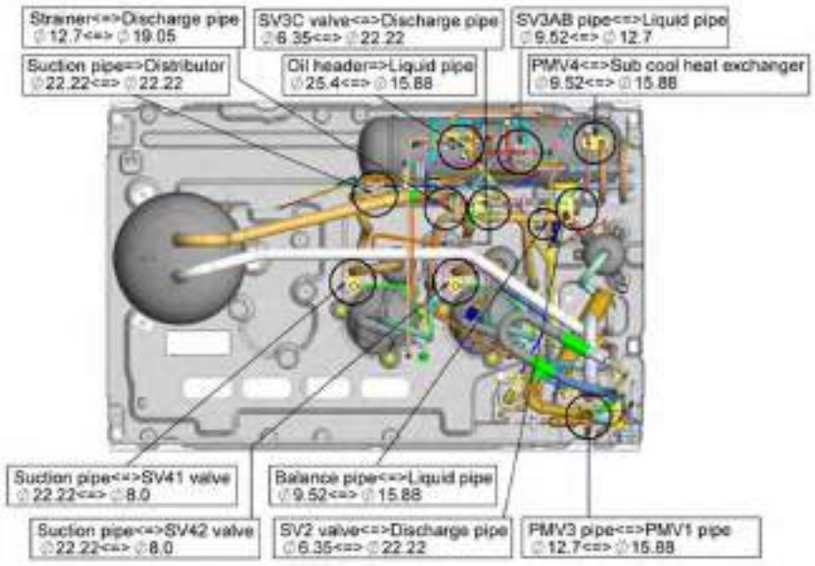	
	MAP1806* MAP2006* MAP2206*	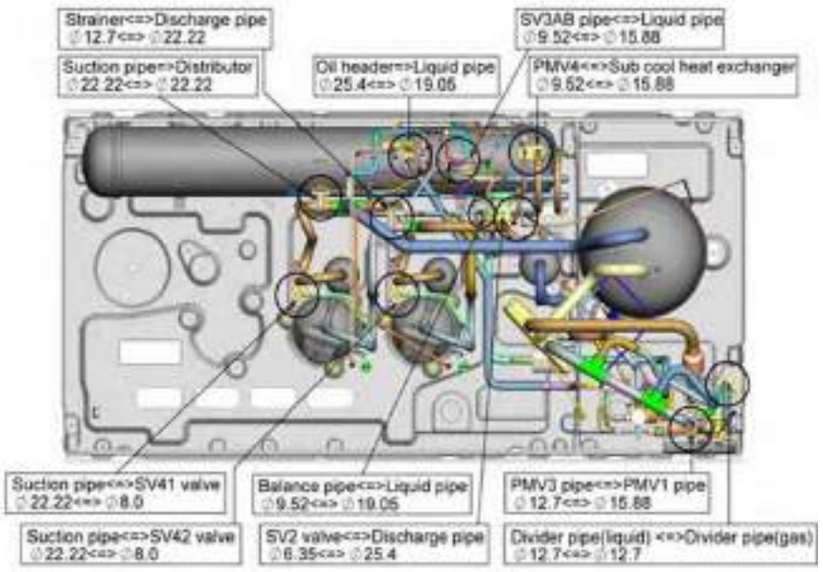	

(For T8(J)P, T7(J)P, 8P-SG, T8(J)P-ID, T8(J)P-T model)

No.	Part to be replaced	Work procedure	Remarks
8	Pipe fixing rubber - detachment/ attachment MAP0806* MAP1006* MAP1206* MAP14B6*	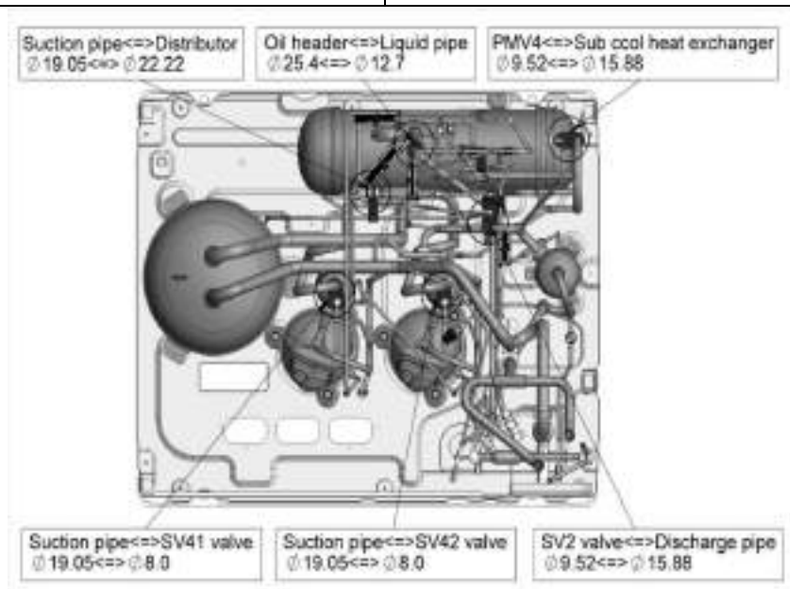	
	MAP1406* MAP1606* MAP18B6*	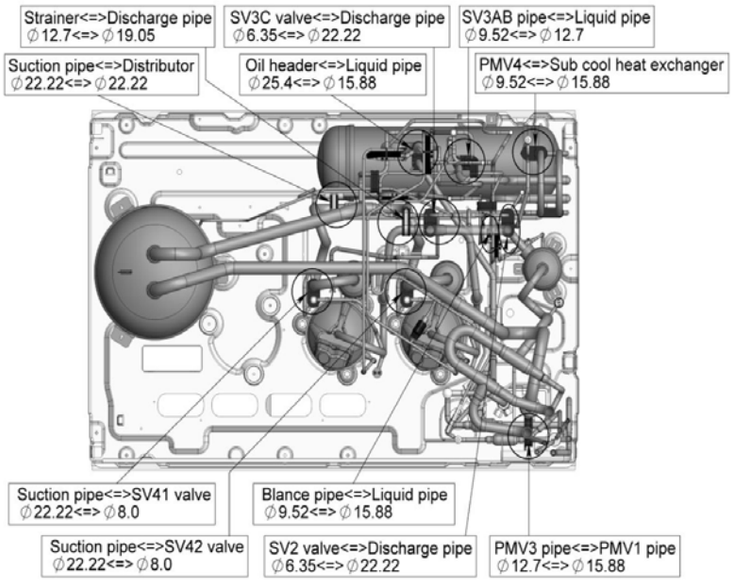	
	MAP1806* MAP2006* MAP2206*	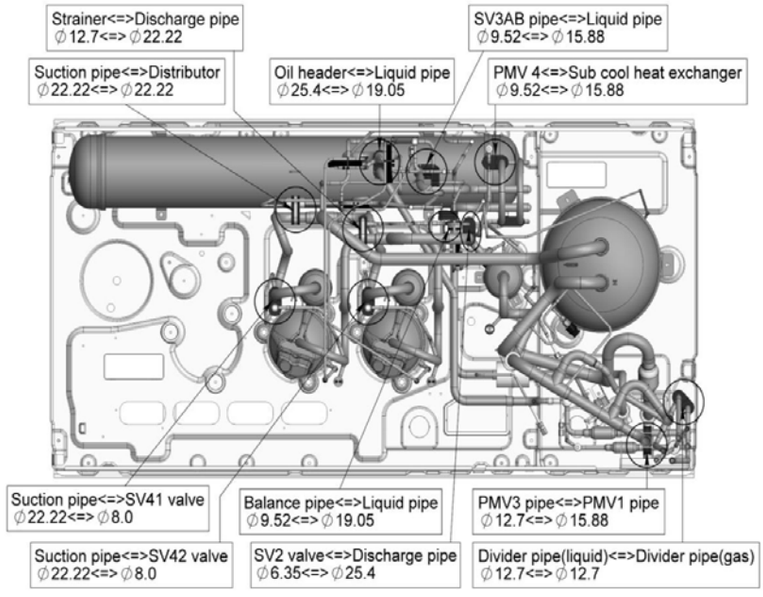	

No.	Part to be replaced	Work procedure	Remarks
8	Pipe fixing rubber - detachment/ attachment (common)	**⚠ WARNING** **Wear a pair of gloves.** **Otherwise, you will risk an injury involving a replacement part or some other object.** **1. Detachment** 1) Hold the pipe fixing rubber in such a manner that your fingers and thumb are in contact with the two longitudinal ends of the piece, and squeeze it a little to create a small gap between the rubber and the stainless steel band wrapped around it. 2) Push the hook end of the stainless steel band down to disengage the hook from the square hole. **2. Attachment** 1) The pipe fixing rubbers use a two-segment design to accommodate a wide range of pipe combinations. When installing them, therefore, it is recommended to first split them up into segments and pair the segments up only after placing them on pipes of matching sizes separately. In this regard, make sure that the mating tooth and slit of pairing segments face each other. 2) When placing an stainless steel band around pipe fixing rubber, make sure that the hook end of the stainless steel band coincides with the slit side of the rubber. (The band can be placed the other way around, but only at the expense of work efficiency.) 3) Place the stainless steel band tightly around the pipe fixing rubber so that there is no gap between them. Take utmost care not to create a gap over the curved section of the rubber where the hairpin side of the band is located. 4) While holding the rubber, press down the base of the hook lightly against the rubber, and engage the hook with the square hole by squeezing the curved section of the rubber where the square hole side of the band is located (see the arrow). (If the hook does not engage with the square hole, recheck whether there is a gap between the band and rubber.)	1) 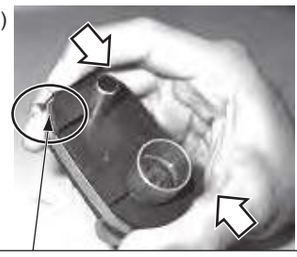 Squeeze rubber to create small gap. 2) Push band down in arrow direction. Place two segments of damper on pipes of matching sizes separately, making sure tooth and slit of pairing segments face each other. 1) Align tooth and slit and push two segments towards each other. 2) 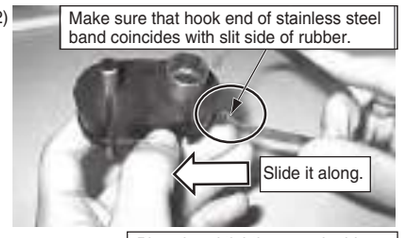 Make sure that hook end of stainless steel band coincides with slit side of rubber. Slide it along. 3) 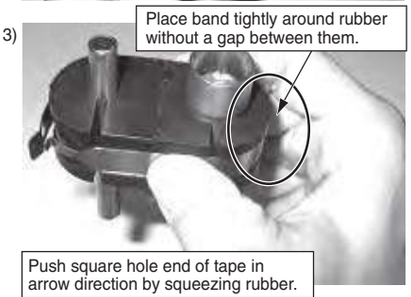 Place band tightly around rubber without a gap between them. Push square hole end of tape in arrow direction by squeezing rubber. 4) 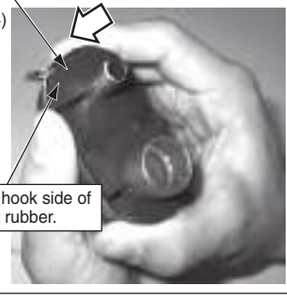 Press down hook side of tape against rubber.

No.	Part to be replaced	Work procedure	Remarks
9※)	4-way valve - detachment/ attachment MAP0806∗ MAP1006∗ MAP1206∗ ※) This process "N0.9" doesn't need for Cooling only models because it doesn't have 4-way valve.	**⚠ WARNING** **Wear a pair of gloves.** **Otherwise, you will risk an injury involving a replacement part or some other object.** Before starting the work, be sure to recover the refrigerant of outdoor unit by removing it with a refrigerant recovery device. **1. Detachment** 1) Remove the lower cabinet (front side). 2) Remove the inverter box in accordance with the dismantling instructions. 3) Disconnect the 4-way valve coil and PMV1 coil (1 piece) and SV51, 52 coils (2 pieces) and get all wiring located near the 4-way valve out of the way. 4) Remove brazed points (2 locations) for the PMV assembly, which is placed in front of the 4-way valve. * Provide adequate cover for the PMV to protect it from overheating. 5) Since it is difficult to simultaneously remove the brazed points for the pipes located above the 4-way valve (3 locations), cut through them just below the brazed points using a saw, etc. 6) Detach the pipe located below the 4-way valve. 7) Remove the end sections of the pipes above the 4-way valve, which were cut in step 5). 8) Install a new 4-way valve. * Provide adequate cover for the 4-way valve to protect it from overheating. During the installation, insert pipes firmly into the 4-way valve, or a blockage or leakage involving brazing filler metal may result. 9) Reinstall the PMV assembly, which was removed in step 4). * Provide adequate cover for the PMV to protect it from overheating. 10) Reinstall all the coils removed in step 3), and put the wiring back to its initial state. 11) Reinstall the inverter box in accordance with the installation instructions. 12) Reinstall the lower cabinet.	**For HT8(J)P, HT7(J)P, HT8(J)P, HT8(J)P-ME, HT7P-ME, T8(J)P-E, HT8P-A model** 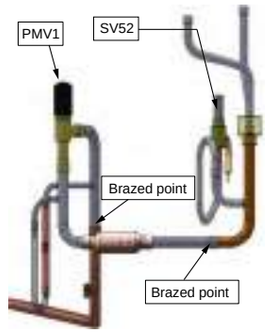 **For HT8(J)P-E, HT8(J)P-TR model** 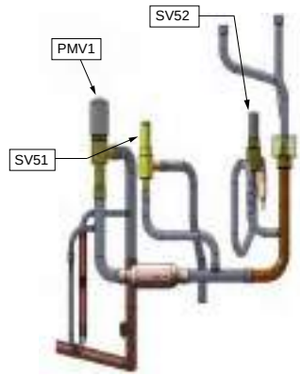 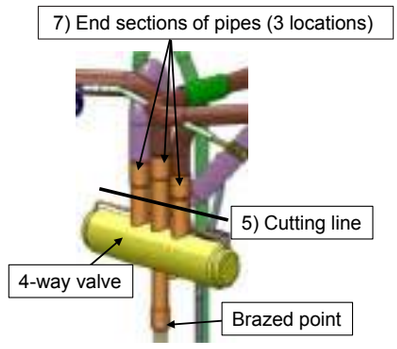

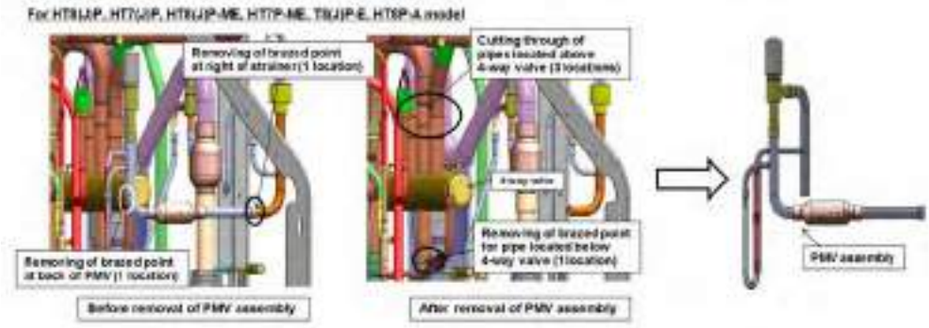

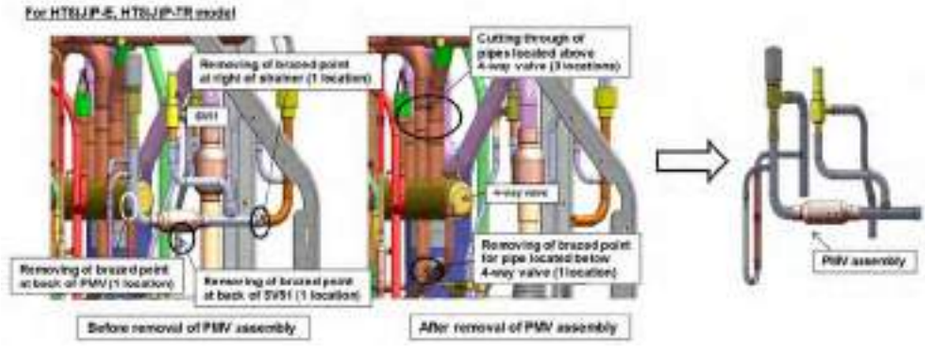

No.	Part to be replaced	Work procedure	Remarks
9※)	4-way valve - detachment/ attachment (continued) MAP1406∗ MAP1606∗ ※) This process "No.9" doesn't need for cooling only models because it doesn't have 4-way valve.	**⚠ WARNING** **Wear a pair of gloves.** **Otherwise, you will risk an injury involving a replacement part or some other object.** Before starting the work, be sure to recover the refrigerant of outdoor unit by removing it with a refrigerant recovery device. **1. Detachment** 1) Remove the lower cabinet (front side). 2) Remove the inverter box in accordance with the dismantling instructions. 3) Disconnect the 4-way valve coil and PMV1, PMV3 coils (2 pieces) and SV51, 52 coils (2 pieces) and get all wiring located near the 4-way valve out of the way. 4) Remove brazed points (3 locations) for the PMV assembly, which is placed in front of the 4-way valve. * Provide adequate cover for the PMV proper to protect it from overheating. 5) Since it is difficult to simultaneously remove the brazed points for the pipes located above the 4-way valve (3 locations), cut through them just below the brazed points using a saw, etc. 6) Detach the pipe located below the 4-way valve. 7) Remove the end sections of the pipes above the 4-way valve, which were cut in step 5). 8) Install a new 4-way valve. * Provide adequate cover for the 4-way valve to protect it from overheating. During the installation, insert pipes firmly into the 4-way valve, or a blockage or leakage involving brazing filler metal may result. 9) Reinstall the PMV assembly, which was removed in step 4). * Provide adequate cover for the PMV to protect it from overheating. 10) Reinstall the PMV assembly, which was removed in step 3), and put the wiring back to its initial state. 11) Reinstall the inverter box in accordance with the installation instructions. 12) Reinstall the lower cabinet.	**For HT8(J)P, HT7(J)P, HT8(J)P-ME, HT7P-ME, T8(J)P-E, HT8P-A, HT8P-C model** 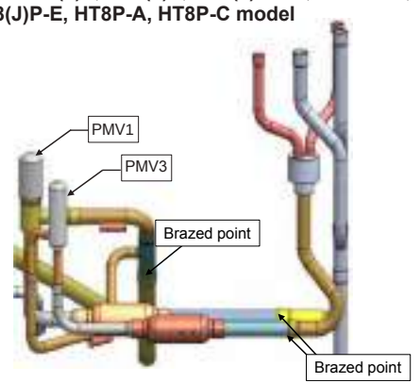 **For HT8(J)P-E, HT8(J)P-TR model** 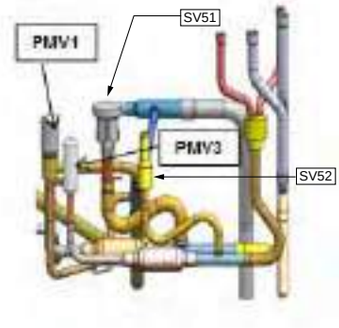 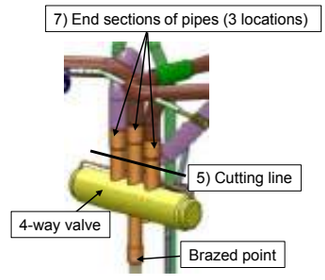

For HT8(J)P, HT7(J)P, HT8(J)P-ME, HT7P-ME, T8(J)P-E, HT8P-A, HT8P-C model

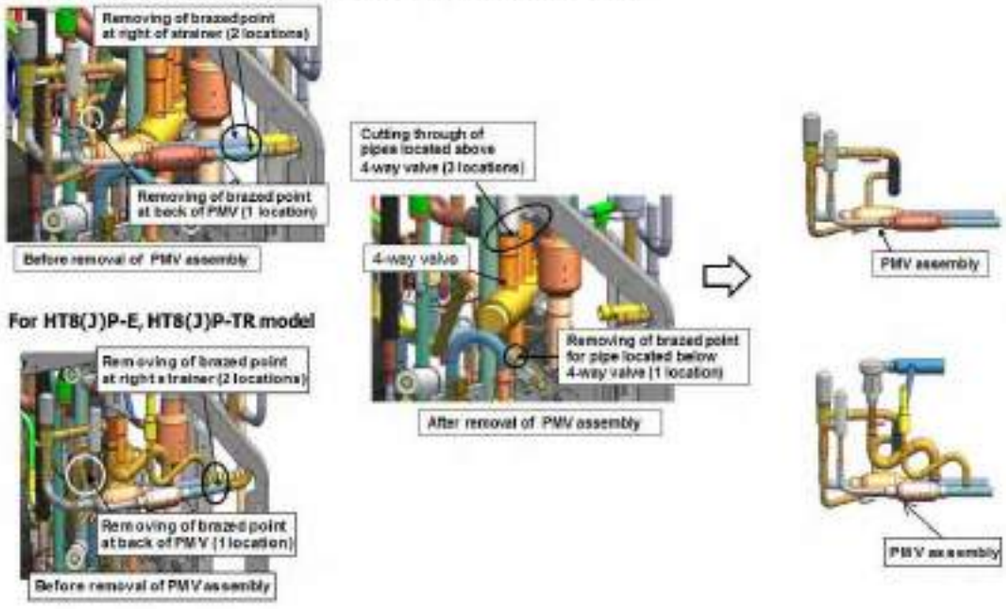

For HT8(J)P-E, HT8(J)P-TR model

No.	Part to be replaced	Work procedure	Remarks
9※)	4-way valve - detachment/ attachment (continued) MAP1806∗ MAP2006∗ MAP2206∗ ※) This process "No.9" doesn't need for cooling only models because it doesn't have 4-way valve.	**⚠ WARNING** **Wear a pair of gloves.** **Otherwise, you will risk an injury involving a replacement part or some other object.** Before starting the work, be sure to recover the refrigerant of outdoor unit by removing it with a refrigerant recovery device. **1. Detachment** 1) Remove the lower cabinet (left and right). 2) Remove the inverter box in accordance with the dismantling instructions. 3) Disconnect the 4-way valve coil and get all wiring located near the 4-way valve out of the way. 4) Since it is difficult to simultaneously remove the brazed points for the pipes located above the 4-way valve (3 locations), cut through them just below the brazed points using a saw, etc. 5) Detach the pipe located below the 4-way valve. 6) Remove the end sections of the pipes above the 4-way valve, which were cut in step 5). 7) Install a new 4-way valve. * Provide adequate cover for the 4-way valve to protect it from overheating. During the installation, insert pipes firmly into the 4-way valve, or a blockage or leakage involving brazing filler metal may result. 8) Reinstall all the coils removed in step 3), and put the wiring back to its initial state. 9) Reinstall the inverter box in accordance with the installation instructions. 10) Reinstall the lower cabinet.	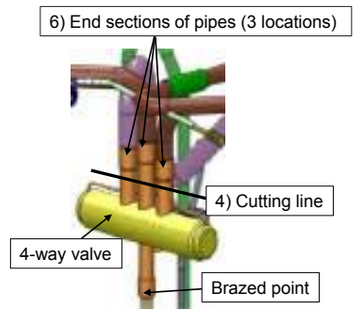

For HT8(J)P, HT7(J)P, HT8(J)P-ME, HT7P-ME, T8(J)P-E, HT8P-A, HT8P-C model

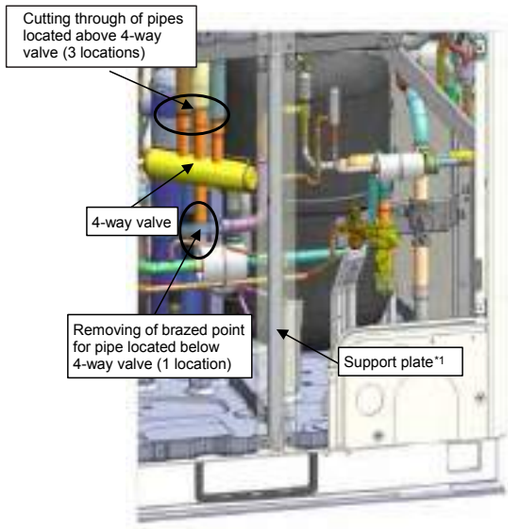

For HT8(J)P-E, HT8(J)P-TR model

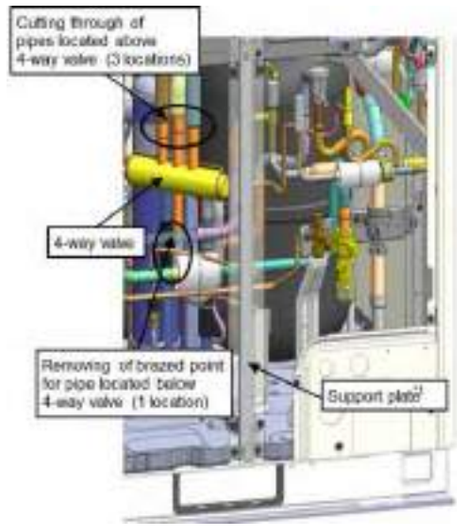

*1)Be careful for support-plate near the 4way-valve when conduct the replacement.

13 P.C. BOARD EXCHANGE PROCEDURES

■ Outdoor Unit

13-1. Replacement of outdoor P.C. board

13-1-1 List of service P.C. boards

Parts code	Description	Applicable model	P.C. board type code	Product code
43T6W410	Interface P.C. board	MMY-MAP0806∗ MMY-MAP1006∗ MMY-MAP1206∗ MMY-MAP14B6∗	MCC-1673	ASM-PCB(I/F)
43T6V628	Inverter P.C. board for compressor		MCC-1669	ASM-PCB(A3IPDU)
43T6V627	Inverter P.C. board for fan		MCC-1659	ASM-PCB(FANIPDU)
43T6V623	Noise filter P.C. board		MCC-1608-A,B	ASM-PCB(N/F)
43T6V646	Demand Response P.C. board (For MMY-MAP****HT8P-A)		MCC-1653	ASM-PCB(DRC)

Parts code	Description	Applicable model	P.C. board type code	Product code
43T6W410	Interface P.C. board	MMY-MAP1406∗ MMY-MAP1606∗ MMY-MAP18B6∗	MCC-1673	ASM-PCB(I/F)
43T6V629	Inverter P.C. board for compressor		MCC-1669	ASM-PCB(A3IPDU)
43T6V627	Inverter P.C. board for fan		MCC-1659	ASM-PCB(FANIPDU)
43T6V623	Noise filter P.C. board		MCC-1608-A,B	ASM-PCB(N/F)
43T6V646	Demand Response P.C. board (For MMY-MAP****HT8P-A)		MCC-1653	ASM-PCB(DRC)

Parts code	Description	Applicable model	P.C. board type code	Product code
43T6W410	Interface P.C. board	MMY-MAP1806∗ MMY-MAP2006∗ MMY-MAP2206∗	MCC-1673	ASM-PCB(I/F)
43T6V630	Inverter P.C. board for compressor		MCC-1660	ASM-PCB(A3IPDU)
43T6V627	Inverter P.C. board for fan		MCC-1659	ASM-PCB(FANIPDU)
43T6V624	Noise filter P.C. board (Left side)		MCC-1608-A,B	ASM-PCB(N/F)
43T6V625	Noise filter P.C. board (Right side)		MCC-1608-A,B	ASM-PCB(N/F)
43T6V646	Demand Response P.C. board (For MMY-MAP****HT8P-A)		MCC-1653	ASM-PCB(DRC)

13-1-2 Configuration of inverter assembly

MMY-MAP0806*
MMY-MAP1006*
MMY-MAP1206*
MMY-MAP14B6*

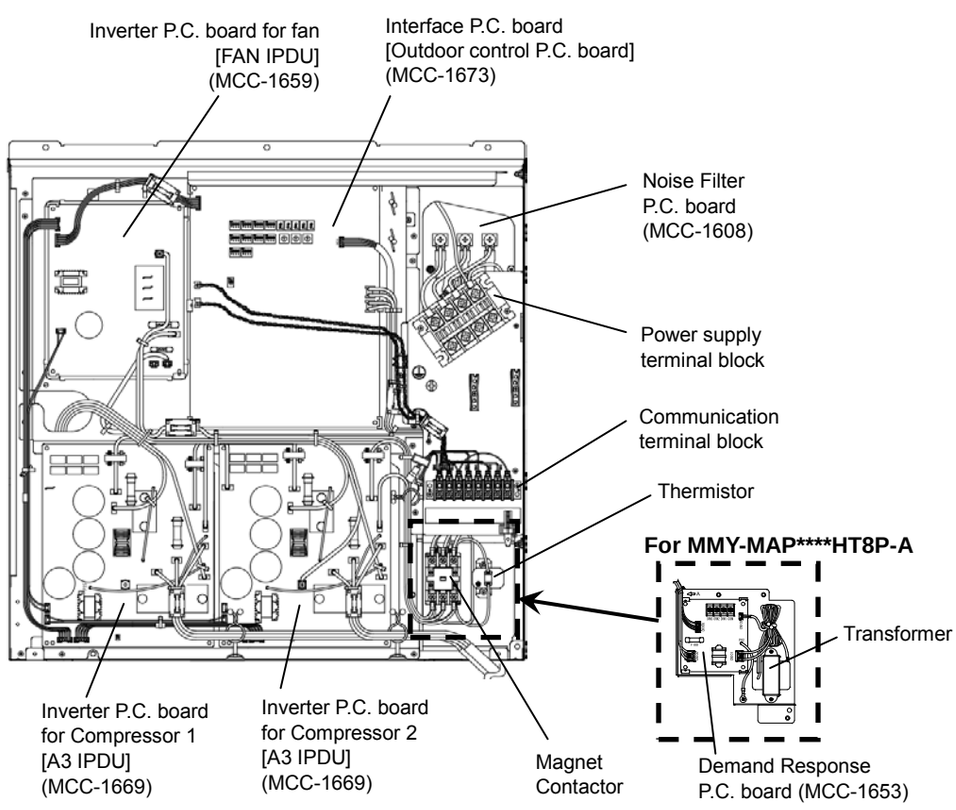

MMY-MAP1406*
MMY-MAP1606*
MMY-MAP18B6*

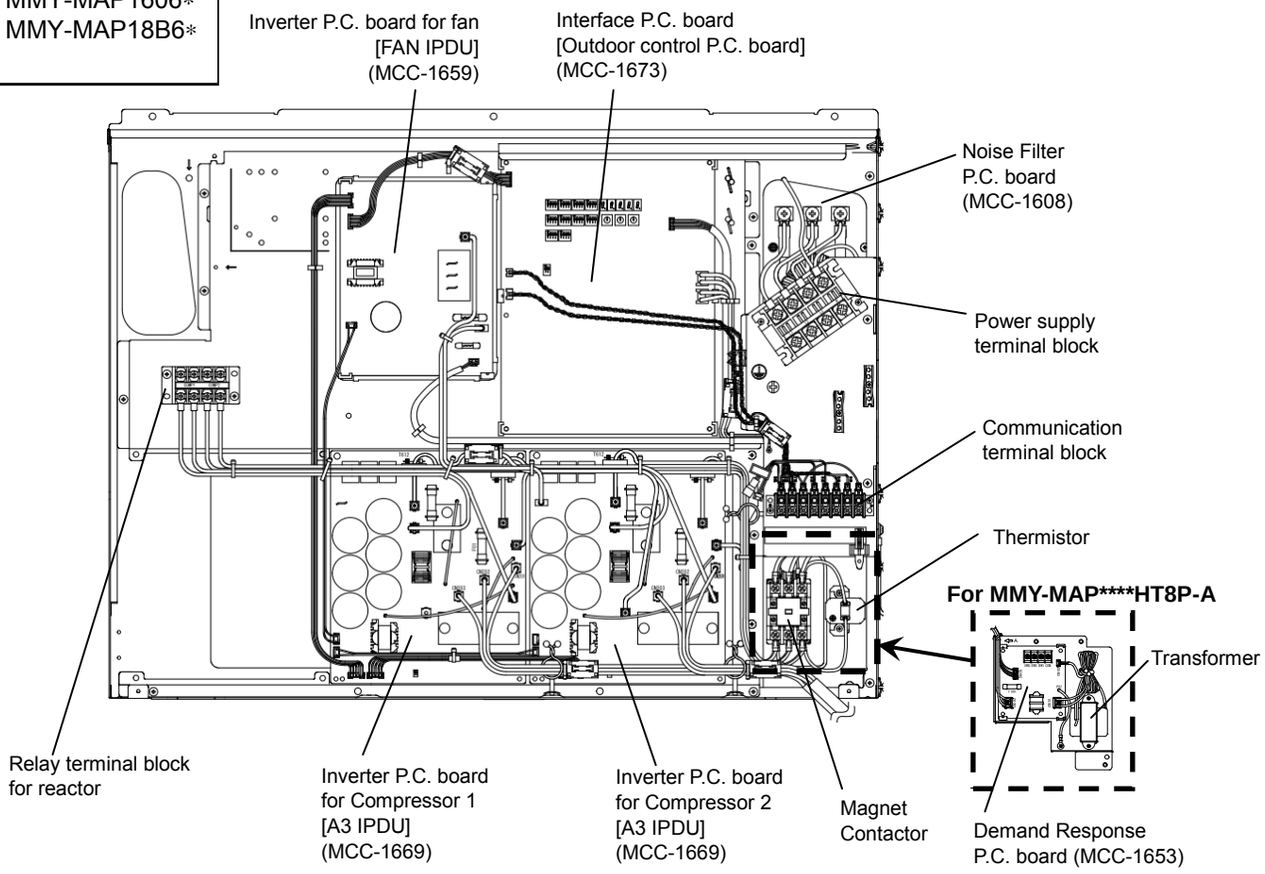

MMY-MAP1806*
MMY-MAP2006*
MMY-MAP2206*

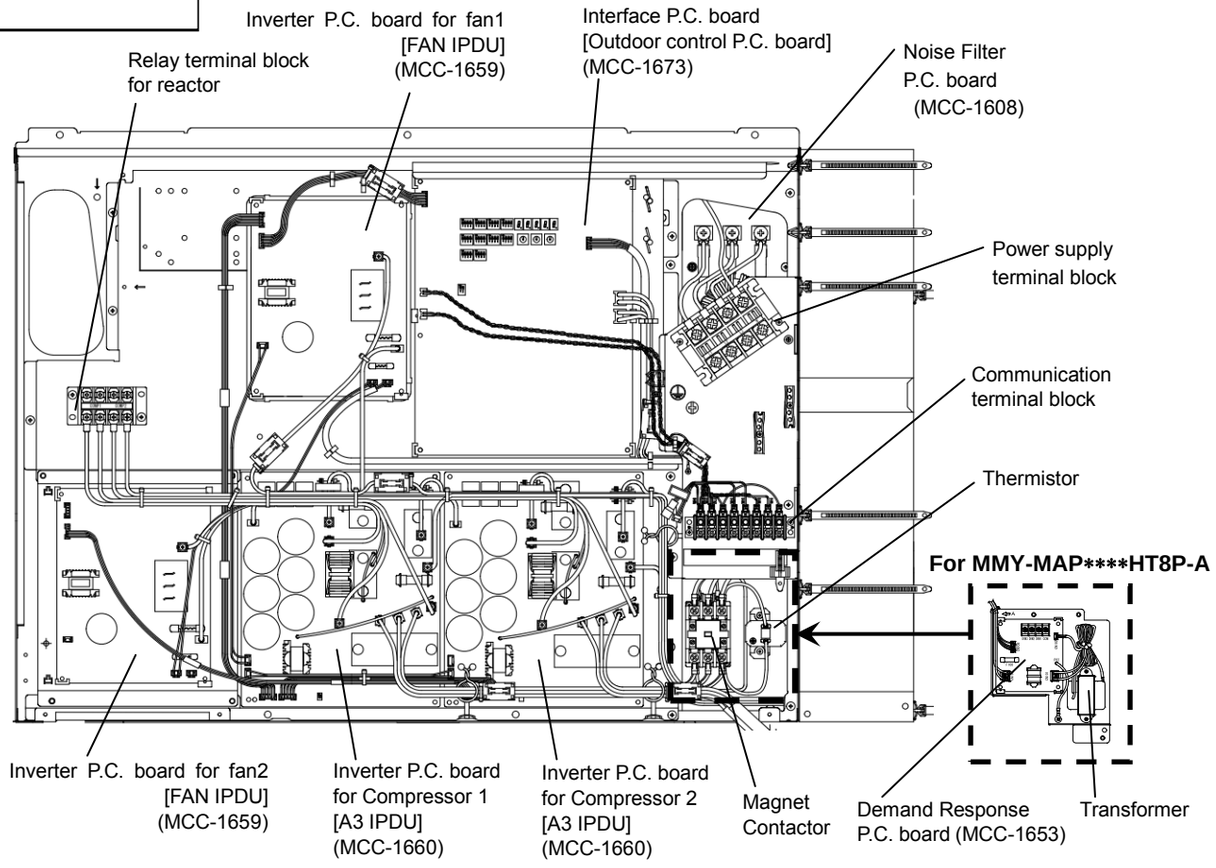

13-1-3. Interface P.C. Board (MCC-1673) Replacement Procedure

This Interface board is commonly installed in different models before shipment. When the board assembly is to be replaced, check the displayed inspection contents below and replace the board in accordance with the model, following the below procedure.

Replacement steps:

(1) Turn off the power supply of the outdoor unit and wait at least 3 minutes.

(2) Remove all of the connectors connected to the interface board. (Remove the connectors by pulling the connector body. Do not pull the wire).

(3) Remove the interface board from the six PCB mounts (①).

(4) Cut the jumper wires of the service board, as instructed in the table 1 (H/P model) or table 2 (C/O model). The jumper setting differs from original supplied PCB, therefore be sure to configure the Jumpers as in the table below.
If the model is not specified, inspection code "L10" is displayed and the equipment will not operate.

Table 1. H/P model

Gr	Model name	Model size	J02	J06	J07	J09	J10	J11	J12	J22	J24
	Service P.C. Board		Yes	Yes	Yes	Yes	Yes	Yes	Yes	Yes	Yes
A	MMY-MAP0806HT8(J)P-E	990W	—	Cut	Cut	Cut	Cut	—	—	Cut	—
	MMY-MAP1006HT8(J)P-E		—	Cut	Cut	—	Cut	—	—	Cut	—
	MMY-MAP1206HT8(J)P-E		—	Cut	Cut	Cut	—	—	—	Cut	—
	MMY-MAP1406HT8(J)P-E	1210W	—	Cut	Cut	Cut	Cut	Cut	Cut	Cut	—
	MMY-MAP1606HT8(J)P-E		—	Cut	Cut	—	Cut	Cut	Cut	Cut	—
	MMY-MAP1806HT8(J)P-E	1600W	—	Cut	Cut	Cut	—	Cut	Cut	Cut	—
	MMY-MAP2006HT8(J)P-E		—	Cut	Cut	—	—	Cut	Cut	Cut	—
	MMY-MAP2206HT8(J)P-E		—	Cut	Cut	Cut	Cut	—	Cut	Cut	—
B	MMY-MAP0806HT8(J)P-TR	990W	—	Cut	Cut	Cut	Cut	—	—	Cut	Cut
	MMY-MAP1006HT8(J)P-TR		—	Cut	Cut	—	Cut	—	—	Cut	Cut
	MMY-MAP1206HT8(J)P-TR		—	Cut	Cut	Cut	—	—	—	Cut	Cut
	MMY-MAP1406HT8(J)P-TR	1210W	—	Cut	Cut	Cut	Cut	Cut	Cut	Cut	Cut
	MMY-MAP1606HT8(J)P-TR		—	Cut	Cut	—	Cut	Cut	Cut	Cut	Cut
	MMY-MAP1806HT8(J)P-TR	1600W	—	Cut	Cut	Cut	—	Cut	Cut	Cut	Cut
	MMY-MAP2006HT8(J)P-TR		—	Cut	Cut	—	—	Cut	Cut	Cut	Cut
	MMY-MAP2206HT8(J)P-TR		—	Cut	Cut	Cut	Cut	—	Cut	Cut	Cut
C	MMY-MAP0806HT8/7(J)P-ME	990W	—	—	—	Cut	Cut	—	—	Cut	—
	MMY-MAP1006HT8/7(J)P-ME		—	—	—	—	Cut	—	—	Cut	—
	MMY-MAP10A6HT8/7(J)P-ME	1210W	—	—	Cut	—	Cut	—	—	Cut	—
	MMY-MAP1206HT8/7(J)P-ME	990W	—	—	—	Cut	—	—	—	Cut	—
	MMY-MAP12A6HT8/7(J)P-ME	1210W	—	—	Cut	Cut	—	—	—	Cut	—
	MMY-MAP1406HT8/7(J)P-ME		—	—	—	Cut	Cut	Cut	Cut	Cut	—
	MMY-MAP14A6HT8/7(J)P-ME	1600W	—	—	Cut	Cut	Cut	Cut	Cut	Cut	—
	MMY-MAP1606HT8/7(J)P-ME	1210W	—	—	—	—	Cut	Cut	Cut	Cut	—
	MMY-MAP16A6HT8/7(J)P-ME	1600W	—	—	Cut	—	Cut	Cut	Cut	Cut	—
	MMY-MAP1806HT8/7(J)P-ME		—	—	—	Cut	—	Cut	Cut	Cut	—
	MMY-MAP2006HT8/7(J)P-ME		—	—	—	—	—	Cut	Cut	Cut	—
D	MMY-MAP0806HT8/7(J)P*	990W	—	—	—	Cut	Cut	—	—	Cut	—
	MMY-MAP1006HT8/7(J)P*		—	—	—	—	Cut	—	—	Cut	—
	MMY-MAP1206HT8/7(J)P*		—	—	—	Cut	—	—	—	Cut	—
	MMY-MAP1406HT8/7(J)P*	1210W	—	—	—	Cut	Cut	Cut	Cut	Cut	—
	MMY-MAP1606HT8/7(J)P*		—	—	—	—	Cut	Cut	Cut	Cut	—
	MMY-MAP1806HT8/7(J)P*	1600W	—	—	—	Cut	—	Cut	Cut	Cut	—
	MMY-MAP2006HT8/7(J)P*		—	—	—	—	—	Cut	Cut	Cut	—
	MMY-MAP2206HT8/7(J)P*		—	—	—	Cut	Cut	—	Cut	Cut	—

* The characters in accordance with the destination may attach to the end of model name except for Gr A, B, C. (Blank, -A, -C etc.)

Table 2. C/O model

Gr	Model name	Model size	J02	J06	J07	J09	J10	J11	J12	J22	J24
	Service P.C. Board		Yes	Yes	Yes	Yes	Yes	Yes	Yes	Yes	Yes
E	MMY-MAP0806T8(J)P-E	990W	Cut	—	—	Cut	Cut	—	—	Cut	—
	MMY-MAP1006T8(J)P-E		Cut	—	—	—	Cut	—	—	Cut	—
	MMY-MAP1206T8(J)P-E		Cut	—	—	Cut	—	—	—	Cut	—
	MMY-MAP1406T8(J)P-E	1210W	Cut	—	—	Cut	Cut	Cut	Cut	Cut	—
	MMY-MAP1606T8(J)P-E		Cut	—	—	—	Cut	Cut	Cut	Cut	—
	MMY-MAP1806T8(J)P-E	1600W	Cut	—	—	Cut	—	Cut	Cut	Cut	—
	MMY-MAP2006T8(J)P-E		Cut	—	—	—	—	Cut	Cut	Cut	—
	MMY-MAP2206T8(J)P-E		Cut	—	—	Cut	Cut	—	Cut	Cut	—
F	MMY-MAP0806T8/7(J)P#	990W	Cut	—	—	Cut	Cut	—	—	Cut	—
	MMY-MAP1006T8/7(J)P#		Cut	—	—	—	Cut	—	—	Cut	—
	MMY-MAP1206T8/7(J)P#		Cut	—	—	Cut	—	—	—	Cut	—
	MMY-MAP14B6T8/7(J)P#		Cut	Cut	—	Cut	Cut	Cut	Cut	Cut	—
	MMY-MAP1406T8/7(J)P#	1210W	Cut	—	—	Cut	Cut	Cut	Cut	Cut	—
	MMY-MAP1606T8/7(J)P#		Cut	—	—	—	Cut	Cut	Cut	Cut	—
	MMY-MAP18B6T8/7(J)P#		Cut	Cut	—	Cut	—	Cut	Cut	Cut	—
	MMY-MAP1806T8/7(J)P#	1600W	Cut	—	—	Cut	—	Cut	Cut	Cut	—
	MMY-MAP2006T8/7(J)P#		Cut	—	—	—	—	Cut	Cut	Cut	—
	MMY-MAP2206T8/7(J)P#		Cut	—	—	Cut	Cut	—	Cut	Cut	—

＃The characters in accordance with the destination may attach to the end of model name except for Gr E. (Blank, -ID, -SG, -T etc.)

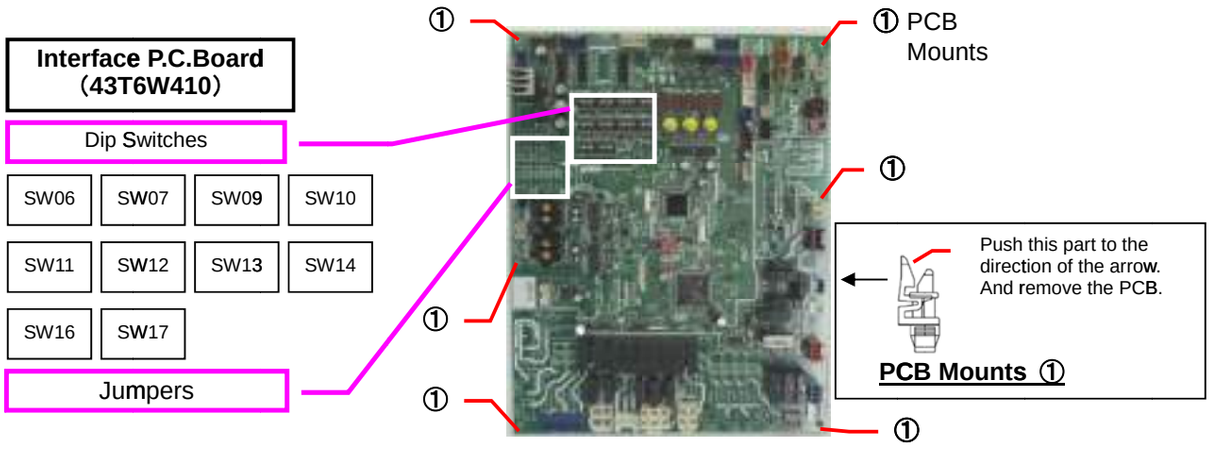

(5) Set the dip switch settings of the service board to match the switch settings of the PCB being replaced.

(6) Install the service board to the outdoor control unit (Confirm that it is securely fixed to the PCB Mounts).

(7) Connect the connectors (Confirm that they are correctly and securely inserted).

(8) If a component on the board is bent during board replacement, adjust it manually ensuring that it is not short or contact other parts.

(9) Install the cover, then turn on the power supply. Check the operation.

13-1-4. Comp-IPDU P.C. Board (MCC-1669) Replacement Procedure <MAP0806∗, 1006∗, 1206∗, 14B6∗ type>

This board is commonly installed in different models before shipment. Set the DIP switch (SW800) setting of the service board to the switch setting before replacement.

Replacement Steps:

(1) Turn off the power supply of the outdoor unit and allow at least 3 minutes for the capacitor to discharge.

(2)Remove all the connectors and the Faston and screw terminals(①) connected to the Compressor IPDU.
(Remove the connectors by pulling the connector body. Do not pull the wire).

(3)Remove all the four screws(②) which secures the Compressor IPDU to the Heat sink.
(These screws are to be re-used after procedure.)

(4)Remove the Compressor IPDU from the four spacers (③) by pinching the top of the spacers by round-nose pliers.

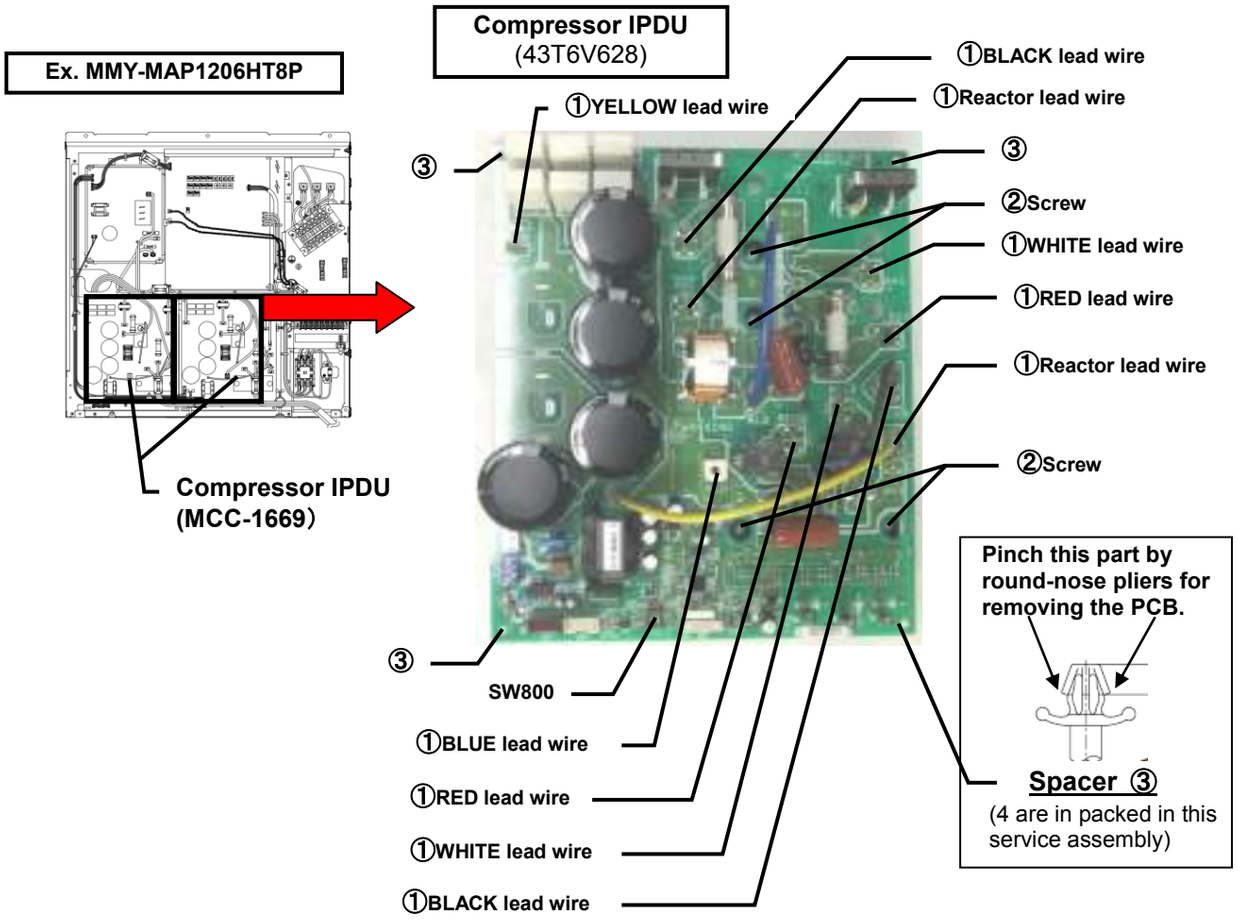

(5) Set the DIP switch (SW800) setting of the service board to match the switch setting from the original PCB.
-Set the DIP switch (SW800) depending on the position of the IPDU within the electrical box, as shown in the following diagram.

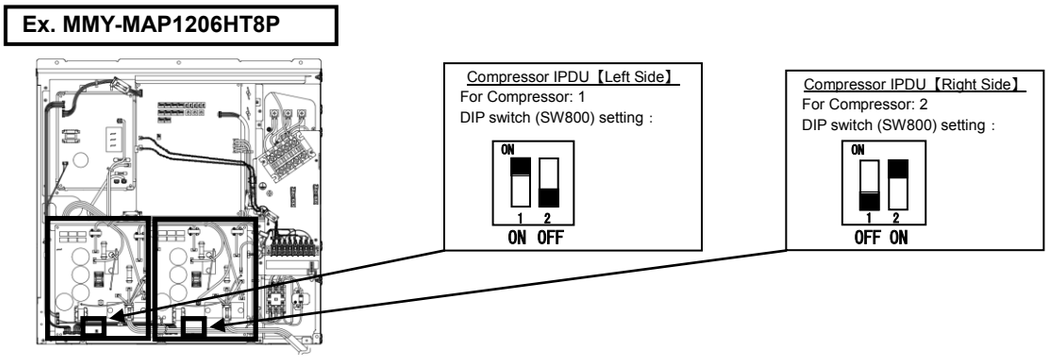

(6) Apply the Silicone Thermal Grease to the semiconductors (DB01, Q201) on the service PC board, and align the positions of the heat sink holes to mount the Compressor IPDU on the outdoor control unit. And fix the Compressor IPDU to the outdoor control unit by the spacers (③).

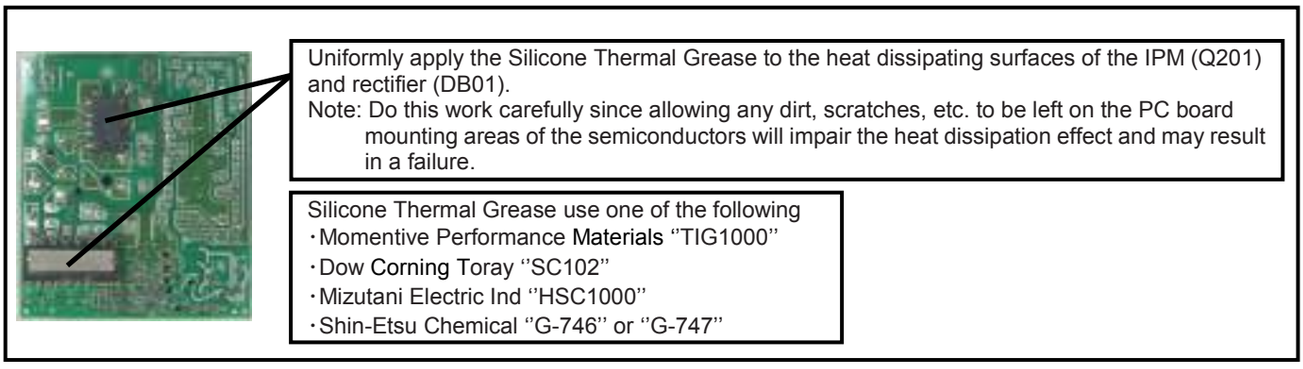

(7) Screw the Compressor IPDU to the heat sink by the four screws that were removed in step (3). If the screws are loose, the effect component will generate heat, and cause it to breakdown. Do not use an electric driver or an air driver. As it can cause component damage. The torque of the screws for DB01 and Q201 is “1.2Nm”.

(8) Re-connect the connectors and Faston and screw terminals(①). Be sure that all the connectors and the screw terminals are connected correctly and securely inserted.

Note: ①When connecting the white lead wire which is connected to CN02, be absolutely sure that it is passed through the T611 transformer and then connected
②When connecting the black lead wire which is connected to CN03, be absolutely sure that it is passed through the T612 transformer and then connected
(If it is not passed through the transformer, it will not be possible for the input current level to be measured correctly, and a compressor failure may result.)

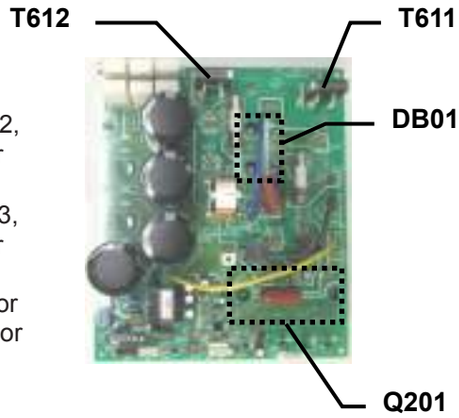

(9) If the components on the PCB were bent during this procedure, straighten them so they do not touch other parts.

(10) Install the cover, then turn on the supply. Check the operation.

13-1-5. Comp-IPDU P.C. Board (MCC-1669) Replacement Procedure <MAP1406∗, 1606∗, 18B6∗ type>

This board is commonly installed in different models before shipment. Set the DIP switch (SW800) setting of the service board to the switch setting before replacement.

Replacement Steps:

(1) Turn off the power supply of the outdoor unit and allow at least 3 minutes for the capacitor to discharge.

(2)Remove all the connectors and the Faston and screw terminals(①) connected to the Compressor IPDU.
(Remove the connectors by pulling the connector body. Do not pull the wire).

(3)Remove all the four screws(②) which secures the Compressor IPDU to the Heat sink.
(These screws are to be re-used after procedure.)

(4)Remove the Compressor IPDU from the four spacers (③) by pinching the top of the spacers by round-nose pliers.

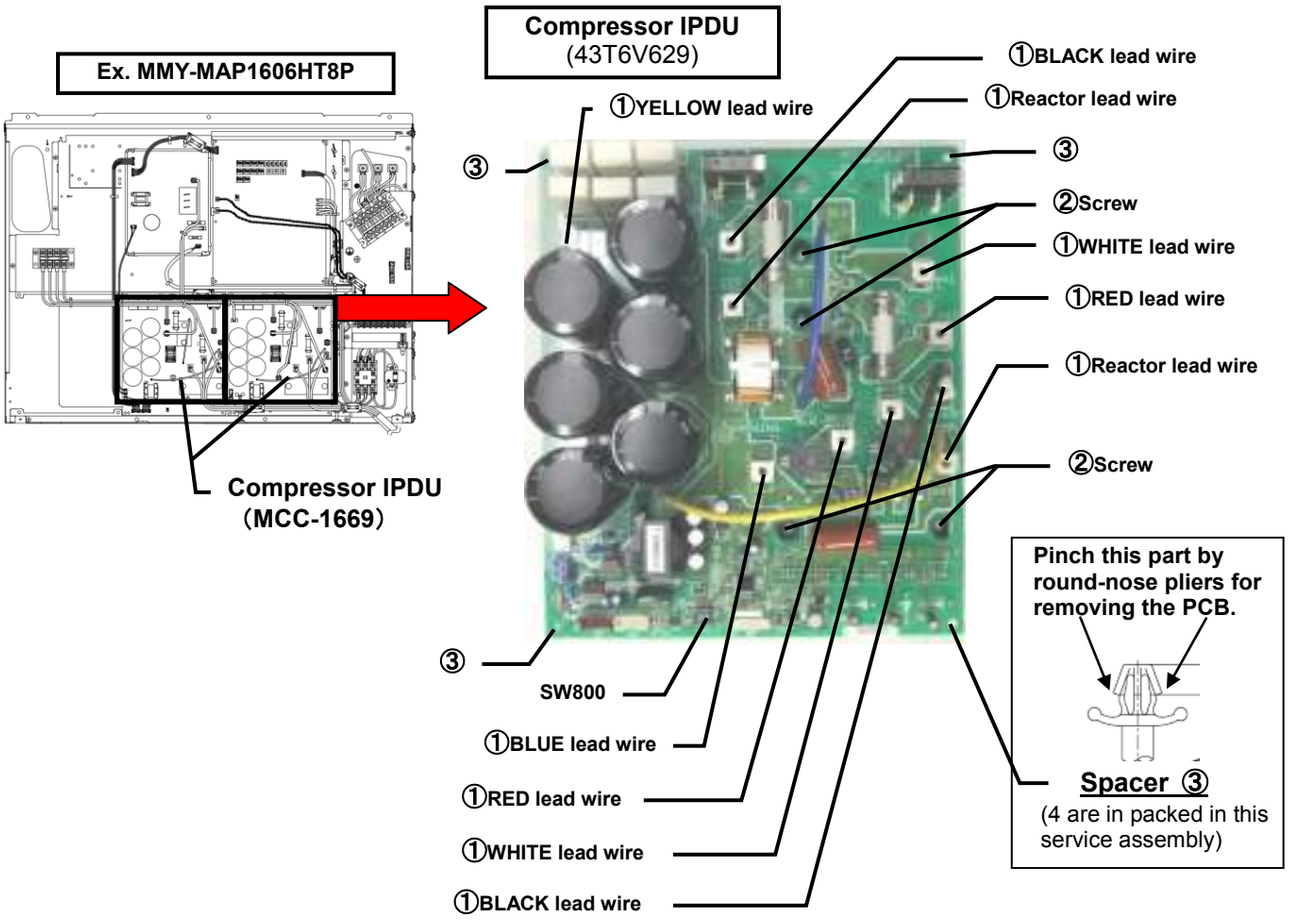

(5) Set the DIP switch (SW800) setting of the service board to match the switch setting from the original PCB.
-Set the DIP switch (SW800) depending on the position of the IPDU within the electrical box, as shown in the following diagram.

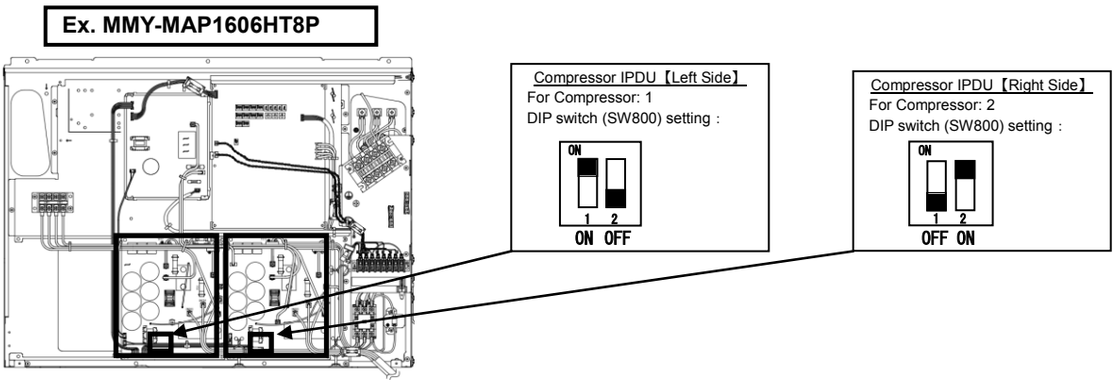

(6) Apply the Silicone Thermal Grease to the semiconductors (DB01, Q201) on the service PC board, and align the positions of the heat sink holes to mount the Compressor IPDU on the outdoor control unit. And fix the Compressor IPDU to the outdoor control unit by the spacers (③).

Uniformly apply the Silicone Thermal Grease to the heat dissipating surfaces of the IPM (Q201) and rectifier (DB01).
Note: Do this work carefully since allowing any dirt, scratches, etc. to be left on the PC board mounting areas of the semiconductors will impair the heat dissipation effect and may result in a failure.

Silicone Thermal Grease use one of the following
・Momentive Performance Materials ‘‘TIG1000’’
・Dow Corning Toray ‘‘SC102’’
・Mizutani Electric Ind ‘‘HSC1000’’
・Shin-Etsu Chemical ‘‘G-746’’ or ‘‘G-747’’

(7) Screw the Compressor IPDU to the heat sink by the four screws that were removed in step (3). If the screws are loose, the effect component will generate heat, and cause it to breakdown. Do not use an electric driver or an air driver. As it can cause component damage. The torque of the screws for DB01 and Q201 is “1.2Nm”.

(8) Re-connect the connectors and Faston and screw terminals(①). Be sure that all the connectors and the screw terminals are connected correctly and securely inserted.

Note: ①When connecting the white lead wire which is connected to CN02, be absolutely sure that it is passed through the T611 transformer and then connected
②When connecting the black lead wire which is connected to CN03, be absolutely sure that it is passed through the T612 transformer and then connected
(If it is not passed through the transformer, it will not be possible for the input current level to be measured correctly, and a compressor failure may result.)

(9) If the components on the PCB were bent during this procedure, straighten them so they do not touch other parts.

(10) Install the cover, then turn on the supply. Check the operation.

13-1-6. Comp-IPDU P.C. Board (MCC-1660) Replacement Procedure <MAP1806∗, 2006∗, 2206∗ type>

This board is commonly installed in different models before shipment. Set the DIP switch (SW800) setting of the service board to the switch setting before replacement.

Replacement Steps:

(1) Turn off the power supply of the outdoor unit and allow at least 3 minutes for the capacitor to discharge.

(2)Remove all the connectors and the Faston and screw terminals(①) connected to the Compressor IPDU.
(Remove the connectors by pulling the connector body. Do not pull the wire).

(3)Remove all the eight screws(②) which secures the Compressor IPDU to the Heat sink.
(These screws are to be re-used after procedure.)

(4)Remove the Compressor IPDU from the four spacers (③) by pinching the top of the spacers by round-nose pliers.

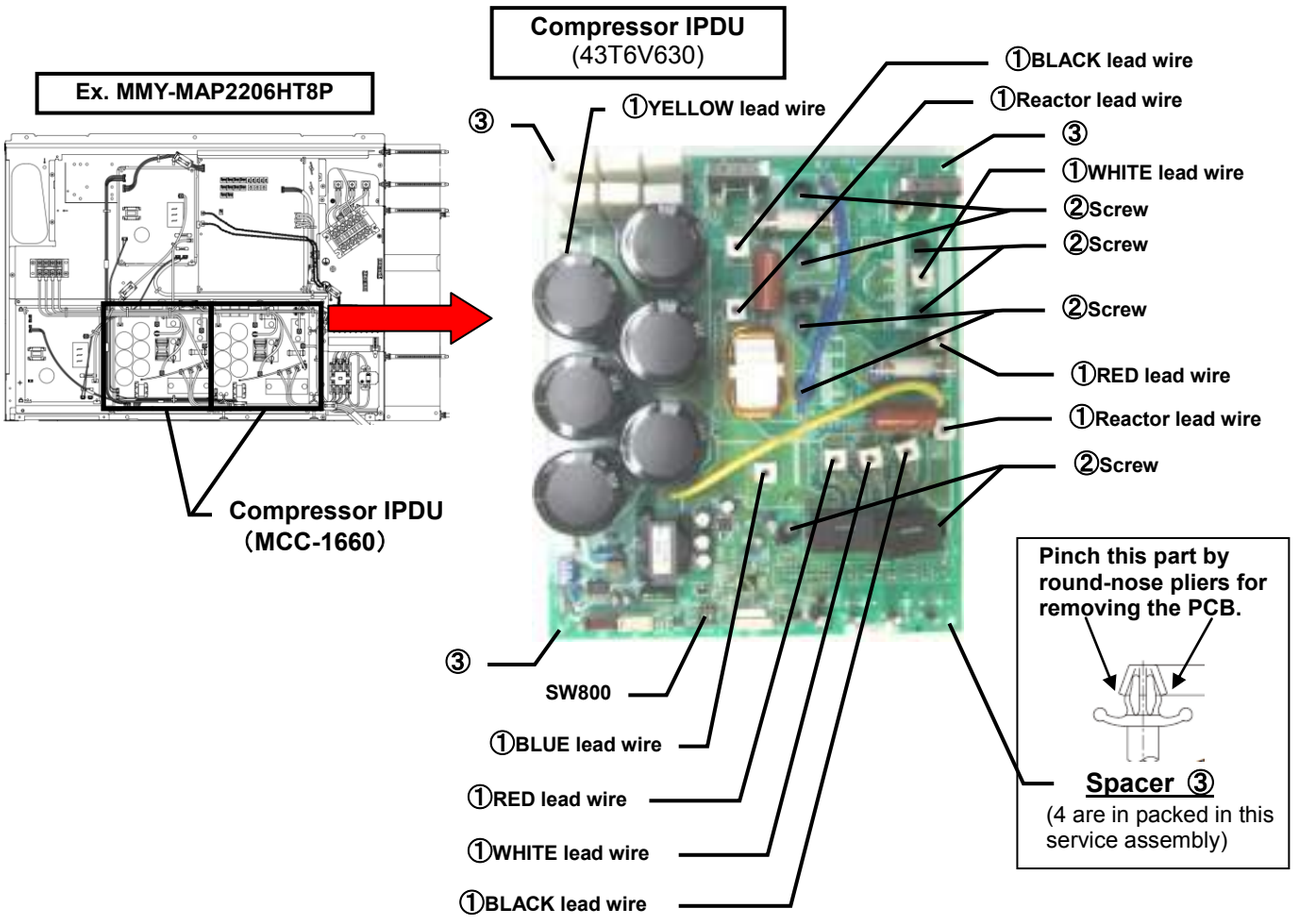

(5) Set the DIP switch (SW800) setting of the service board to match the switch setting from the original PCB.
-Set the DIP switch (SW800) depending on the position of the IPDU within the electrical box, as shown in the following diagram.

Ex. MMY-MAP2206HT8P

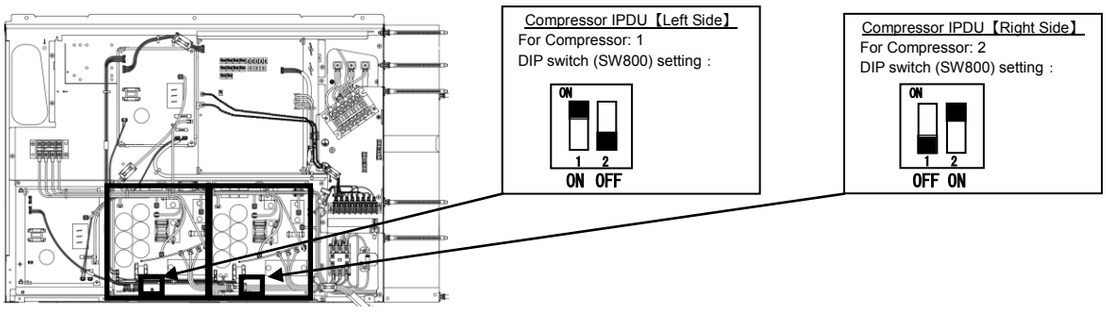

(6) Apply the Silicone Thermal Grease to the semiconductors (DB01, DB02, DB03, Q201) on the service PC board, and align the positions of the heat sink holes to mount the Compressor IPDU on the outdoor control unit. And fix the Compressor IPDU to the outdoor control unit by the spacers (③).

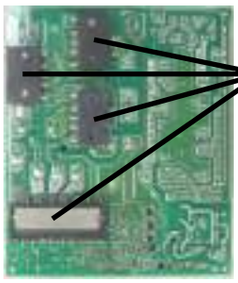

Uniformly apply the Silicone Thermal Grease to the heat dissipating surfaces of the IPM (Q201) and rectifier (DB01, DB02, DB03).
Note: Do this work carefully since allowing any dirt, scratches, etc. to be left on the PC board mounting areas of the semiconductors will impair the heat dissipation effect and may result in a failure.

Silicone Thermal Grease use one of the following
・Momentive Performance Materials ''TIG1000''
・Dow Corning Toray ''SC102''
・Mizutani Electric Ind ''HSC1000''
・Shin-Etsu Chemical ''G-746'' or ''G-747''

(7) Screw the Compressor IPDU to the heat sink by the eight screws that were removed in step (3). If the screws are loose, the effect component will generate heat, and cause it to breakdown. Do not use an electric driver or an air driver. As it can cause component damage. The torque of the screws for DB01, DB02, DB03 and Q201 is "1.2Nm".

(8) Re-connect the connectors and Faston and screw terminals(①). Be sure that all the connectors and the screw terminals are connected correctly and securely inserted.

Note: ①When connecting the lead wire, don't touch PCB part of the T202 transformer.
②When connecting the white lead wire which is connected to CN02, be absolutely sure that it is passed through the T611 transformer and then connected.
③When connecting the black lead wire which is connected to CN03, be absolutely sure that it is passed through the T612 transformer and then connected.
④When connecting the red lead wire which is connected to CN203, be absolutely sure that it is passed through the T201 transformer and then connected.
⑤When connecting the white lead wire which is connected to CN202, be absolutely sure that it is passed through the T202 transformer and then connected.
(If it is not passed through the transformer, it will not be possible for the input current level to be measured correctly, and a compressor failure may result.)

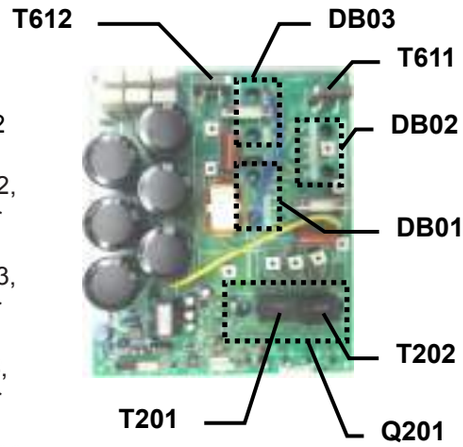

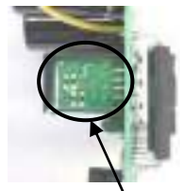

PCB part of the T202 transformer

(9) If the components on the PCB were bent during this procedure, straighten them so they do not touch other parts.

(10) Install the cover, then turn on the supply. Check the operation.

13-1-7. Fan-IPDU P.C. Board (MCC-1659) Replacement Procedure

This board is commonly installed in different models before shipment. Set the DIP switch (SW800) setting of the service board to the switch setting before replacement.

Replacement steps:

(1) Turn off the power supply of the outdoor unit and allow at least 3 minutes for the capacitor to discharge.

(2) Remove all the connectors and the Faston and screw terminals(①) connected to the FAN IPDU.
(Remove the connectors and Faston terminals by pulling the connector body. Do not pull the wire).

(3) Remove all the two screws(②) which secures the FAN IPDU to the Heat sink.
(These screws are to be re-used after procedure.)

(4) Remove the Fan IPDU from the four PCB Mounts (③).

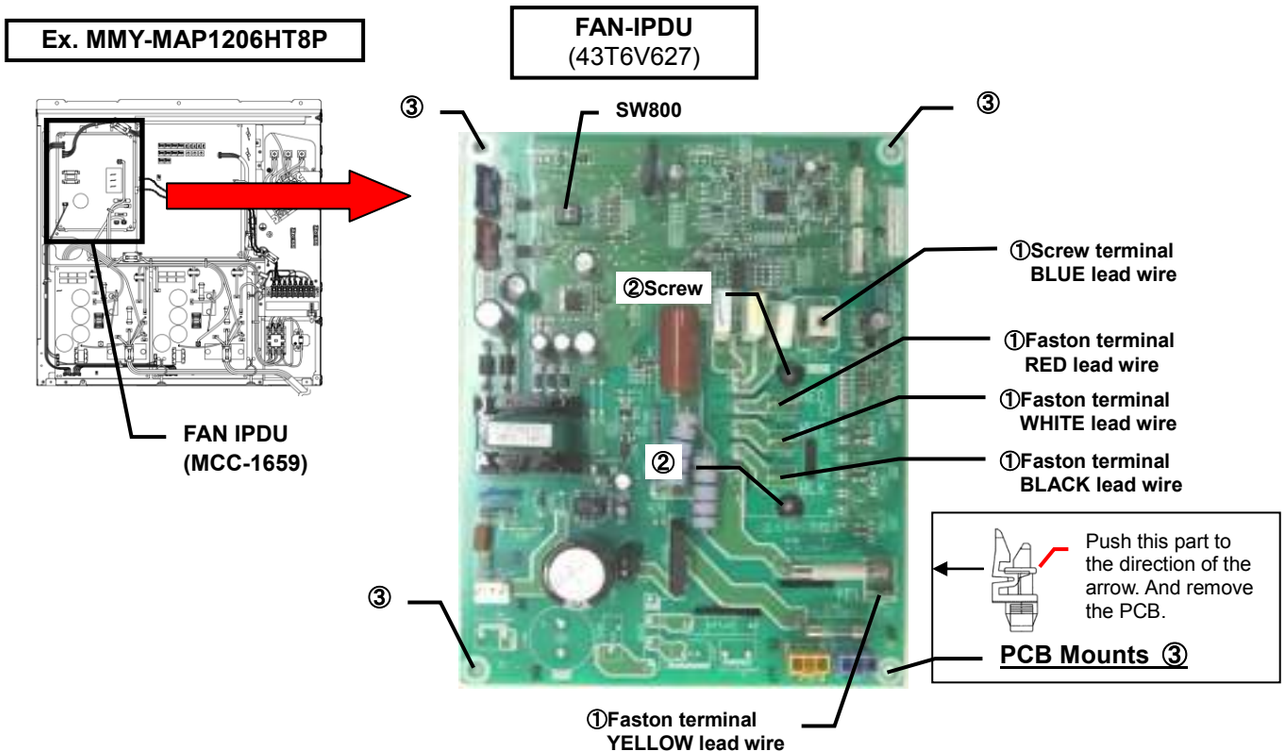

(5) Confirm that no dirt or damage is on the sub heat sink. As it can reduce the heat transfer efficiency, and cause a breakdown.

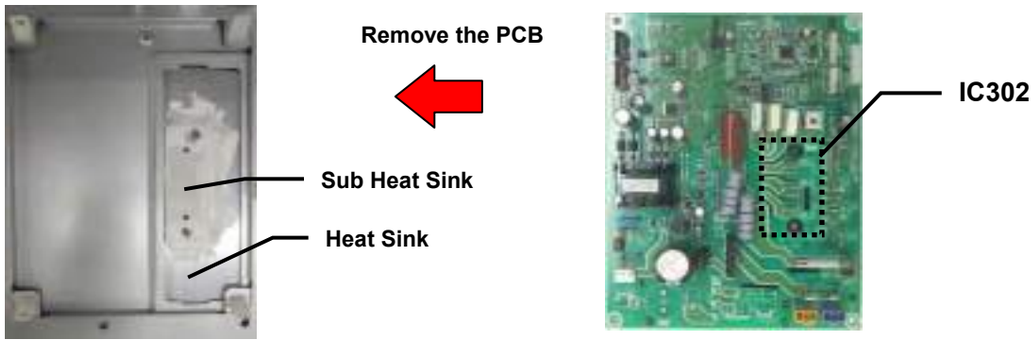

(6) Set the DIP switch (SW800) setting of the service board to match the switch setting from the original PCB.
-Set the DIP switch (SW800) depending on the position of the IPDU within the electrical box, as shown in the following diagram.

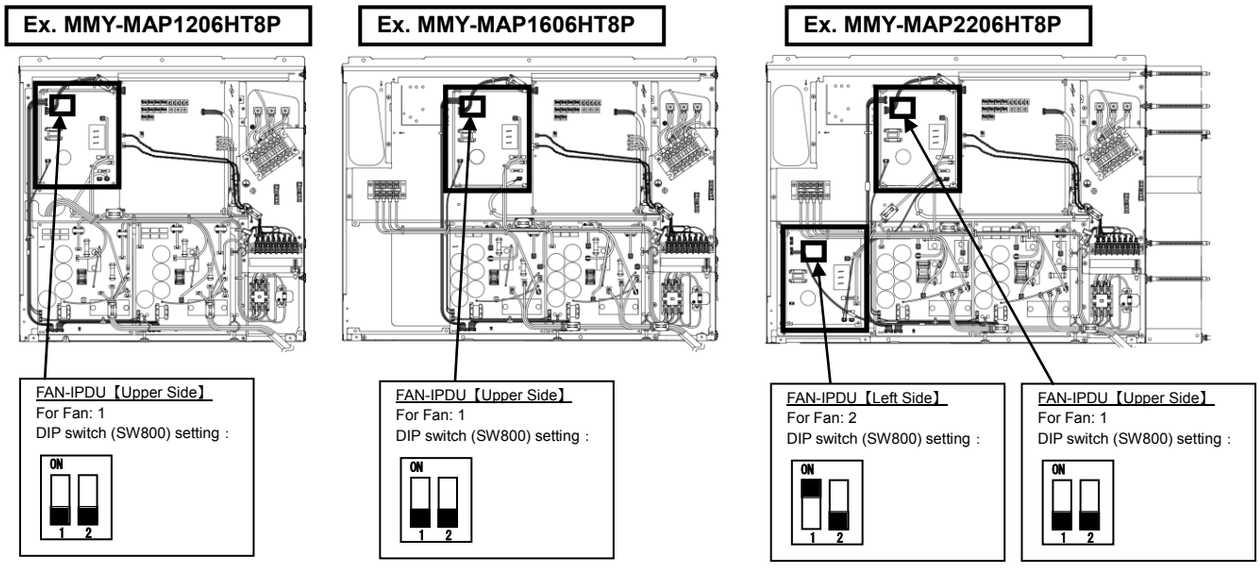

(6) Apply the Silicone Thermal Grease to the semiconductors (IC302) on the service PC board, and align the PCB mount holes on the PCB with the PCB mounts, and fix the FAN IPDU to the outdoor control unit by clipping the PCB into the PCB mounts (③).

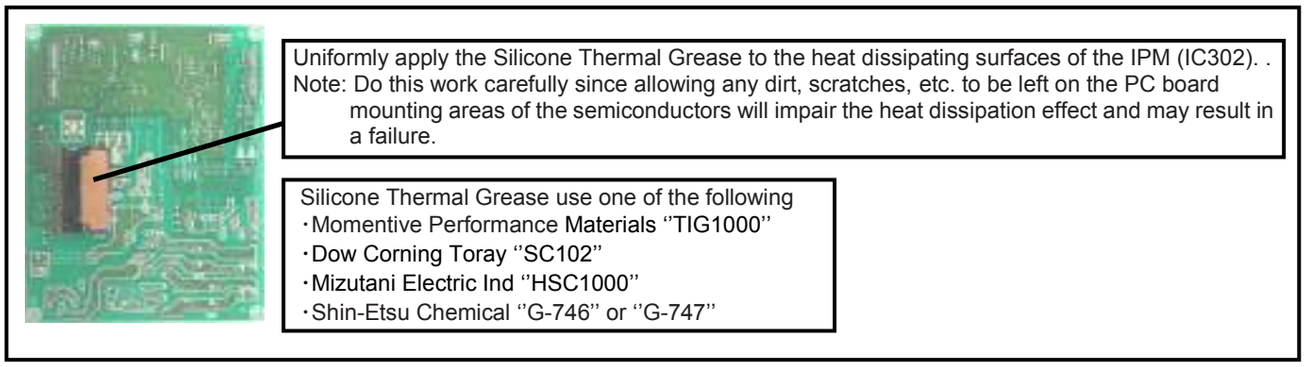

(7) Screw the FAN IPDU to the heat sink by the two screws that were removed in step (3). If the screws are loose, the effected component will generate heat, and cause in to breakdown. Do not use an electric driver or an air driver, as it can cause component damage. The torque of 2 screws (IC302) is “0.55Nm”.

(8) Re-connect the connectors and Faston and screw terminals(①). Be sure that all the connectors and the Faston terminals are connected correctly and securely inserted.

(9) If the components on the PCB were bent during this procedure, straighten them so they do not to touch other parts.

(10) Install the cover, then turn on the supply. Check the operation.

13-1-8. Noise Filter P.C. Board (MCC-1608A, B) Replacement Procedure <MAP0806∗, 1006∗, 1206∗, 14B6∗, 1406∗, 1606∗, 18B6∗ type>

Replacement steps:

(1) Turn off the power supply of the outdoor unit and allow at least 3 minutes for the capacitor to discharge.

(2) Remove the terminal block sub-assembly ①.
Remove the screws ② on the power supply terminal block ④ and the screws ③ securing the terminal block subassembly ①.

- he screws will be reused during the installation of the service P.C. board, so keep them in a safe place.

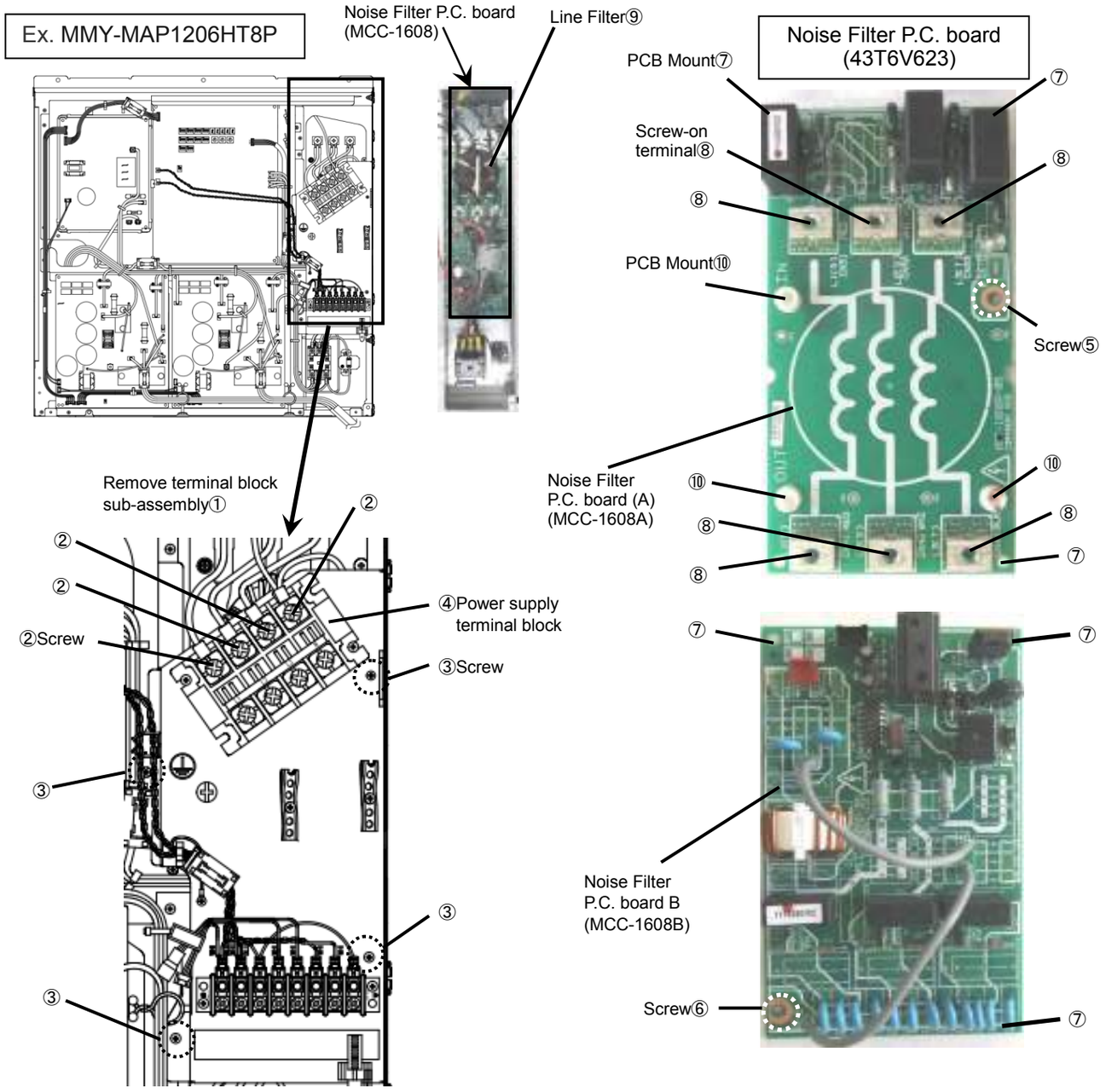

(3) Disconnect all the connectors and Faston terminals used to connect wiring to the noise filter P.C. board.

- he line filter ⑨ and its leads, both connected to the screw-on terminals ⑧ of the noise filter P.C. board (A) will be removed in step 6.
- D sconnect all the connectors and Faston terminals.

(4) Remove the earth screws ⑤, ⑥ and the three PCB mount ⑩.
- The removed earth screws ⑤, ⑥ and the PCB mount ⑩ will be reused during the installation of the service P.C. board, so keep them in a safe place.

(5) Remove the noise filter P.C. board assembly by unlocking the four PCB mounts used to secure the P.C. board ⑦.

(6) Remove the line filter ⑨ and its leads, both connected to the screw-on terminals ⑧ of the just-removed noise filter P.C. board (A), and reinstall them on the service P.C. board (A) by firmly connecting them to the screw-on terminals ⑧ in the same manner as before.

(7) Install the service P.C. boards (A) and (B) in the outdoor unit controller.
(Make sure that they are firmly secured to the PCB mounts ⑦ and ⑩.)

Line Filter installation:

Screw the line filter and the connecting wires together to the terminals as right figure.
The torque of 6 screws of the line filter is "1.84ft·lbs (2.5Nm)".

Please check that the screws connecting the line filter are not loose. If the screw is loose, the screw will generate heats, and cause the line filter to breakdown.

Do not use an electric driver or an air driver, as this can cause damage to the line filter.

Connect the wires according to the wiring diagram.

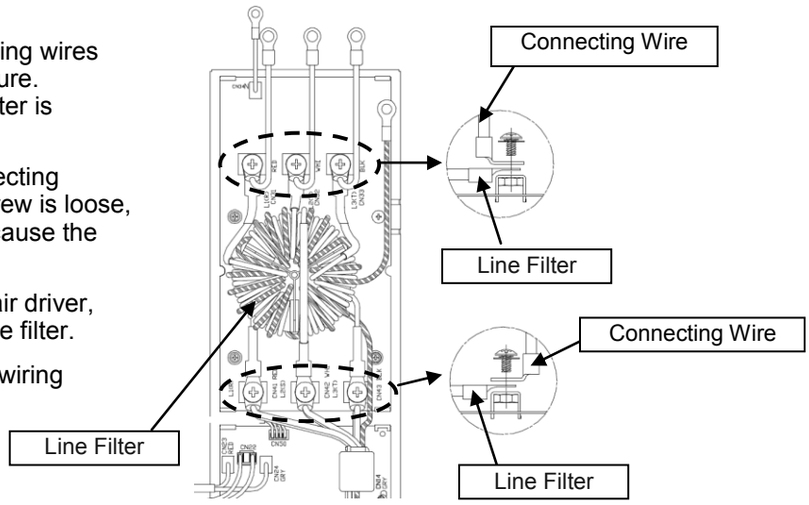

(8) Securely connect the service P.C. boards to the chassis using the earth screws ⑤, ⑥ removed in step (4).
If either of the screws is loose, it will pose a risk of device failure by degrading noise control, so take care while engaging in the work. Nevertheless, do not use an electric or pneumatic screwdriver under any circumstances as it may lead to component damage.

(9) Connect the wiring using the connectors and Fastons removed in step (3).
Make sure that the connectors and Fastons are connected correctly and securely.

(10) If any component on the P.C. board becomes crooked during replacement, straighten it without touching any other component.

(11) Mount the terminal block sub-assembly ① and firmly secure it using the screws ③.

(12) Securely connect the red, white and black leads from the service P.C. board (A) to the power supply terminal block ④ using the screws ②.

(13) Put the cover on, turn on the power, and check operation.

Close-up view of screw-on terminals ⑧

Screw tightening torque (N•m)

Screw diameter	Torque (N•m)
M6	2.5±0.1
M4	1.2±0.1
M3	0.5±0.1

Close-up view of terminal block sub-assembly

13-1-9. Noise Filter P.C. Board (MCC-1608A, B) Replacement Procedure <MAP1806∗, 2006∗, 2206∗ type (Left side of Noise Filter Box)>

Replacement steps:

(1) Turn off the power supply of the outdoor unit and allow at least 3 minutes for the capacitor to discharge.

(2) Remove the terminal block sub-assembly ①.
Remove the screws ② on the power supply terminal block ④ and the screws ③ securing the terminal block subassembly ①.
- he screws will be reused during the installation of the service P.C. board, so keep them in a safe place.

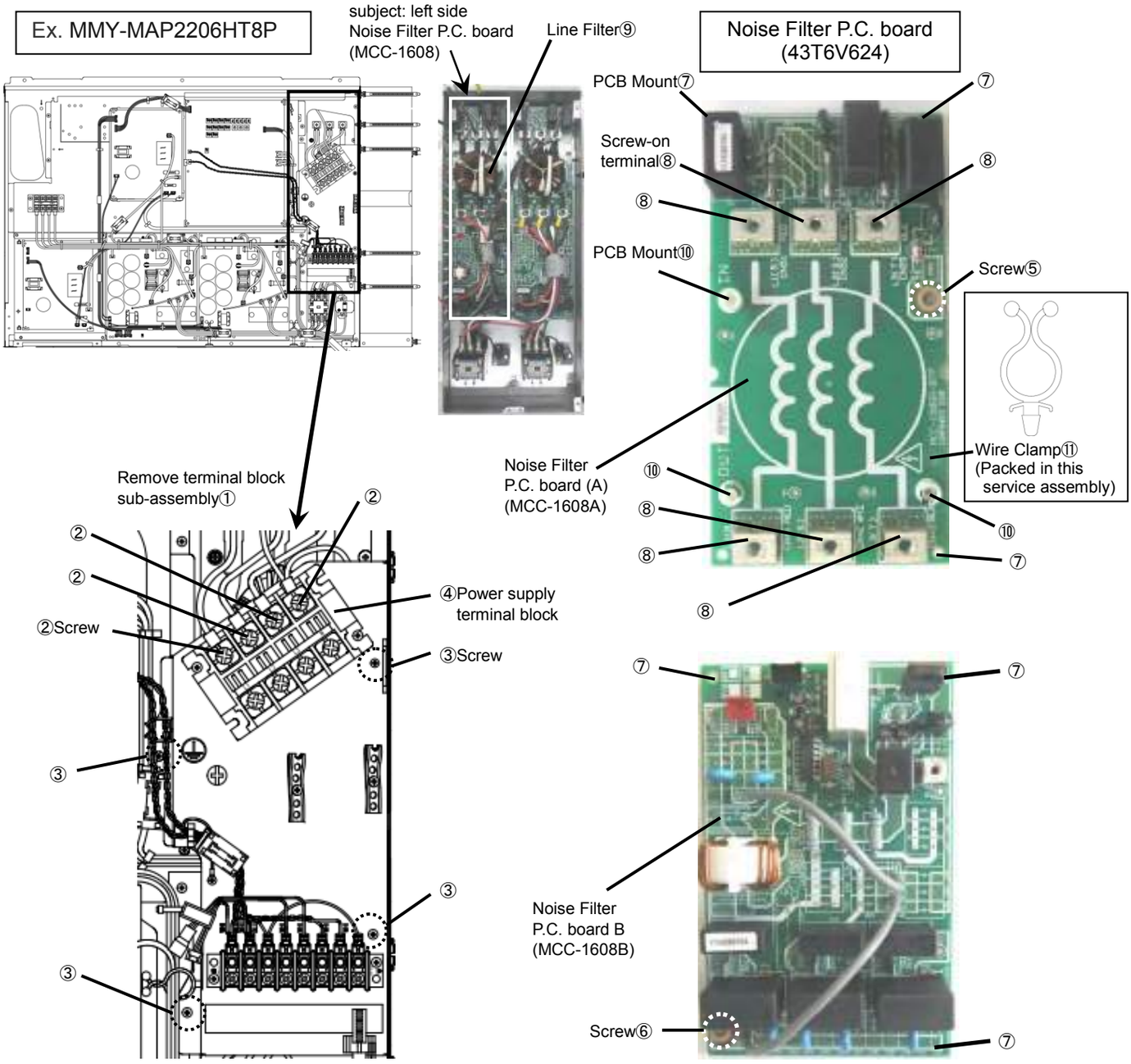

(3) Disconnect all the connectors and Faston terminals used to connect wiring to the noise filter P.C. board.
- he line filter ⑨ and its leads, both connected to the screw-on terminals ⑧ of the noise filter P.C. board (A) will be removed in step 6.
- D sconnect all the connectors and Faston terminals.

(4) Remove the earth screws ⑤, ⑥ and the three PCB mount ⑩.
- The removed earth screws ⑤, ⑥ and the PCB mount ⑩ will be reused during the installation of the service P.C. board, so keep them in a safe place.

(5) Remove the noise filter P.C. board assembly by unlocking the four PCB mounts used to secure the P.C. board ⑦.

(6) Remove the line filter ⑨ and its leads, both connected to the screw-on terminals ⑧ of the just-removed noise filter P.C. board (A), and reinstall them on the service P.C. board (A) by firmly connecting them to the screw-on terminals ⑧ in the same manner as before.

(7) Install the service P.C. boards (A) and (B) in the outdoor unit controller. Insert wire clamp ⑪ into the hole of P.C. board (A) (Make sure that they are firmly secured to the PCB mounts ⑦ and ⑩.)

Line Filter installation:

Screw the line filter and the connecting wires together to the terminals as right figure. The torque of 6 screws of the line filter is "1.84ft･lbs (2.5Nm)".

Please check that the screws connecting the line filter are not loose. If the screw is loose, the screw will generate heats, and cause the line filter to breakdown.

Do not use an electric driver or an air driver, as this can cause damage to the line filter.

Connect the wires according to the wiring diagram.

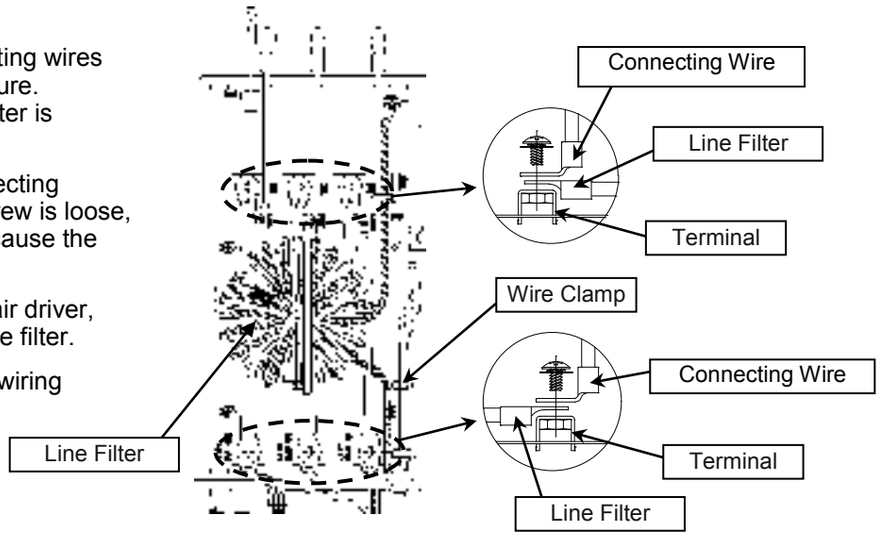

(8) Securely connect the service P.C. boards to the chassis using the earth screws ⑤, ⑥ removed in step (4). If either of the screws is loose, it will pose a risk of device failure by degrading noise control, so take care while engaging in the work. Nevertheless, do not use an electric or pneumatic screwdriver under any circumstances as it may lead to component damage.

(9) Connect the wiring using the connectors and Fastons removed in step (3). Make sure that the connectors and Fastons are connected correctly and securely.

(10) If any component on the P.C. board becomes crooked during replacement, straighten it without touching any other component.

(11) Mount the terminal block sub-assembly ① and firmly secure it using the screws ③.

(12) Securely connect the red, white and black leads from the service P.C. board (A) to the power supply terminal block ④ using the screws ②.

(13) Put the cover on, turn on the power, and check operation.

Close-up view of screw-on terminals ⑧

Screw tightening torque (N•m)

Screw diameter	Torque (N•m)
M6	2.5±0.1
M4	1.2±0.1
M3	0.5±0.1

close-up view of terminal block sub-assembly

13-1-10. Noise Filter P.C. Board (MCC-1608A, B) Replacement Procedure <MAP1806∗, 2006∗, 2206∗ type (Right side of Noise Filter Box)>

Replacement steps:

(1) Turn off the power supply of the outdoor unit and allow at least 3 minutes for the capacitor to discharge.

(2) Remove the filter cover ①.
Remove the screws ② on the Inverter assembly securing the filter cover ①.
- he screws will be reused during the installation of the service P.C. board, so keep them in a safe place.

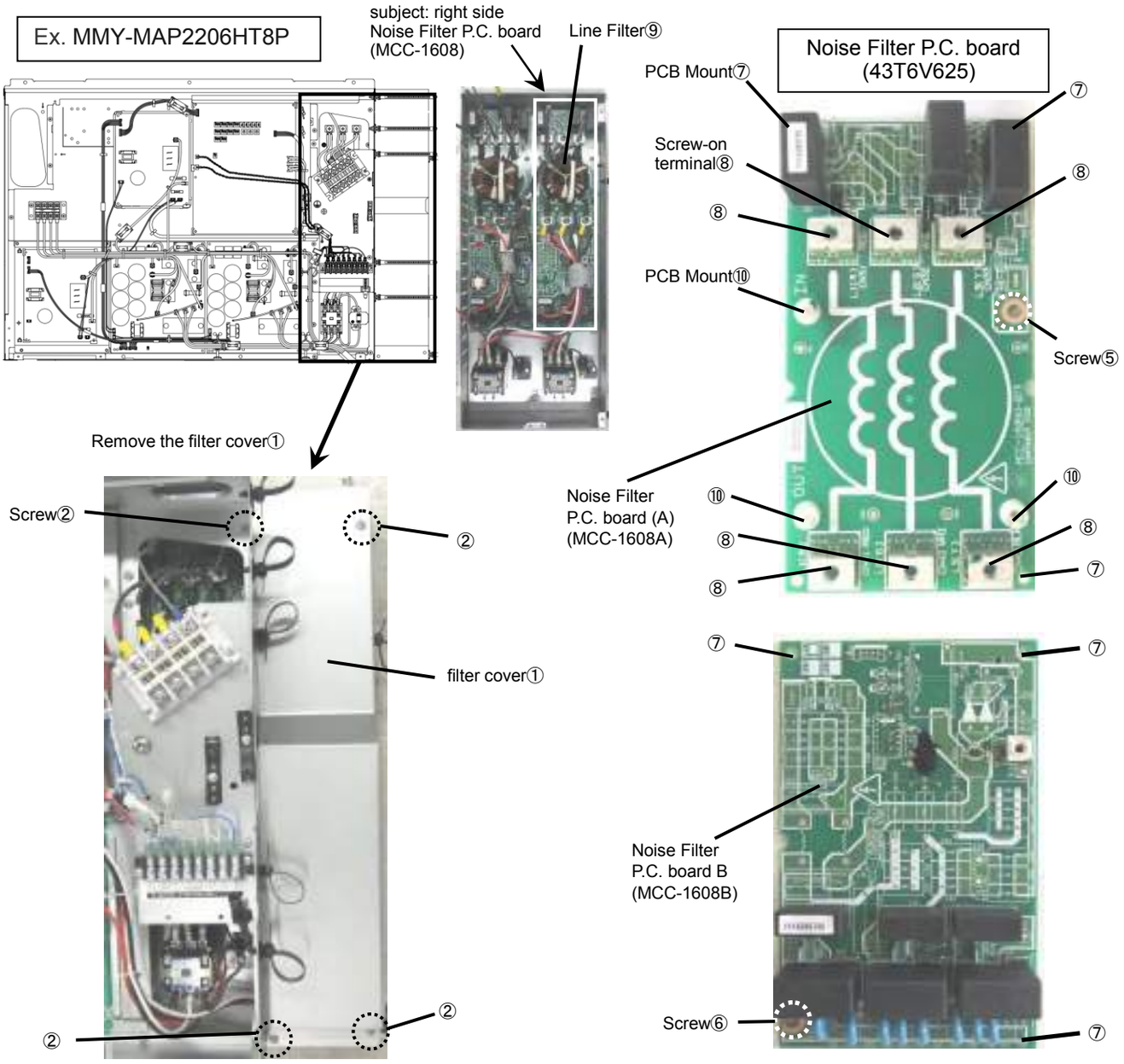

(3) Disconnect all the connectors and Faston terminals used to connect wiring to the noise filter P.C. board.
- he line filter ⑨ and its leads, both connected to the screw-on terminals ⑧ of the noise filter P.C. board (A) will be removed in step 6.
- D sconnect all the connectors and Faston terminals.

(4) Remove the earthing screws ⑤, ⑥ and the three PCB mount ⑩.
- he removed earthing screws ⑤, ⑥ and the PCB mount ⑩ will be reused during the installation of the service P.C. board, so keep them in a safe place.

(5) Remove the noise filter P.C. board assembly by unlocking the four PCB mounts used to secure the P.C. board ⑦.

(6) Remove the line filter ⑨ and its leads, both connected to the screw-on terminals ⑧ of the just-removed noise filter P.C. board (A), and reinstall them on the service P.C. board (A) by firmly connecting them to the screw-on terminals ⑧ in the same manner as before.

(7) Install the service P.C. boards (A) and (B) in the outdoor unit controller.
(Make sure that they are firmly secured to the PCB mounts ⑦ and ⑩.)

Line Filter installation:

Screw the line filter and the connecting wires together to the terminals as right figure.
The torque of 6 screws of the line filter is "1.84ft･lbs (2.5Nm)".

Please check that the screws connecting the line filter are not loose. If the screw is loose, the screw will generate heats, and cause the line filter to breakdown.

Do not use an electric driver or an air driver, as this can cause damage to the line filter.

Connect the wires according to the wiring diagram.

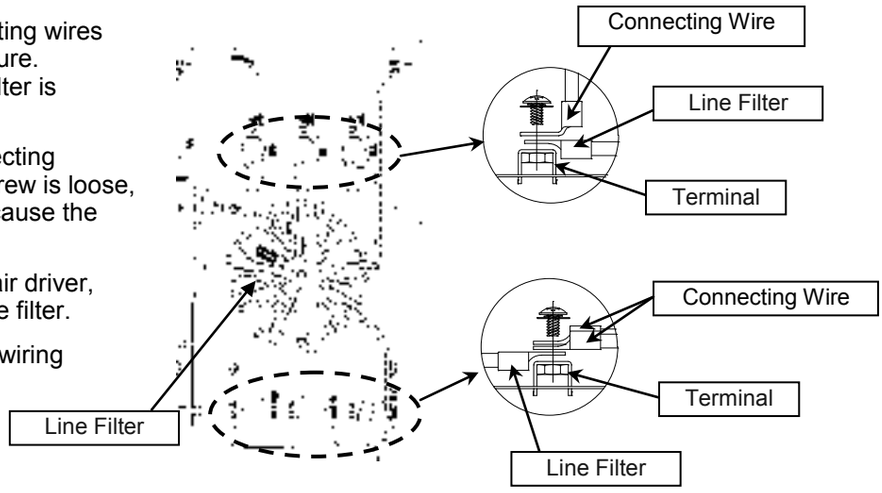

(8) Securely connect the service P.C. boards to the chassis using the earthing screws ⑤, ⑥ removed in step (4). If either of the screws is loose, it will pose a risk of device failure by degrading noise control, so take care while engaging in the work. Nevertheless, do not use an electric or pneumatic screwdriver under any circumstances as it may lead to component damage.

(9) Connect the wiring using the connectors and Fastons removed in step (3).
Make sure that the connectors and Fastons are connected correctly and securely.

(10) If any component on the P.C. board becomes crooked during replacement, straighten it without touching any other component.

(11) Mount the filter cover ① and firmly secure it using the screws ②.

(12) Put the cover on, turn on the power, and check operation.

Close-up view of screw-on terminals ⑧

Screw tightening torque (N•m)

Screw diameter	Torque (N•m)
M6	2.5±0.1
M4	1.2±0.1
M3	0.5±0.1

close-up view of terminal block sub-assembly and filter cover

14 EXPLODED DIAGRAM/PARTS LIST

SMMS-e OUTDOOR UNIT

MMY-MAP0806HT8(J)P, MAP1006HT8(J)P, MAP1206HT8(J)P
MMY-MAP0806HT7(J)P, MAP1006HT7(J)P, MAP1206HT7(J)P
MMY-MAP0806HT8(J)P-ME, MMP1006H8(J)P-ME, MAP1206HT8(J)P-ME
MMY-MAP0806HT7P-ME, MAP1006HT7P-ME, MAP1206HT7P-ME
MMY-MAP0806HT8(J)P-E, MAP1006HT8(J)P-E, MAP1206HT8(J)P-E
MMY-MAP0806T8(J)P-E, MAP1006T8(J)P-E, MAP1206T8(J)P-E
MMY-MAP0806HT8(J)P-TR, MAP1006HT8(J)P-TR, MAP1206HT8(J)P-TR
MMY-MAP0806HT8P-A, MAP1006HT8P-A, MAP1206HT8P-A
MMY-MAP0806T8(J)P, MAP1006T8(J)P, MAP1206T8(K)P, MAP14B6T8(J)P
MMY-MAP0806T7(J)P, MAP1006T7(J)P, MAP1206T7(J)P, MAP14B6T7(J)P
MMY-MAP0806T8P-SG, MAP1006T8P-SG, MAP1206T8P-SG, MAP14B6T8P-SG
MMY-MAP0806T8(J)P-ID, MAP1006T8(J)P-ID, MAP1206T8(J)P-ID, MAP14B6T8(J)P-ID
MMY-MAP0806T8(J)P-T, MAP1006T8(J)P-T, MAP1206T8(J)P-T, MAP14B6T8(J)P-T

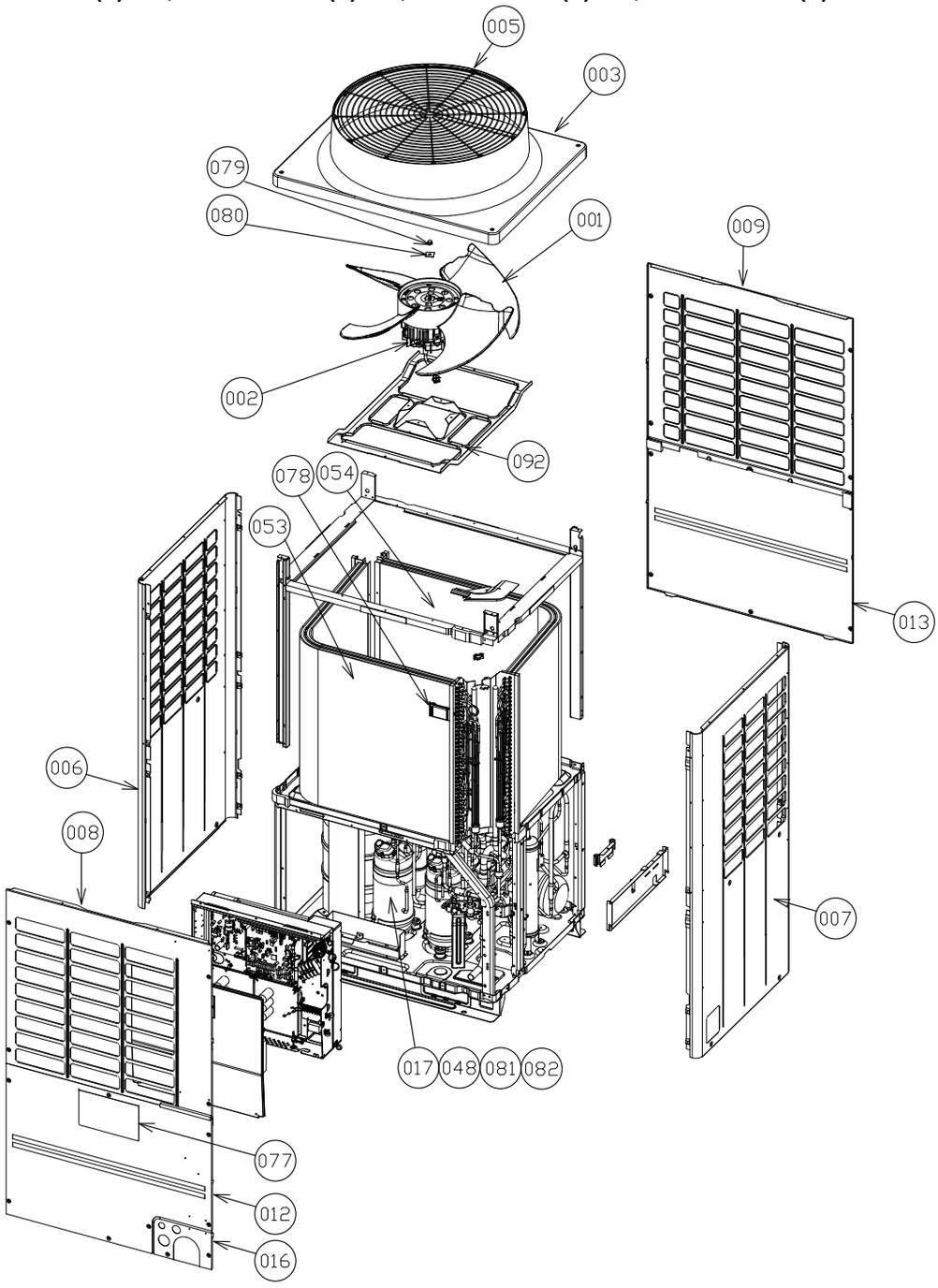

For HT8(J)P, HT7(J)P, HT8(J)P-ME, HT7P-ME, T8(J)P-E, HT8P-A model

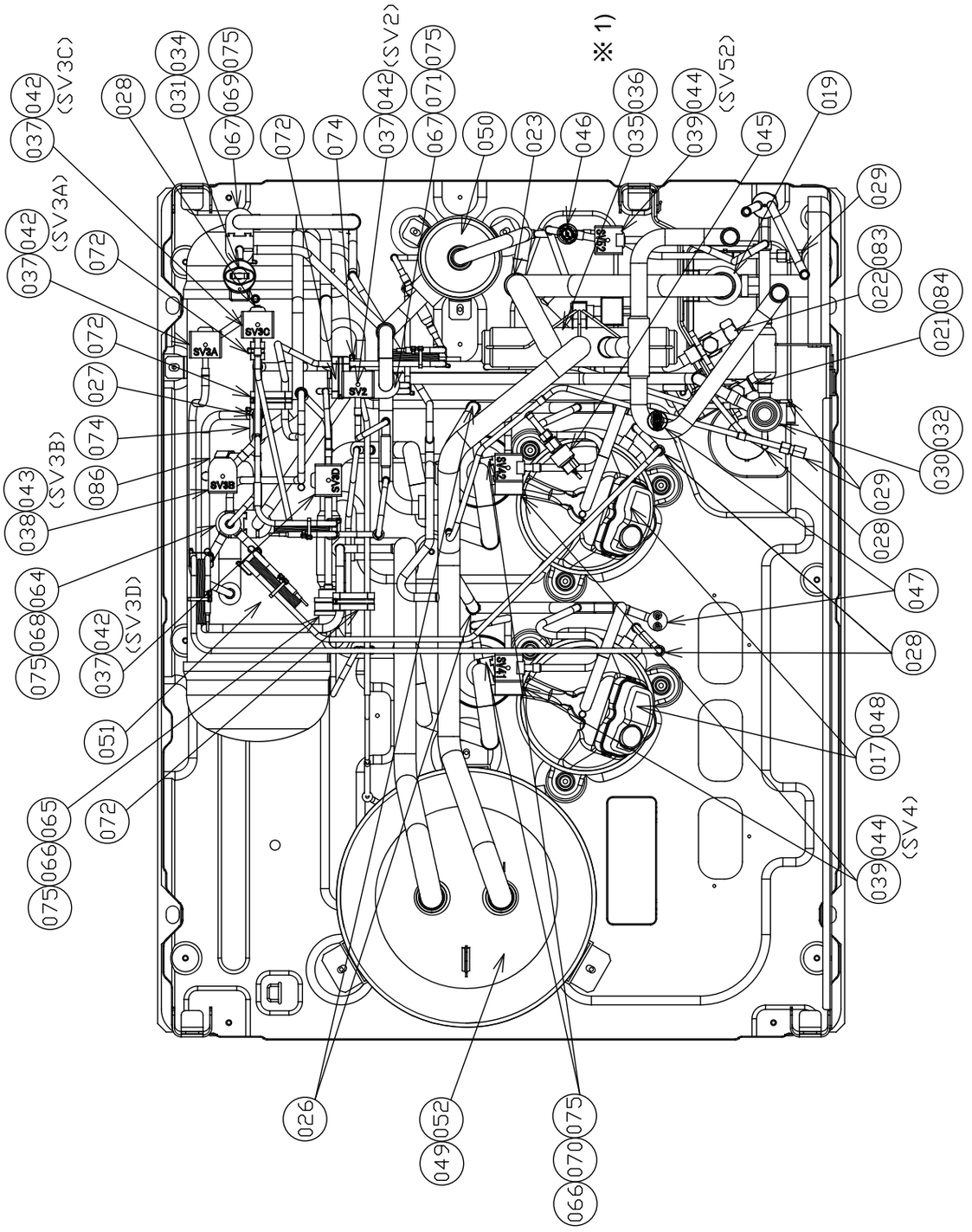

※ 1) There is no part for T8(J)P-E model.

For HT8(J)P-E, HT8(J)P-TR model

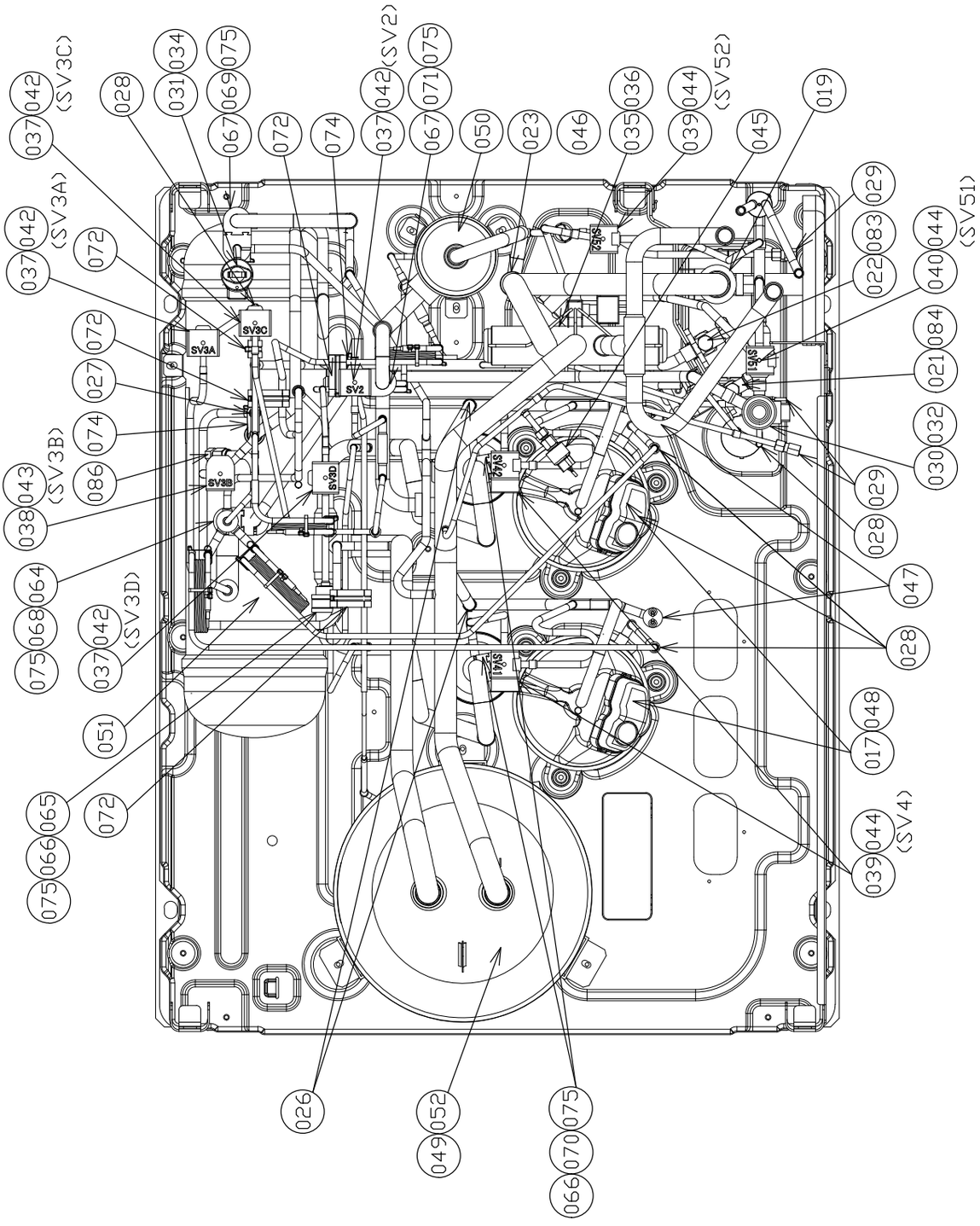

For T8(J)P, T7(J)P, T8P-SG, T8(J)P-ID, T8(J)P-T model

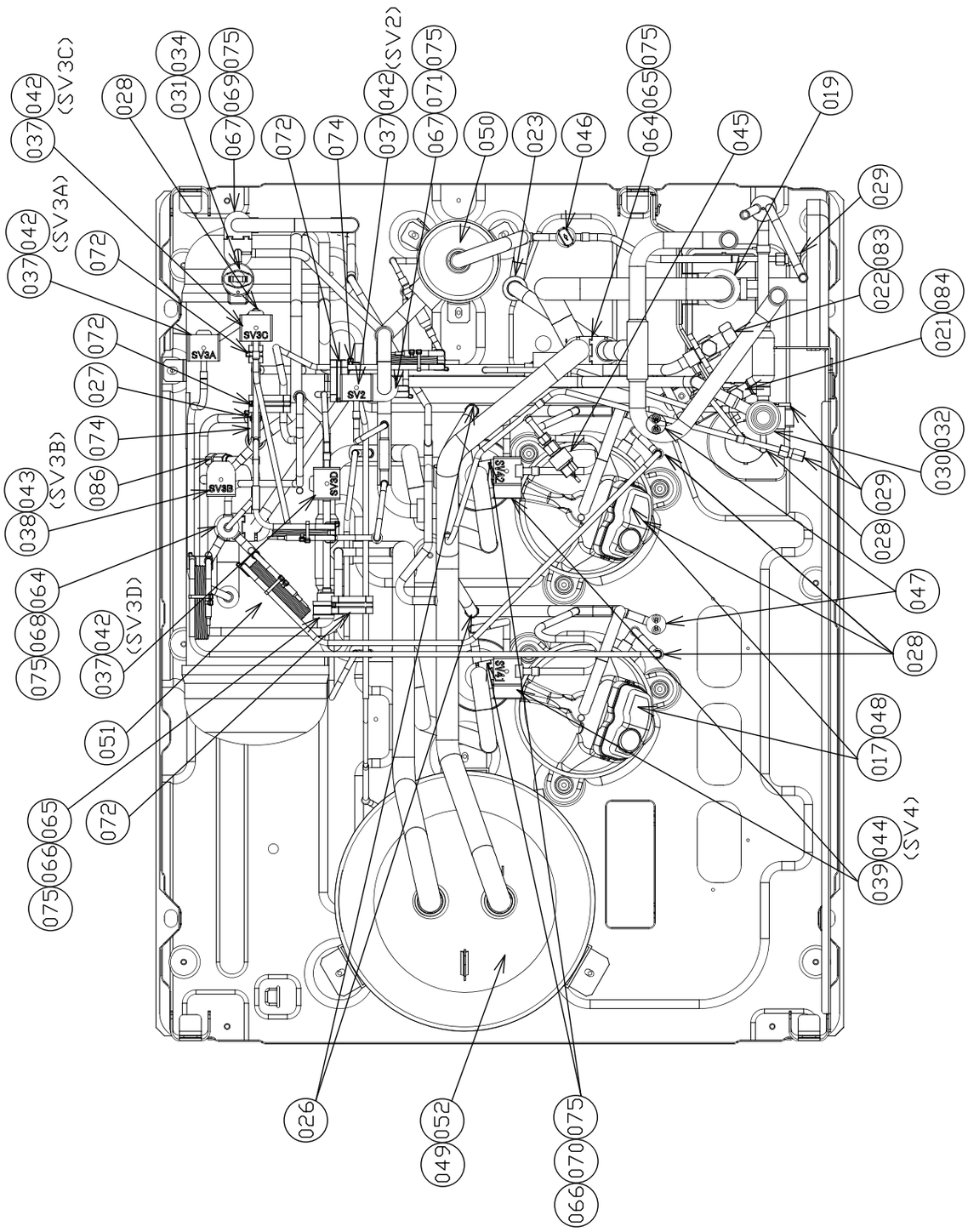

Outdoor Unit (8, 10, 12HP)
Model: MMY-MAP0806*, MMY-MAP1006*, MMY-MAP1206*
REFRIGERATION CIRCUIT DIAGRAM (For HT8(J)P, HT7(J)P, HT8(J)P-ME, HT7P-ME, T8(J)P-E, HT8P-A model)

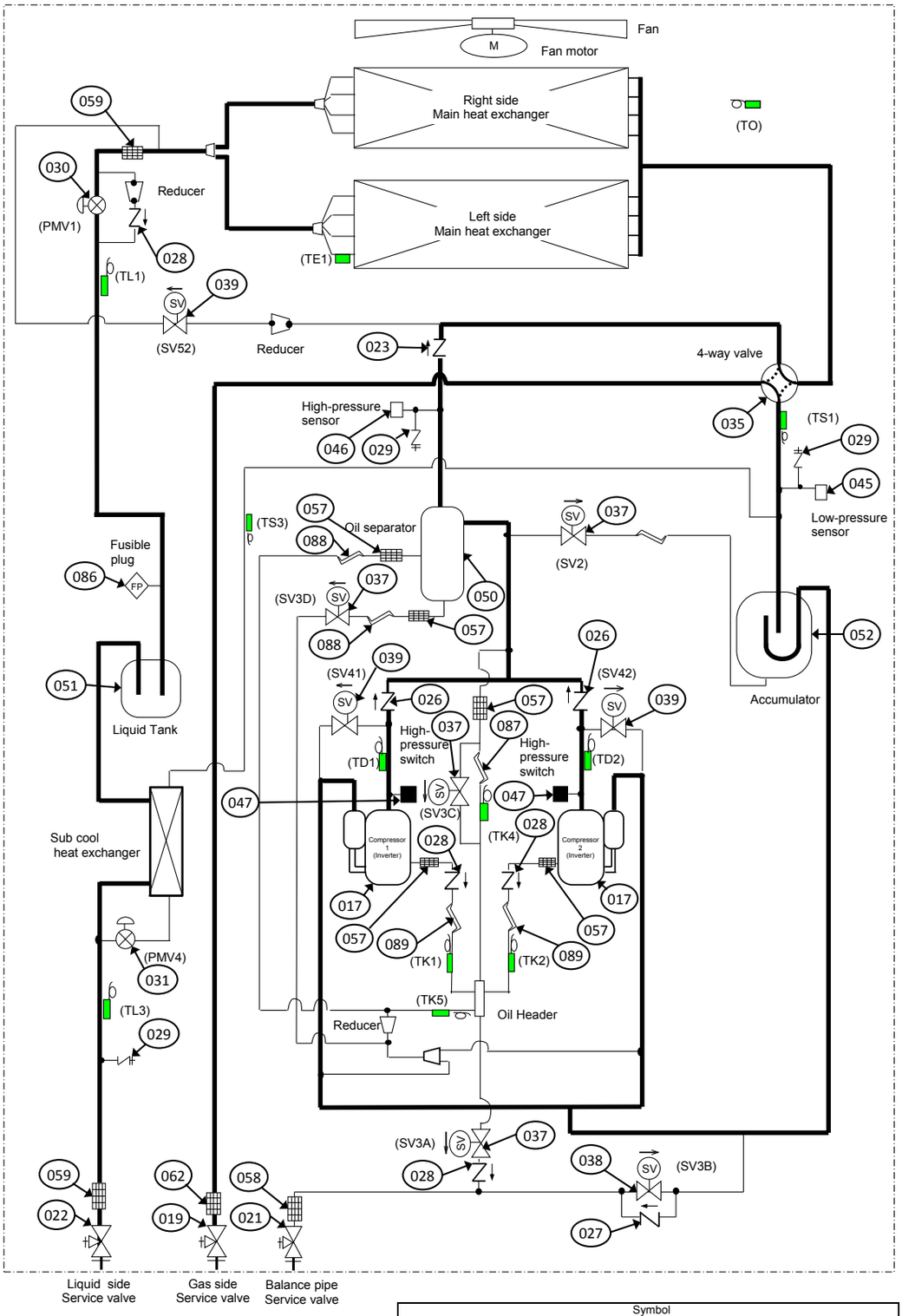

Symbol						
Solenoid valve	Capillary tube	Check valve	Check joint	Strainer	Temperature sensor	Distributor

Outdoor Unit (8, 10, 12HP)
Model: MMY-MAP0806*, MMY-MAP1006*, MMY-MAP1206*
REFRIGERATION CIRCUIT DIAGRAM (For HT8(J)P-E, HT8(J)P-TR model)

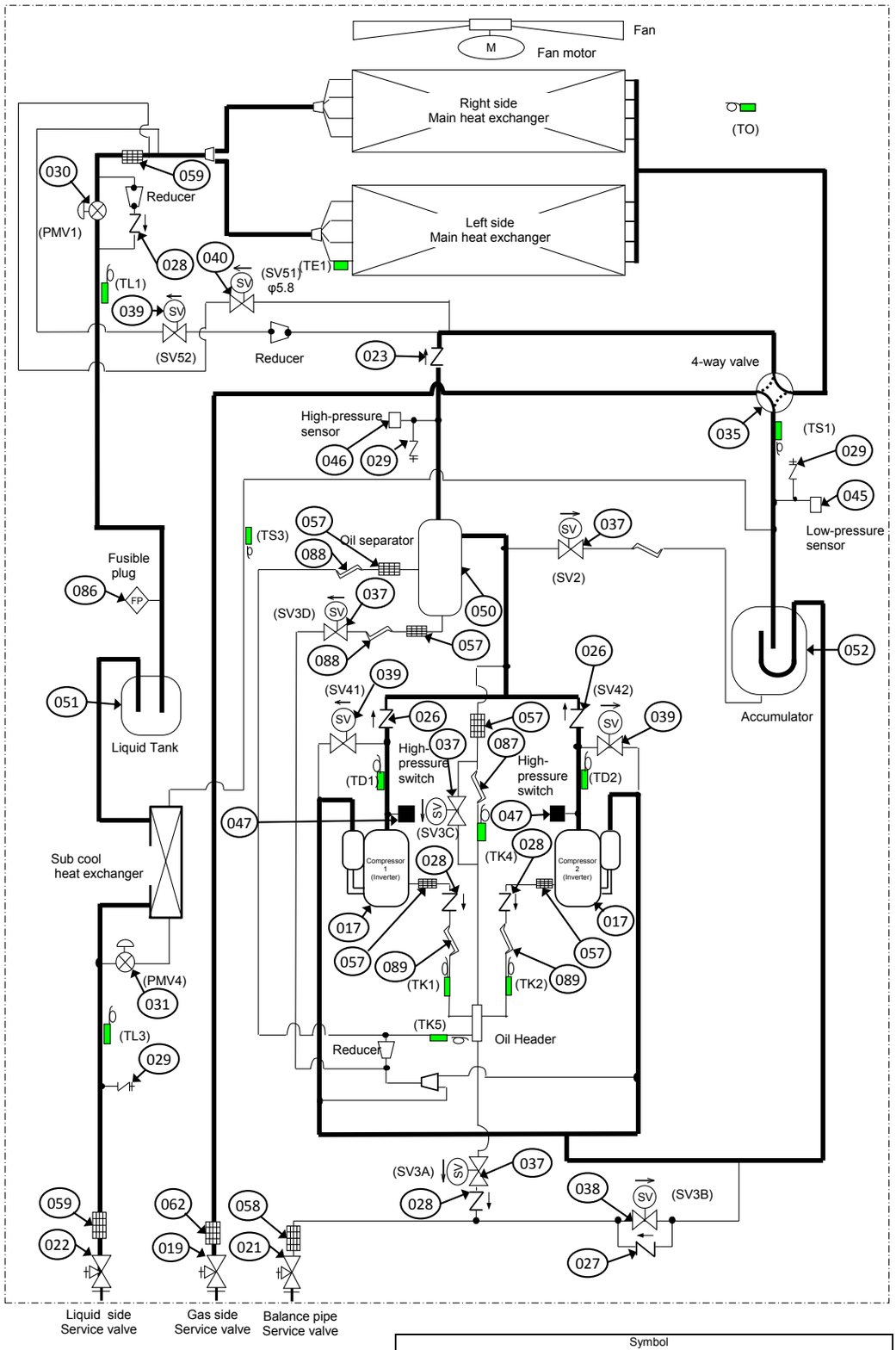

Symbol						
Solenoid valve	Capillary tube	Check valve	Check joint	Strainer	Temperature sensor	Distributor

Outdoor Unit (8, 10, 12, 14HP)

Model : MMY-MAP0806T*, MMY-MAP1006T*, MMY-MAP1206T*, MMY-MAP14B6T*

REFRIGERATION CIRCUIT DIAGRAM (For T8(J)P, T7(J)P, T8P-SG, T8(J)P-ID, T8(J)P-T model)

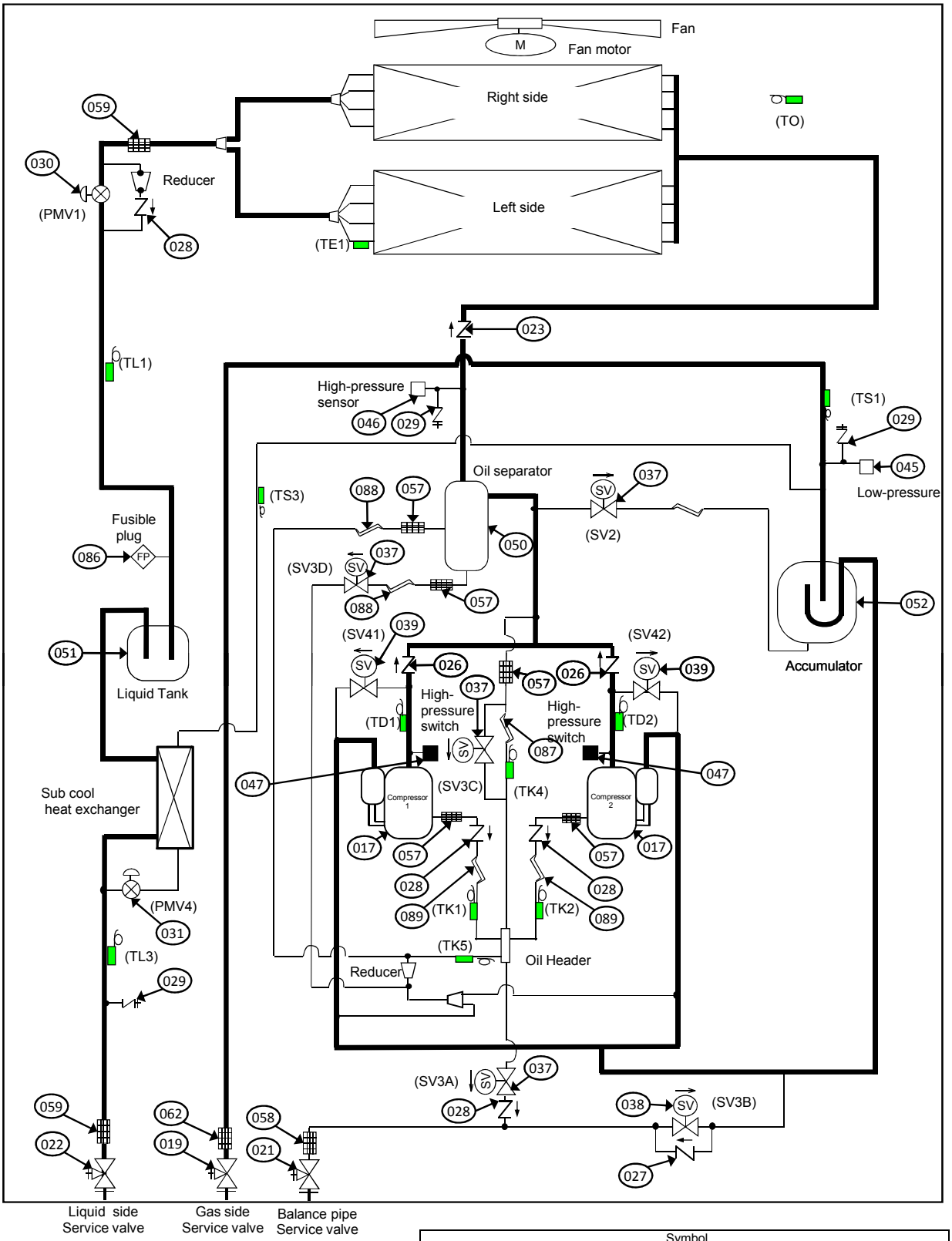

Symbol						
Solenoid valve	Capillary tube	Check valve	Check joint	Strainer	Temperature sensor	Distributor

SMMS-e OUTDOOR UNIT
MMY-MAP1406HT8(J)P, MAP1606HT8(J)P
MMY-MAP1406HT7(J)P, MAP1606HT7(J)P
MMY-MAP1406HT8(J)P-ME, MAP1606HT8(J)P-ME
MMY-MAP1406HT7P-ME, MAP1606HT7P-ME
MMY-MAP1406HT8(J)P-E, MAP1606HT8(J)P-E
MMY-MAP1406T8(J)P-E, MAP1606T8(J)P-E
MMY-MAP1406HT8(J)P-TR, MAP1606HT8(J)P-TR
MMY-MAP1406HT8P-A, MAP1606HT8P-A
MMY-MAP1406T8(J)P, MAP1606T8(J)P, MAP18B6T8(J)P
MMY-MAP1406T7(J)P, MAP1606T7(J)P, MAP18B6T7(J)P
MMY-MAP1406T8P-SG, MAP1606T8P-SG, MAP18B6T8P-SG
MMY-MAP1406T8(J)P-ID, MAP1606T8(J)P-ID MAP18B6T8(J)P-ID
MMY-MAP1406T8(J)P-T, MAP1606T8(J)P-T, MAP18B6T8(J)P-T
MMY-MAP1606HT8P-C

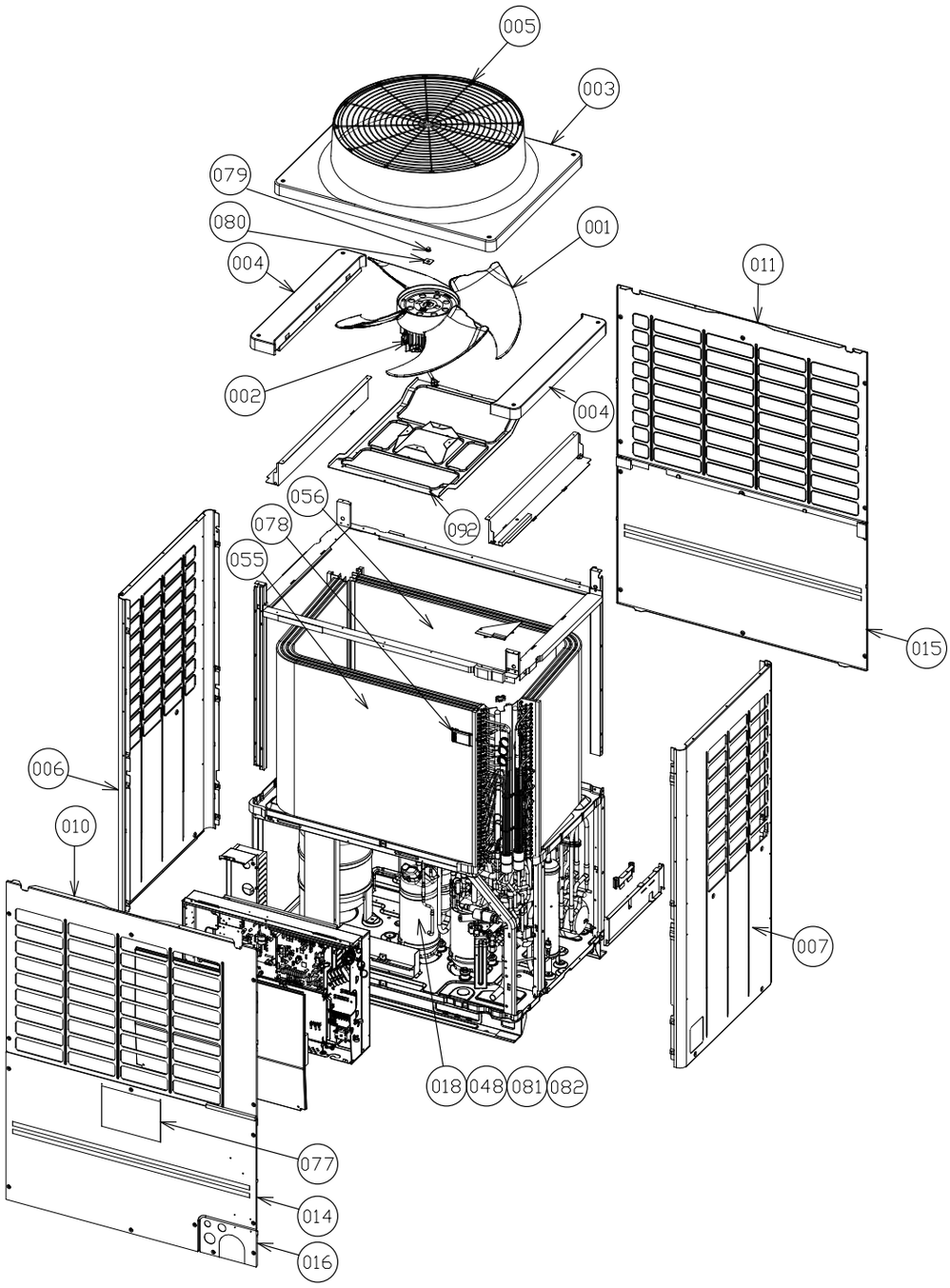

For HT8(J)P, HT7(J)P, HT8(J)P-ME, HT7P-ME, T8(J)P-E, HT8P-A, HT8P-C model

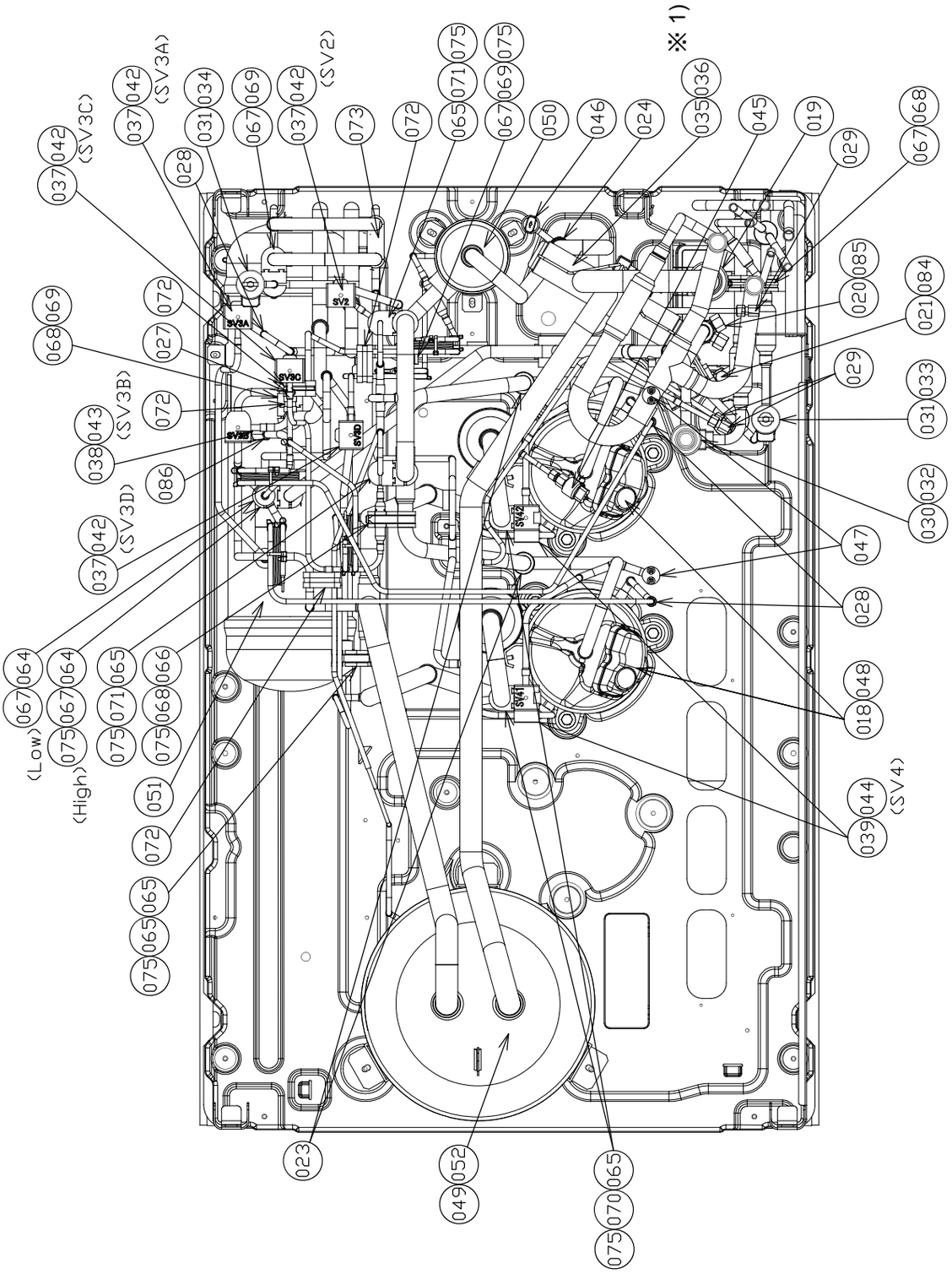

※ 1) There is no part for T8(J)P-E model.

For HT8(J)P-E, HT8(J)P-TR model

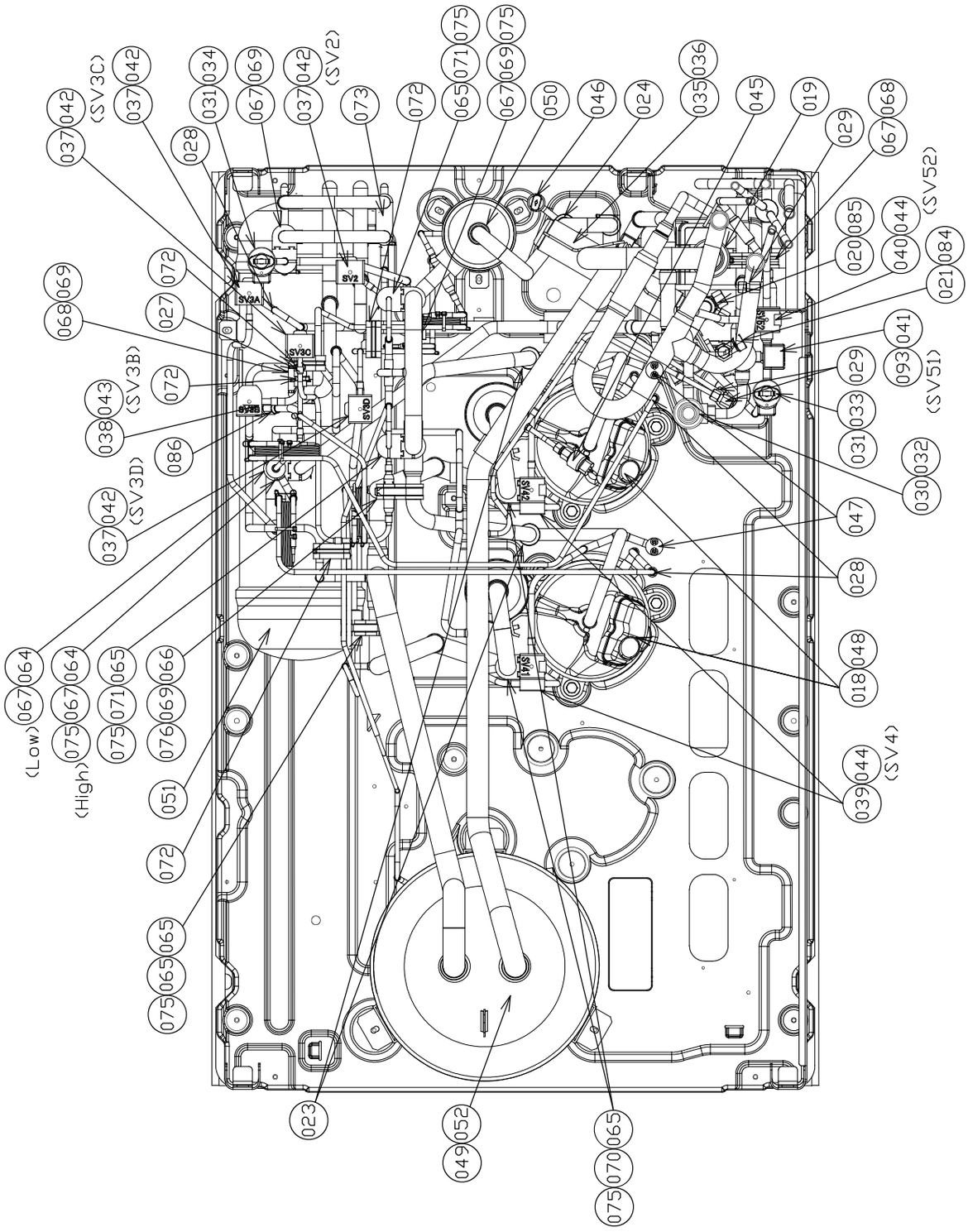

For T8(J)P, T7(J)P, T8P-SG, T8(J)P-ID, T8(J)P-T model

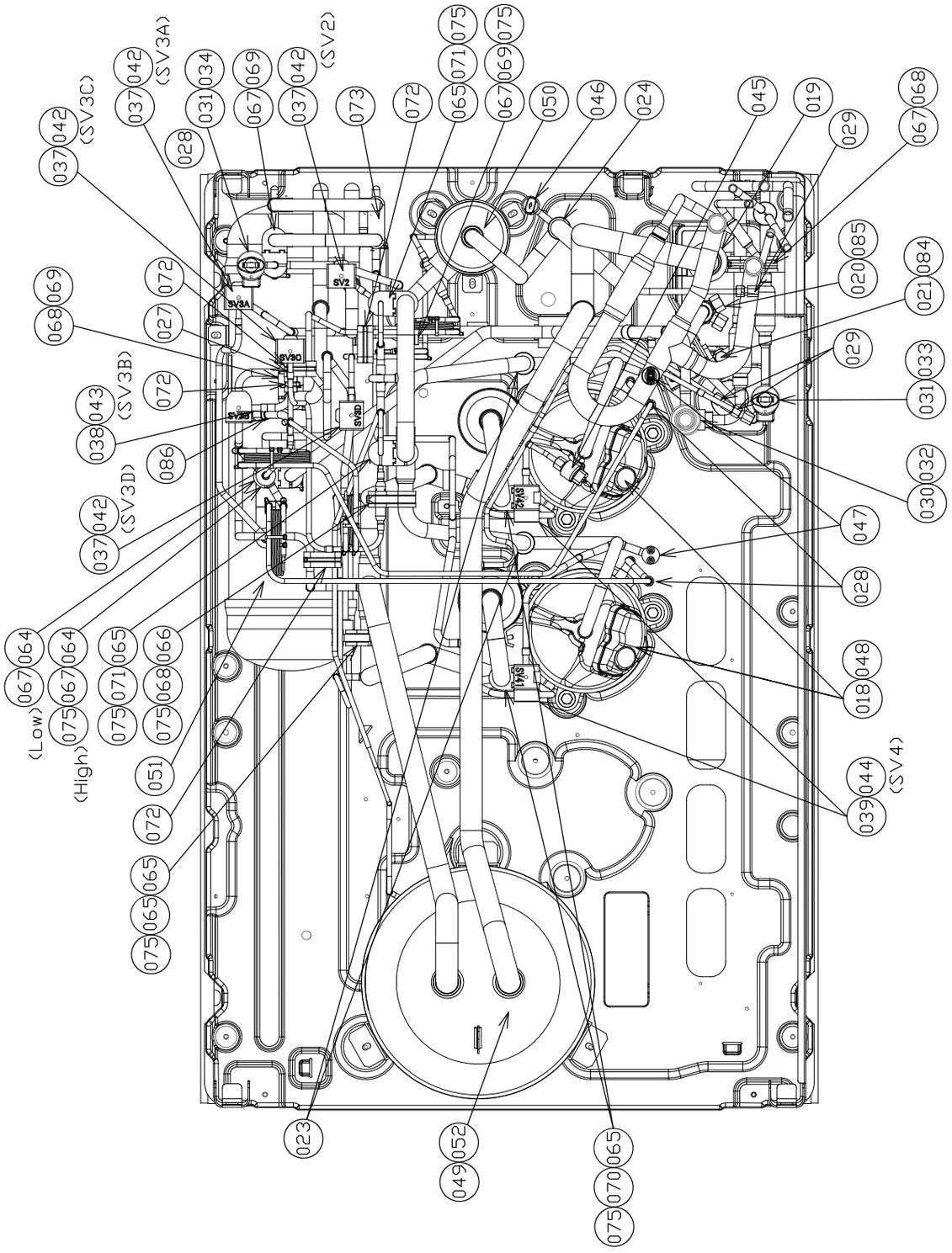

Outdoor Unit (14, 16HP)
Model: MMY-MAP1406∗, MMY-MAP1606∗
REFRIGERATION CIRCUIT DIAGRAM **(For HT8(J)P, HT7(J)P, HT8(J)P-ME, HT7P-ME, T8(J)P-E, HT8P-A, HT8P-C model)**

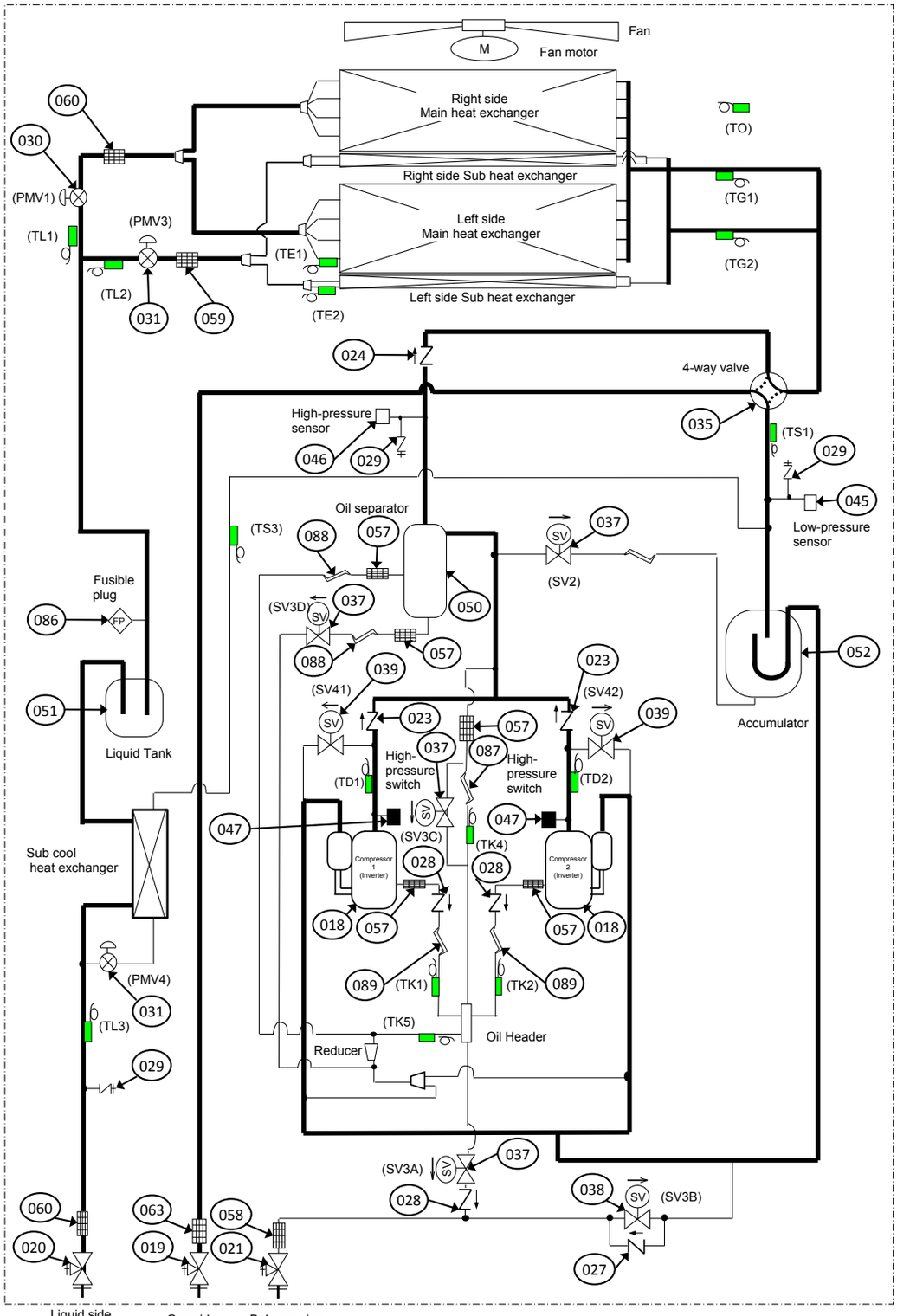

Symbol						
Solenoid valve	Capillary tube	Check valve	Check joint	Strainer	Temperature sensor	Distributor

Outdoor Unit (14, 16HP)
Model: MMY-MAP1406*, MMY-MAP1606*
REFRIGERATION CIRCUIT DIAGRAM

(For HT8(J)P-E, HT8(J)P-TR model)

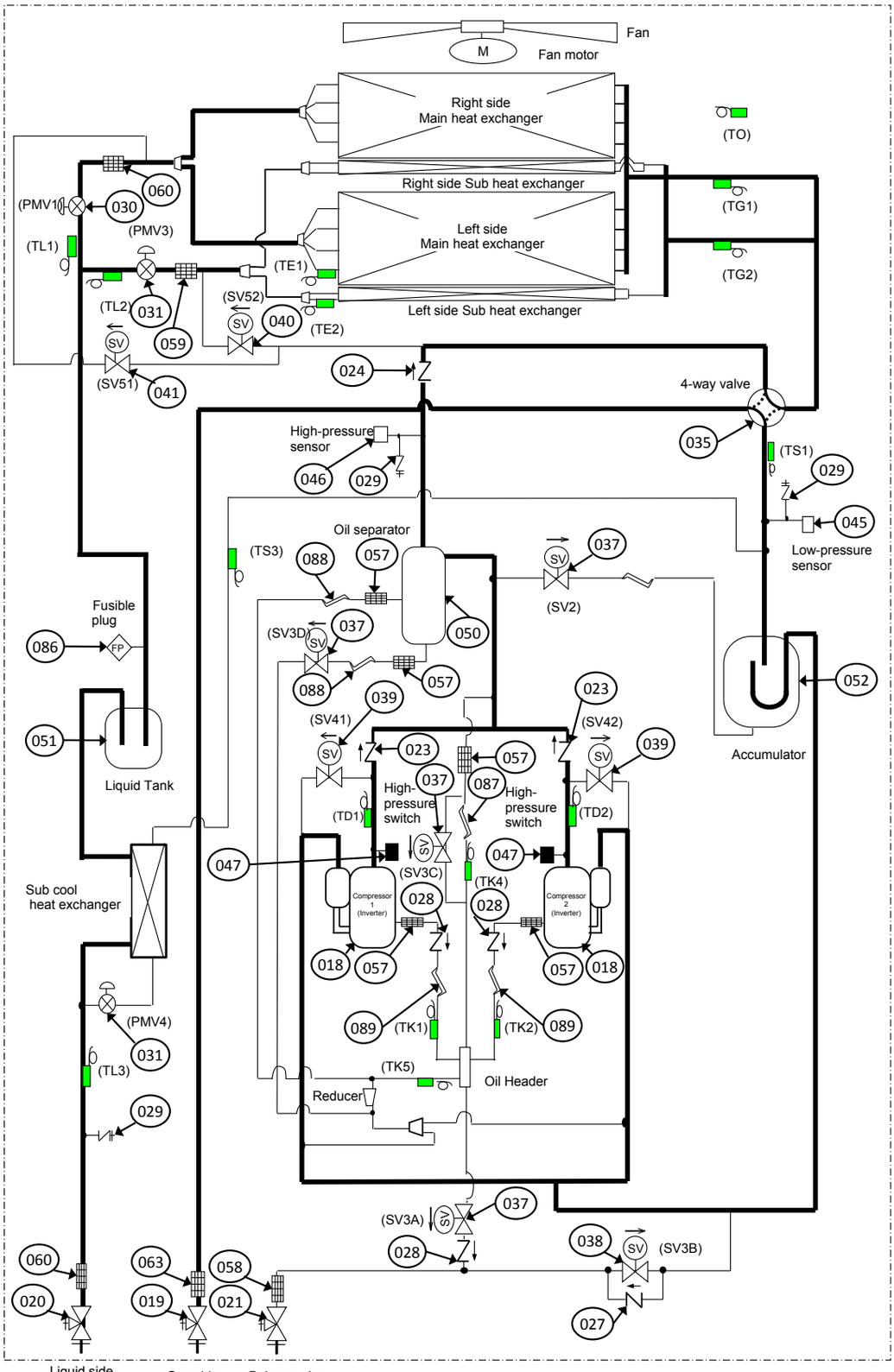

Symbol						
Solenoid valve	Capillary tube	Check valve	Check joint	Strainer	Temperature sensor	Distributor

Outdoor Unit (14, 16, 18HP)

Model : MMY-MAP1406T*, MMY-MAP1606T*, MMY-MAP16B6T*

REFRIGERATION CIRCUIT DIAGRAM **(For T8(J)P, T7(J)P, T8P-SG, T8(J)P-ID, T8(J)P-T model)**

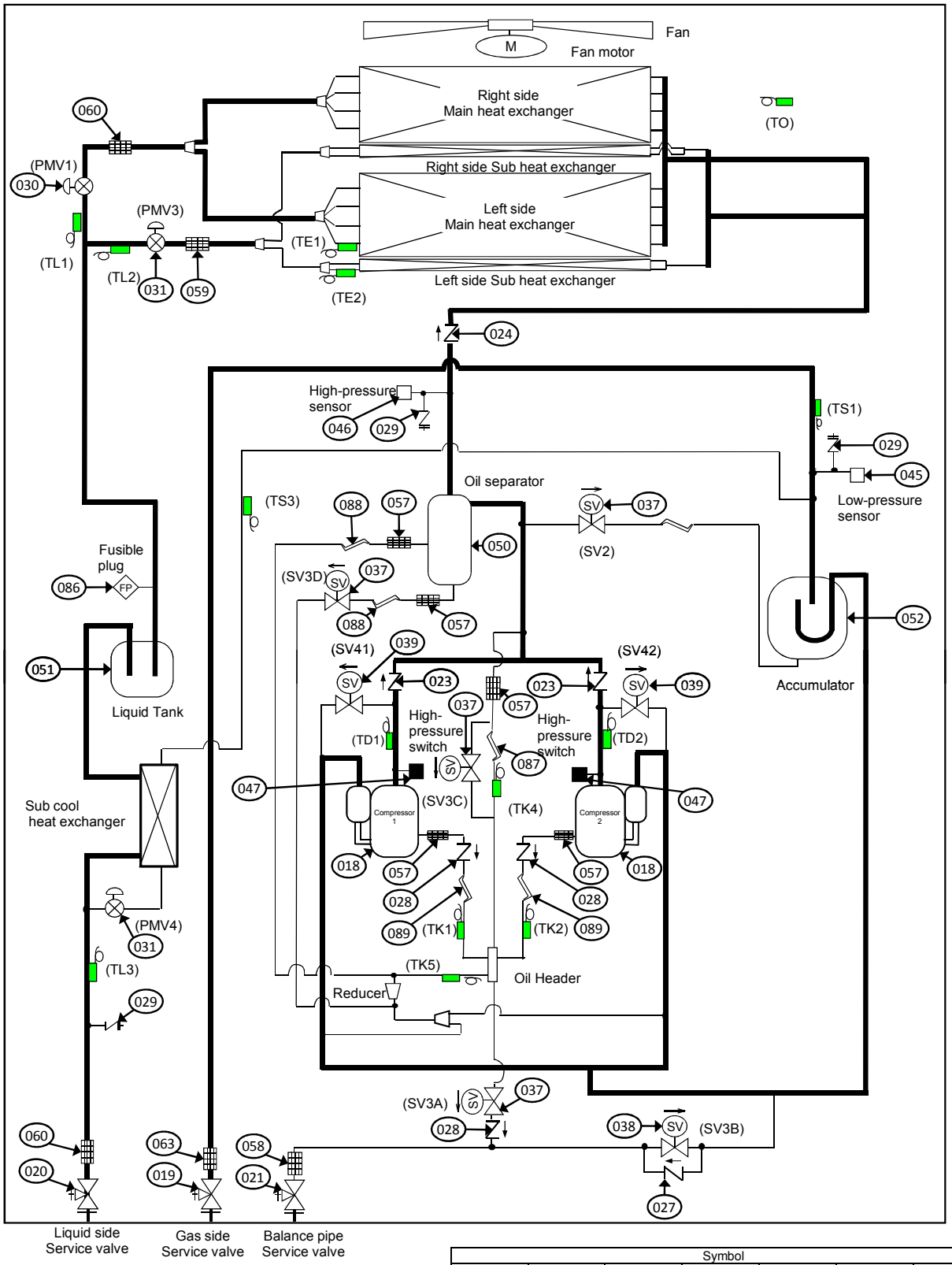

Symbol						
Solenoid valve	Capillary tube	Check valve	Check joint	Strainer	Temperature sensor	Distributor

SMMS-e OUTDOOR UNIT

MMY-MAP1806HT8(J)P, MAP2006HT8(J)P, MAP2206HT8(J)P
MMY-MAP1806HT7(J)P, MAP2006HT7(J)P, MAP2206HT7(J)P
MMY-MAP1806HT8(J)P-ME, MAP2006HT8(J)P-ME
MMY-MAP1806HT7P-ME, MAP2006HT7P-ME
MMY-MAP1806HT8(J)P-E, MAP2006HT8(J)P-E, MAP2206HT8(J)P-E
MMY-MAP1806T8(J)P-E, MAP2006T8(J)P-E, MAP2206T8(J)P-E
MMY-MAP1806HT8(J)P-TR, MAP2006HT8(J)P-TR, MAP2206HT8(J)P-TR
MMY-MAP1806HT8P-A, MAP2006HT8P-A
MMY-MAP1806T8(J)P, MAP2006T8(J)P, MAP2206T8(J)P
MMY-MAP1806T7(J)P, MAP2006T7(J)P, MAP2206T7(J)P
MMY-MAP1806T8P-SG, MAP2006T8P-SG, MAP2206T8P-SG
MMY-MAP1806T8(J)P-ID, MAP2006T8(J)P-ID, MAP2206T8(J)P-ID
MMY-MAP1806T8(J)P-T, MAP2006T8(J)P-T, MAP2206T8(J)P-T
MMY-MAP1806HT8P-C, 2006HT8P-C, 2206HT8P-C

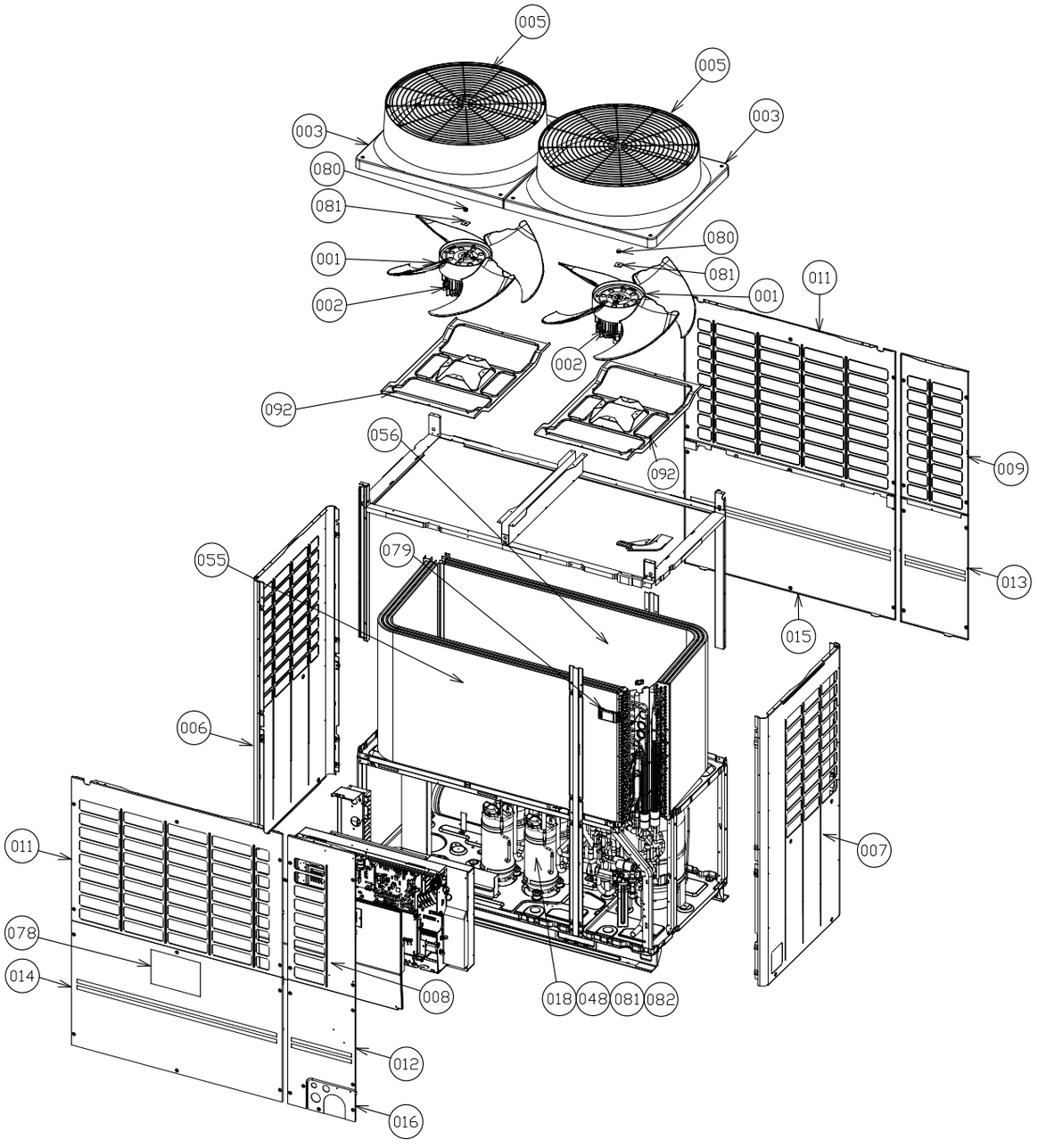

For HT8(J)P, HT7(J)P, HT8(J)P-ME, HT7P-ME, T8(J)P-E, HT8P-A, HT8P-C model

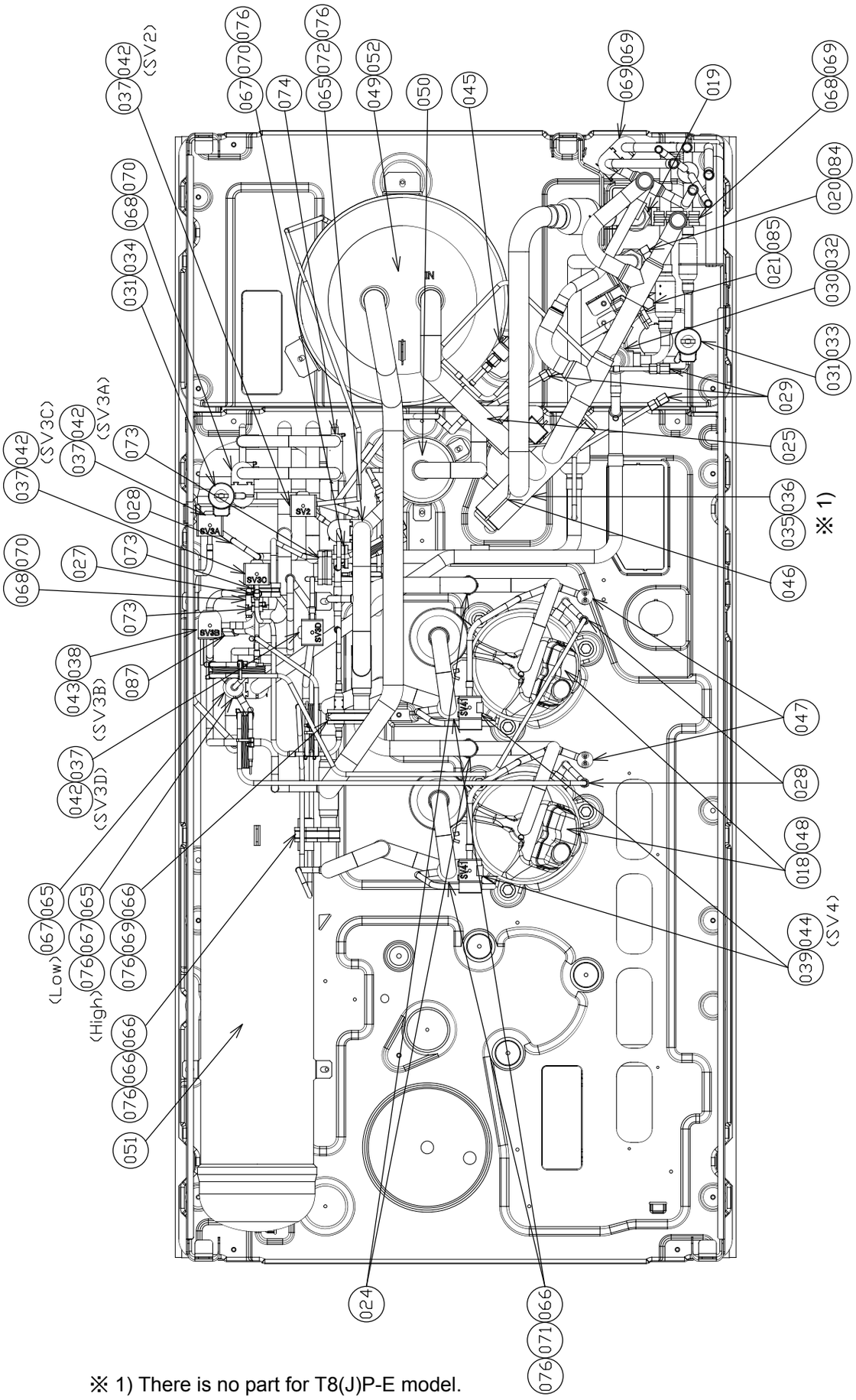

※ 1) There is no part for T8(J)P-E model.

For HT8(J)P-E, HT8(J)P-TR model

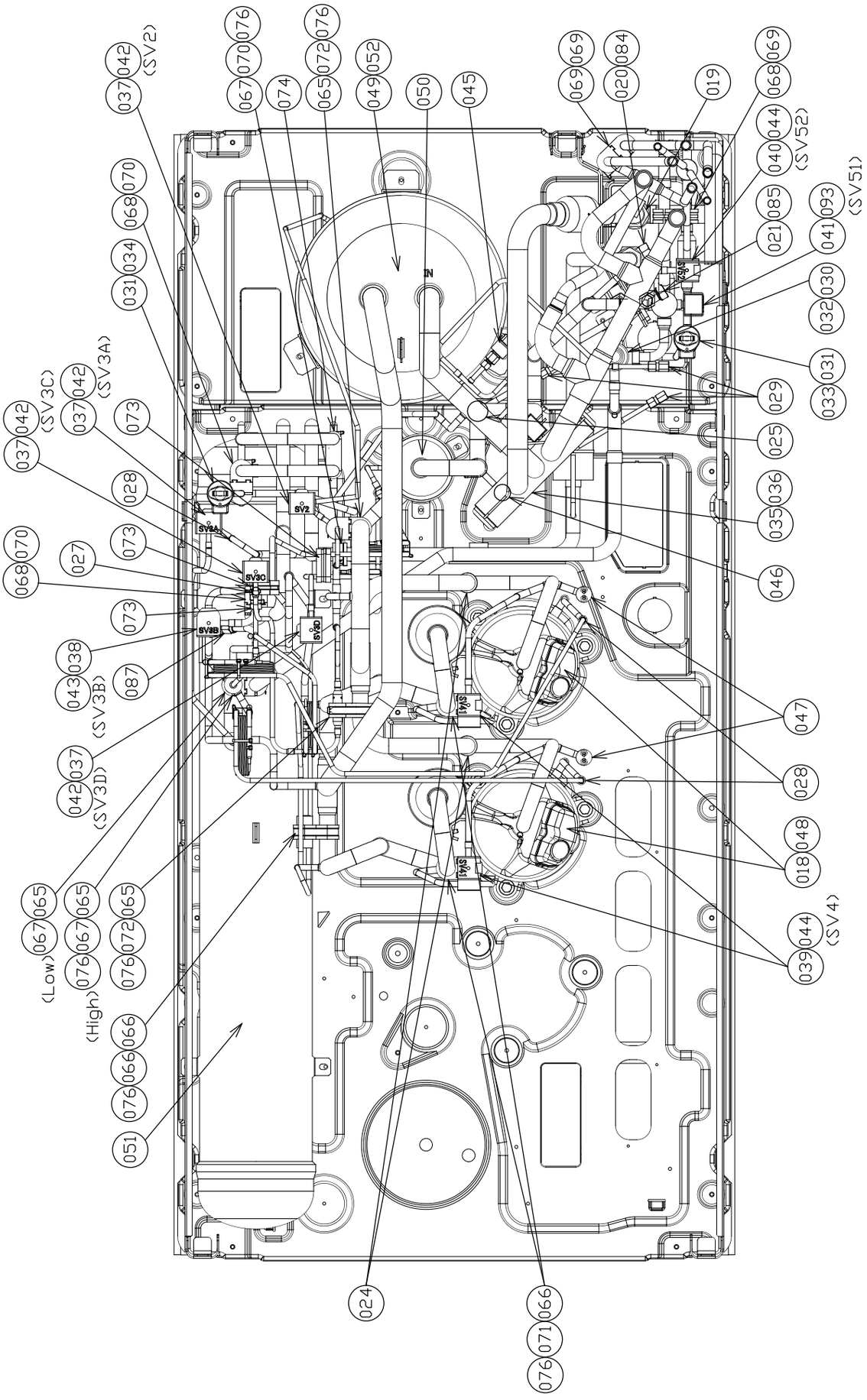

For T8(J)P, T7(J)P, T8P-SG, T8(J)P-ID, T8(J)P-T model

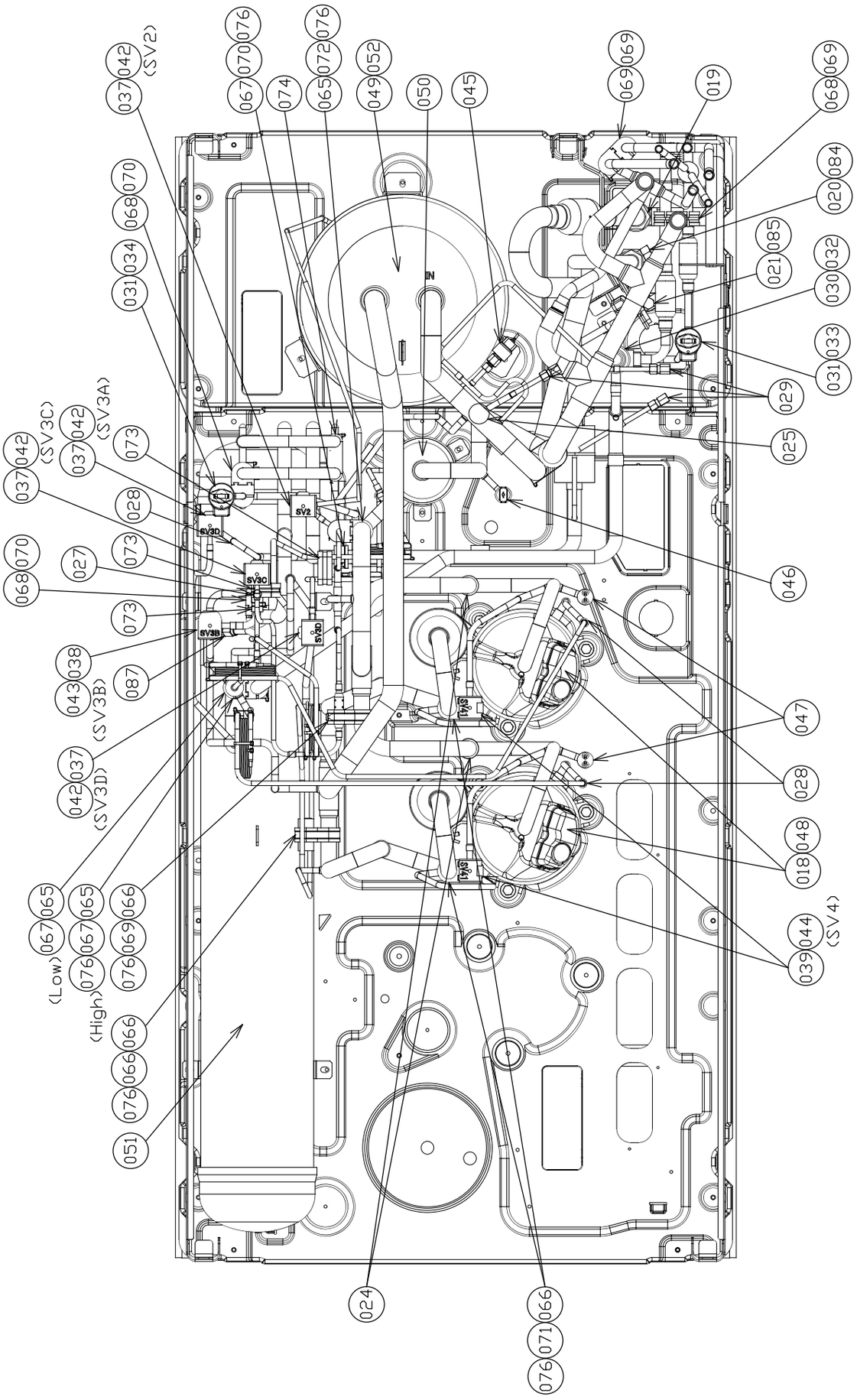

Outdoor Unit (18, 20, 22HP)
Model: MMY-MAP1806*, MMY-MAP2006*, MMYMAP2206*
REFRIGERATION CIRCUIT DIAGRAM

(For HT8(J)P, HT7(J)P, HT8(J)P-ME, HT7P-ME, T8(J)P-E, HT8P-A, HT8P-C model)

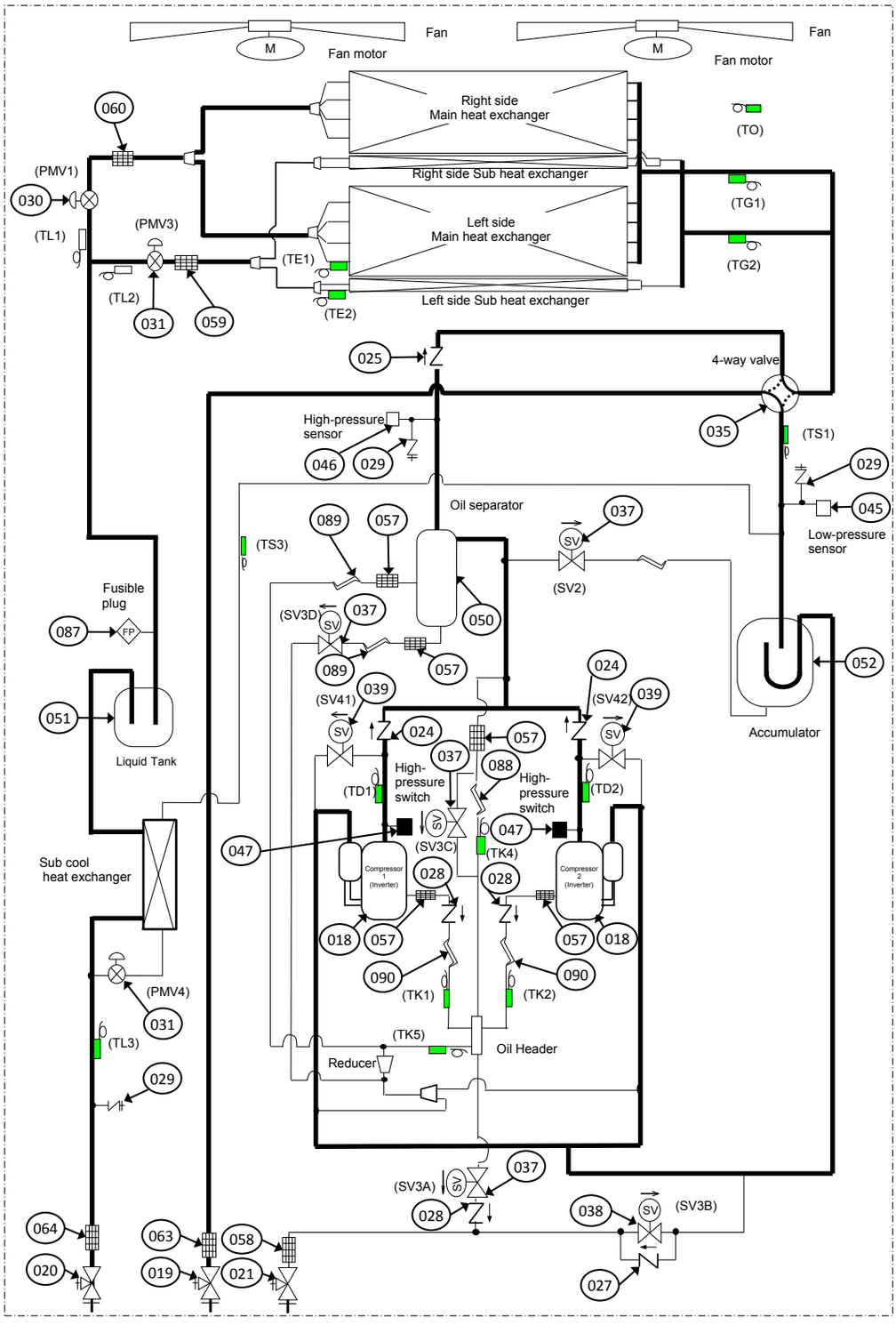

Symbol						
Solenoid valve	Capillary tube	Check valve	Check joint	Strainer	Temperature sensor	Distributor

Outdoor Unit (18, 20, 22HP)
Model: MMY-MAP1806∗ , MMY-MAP2006∗ , MMY-MAP2206∗
REFRIGERATION CIRCUIT DIAGRAM **(For HT8(J)P-E, HT8(J)P-TR model)**

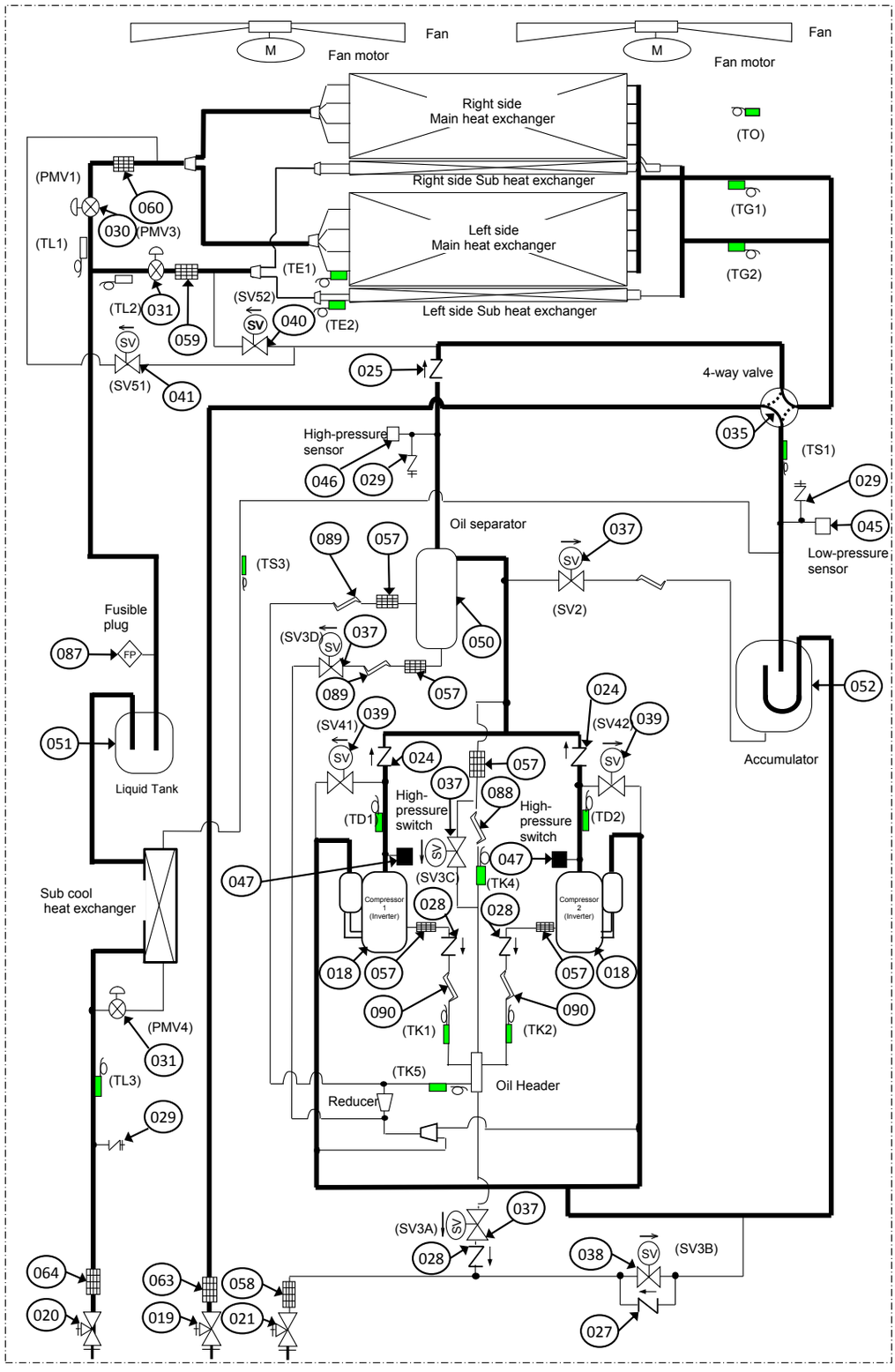

Symbol						
Solenoid valve	Capillary tube	Check valve	Check joint	Strainer	Temperature sensor	Distributor

Outdoor Unit (18, 20, 22HP)

Model : MMY-MAP1806T∗, MMY-MAP2006T∗, MMY-MAP2206T∗

REFRIGERATION CIRCUIT DIAGRAM (For T8(J)P, T7(J)P, T8P-SG, T8(J)P-ID, T8(J)P-T model)

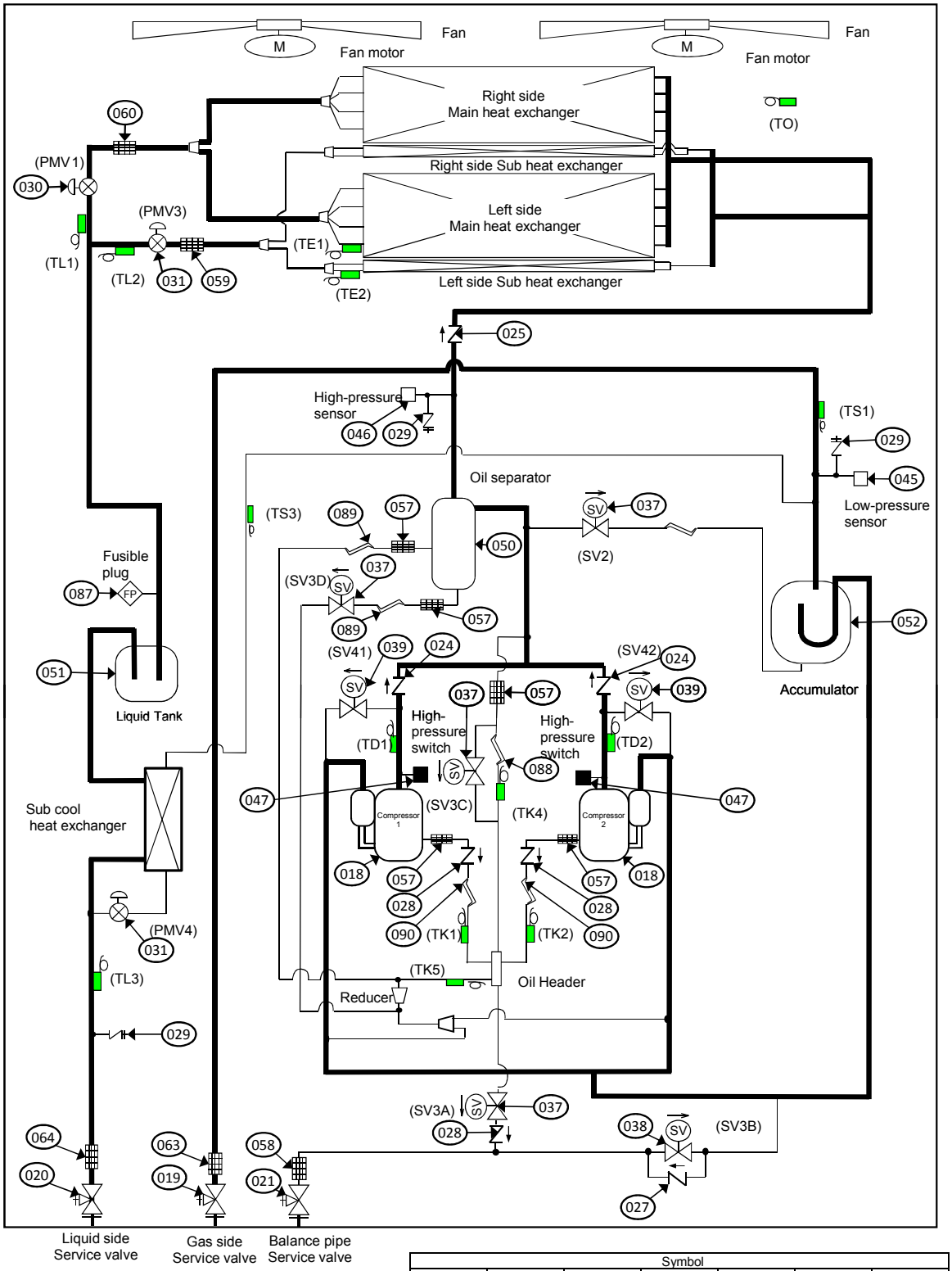

Symbol						
Solenoid valve	Capillary tube	Check valve	Check joint	Strainer	Temperature sensor	Distributor

For HT8(J)P, HT7(J)P, HT8(J)P-ME, HT7P-ME, T8(J)P-E, HT8P-A model

Ref. No.	Part No.	Description	Q'ty/Set MMY-				
			MAP0806 (H)T*(J)P	MAP1006 (H)T*(J)P	MAP1206 (H)T*(J)P	MAP1406 (H)T*(J)	MAP1606 (H)T*(J)
001	43T20341	FAN, PROPELLER	1	1	1	1	1
002	43T20342	MOTOR, FAN, DC530-620V, 2300L	1	1	1	1	1
003	43T19354	CABINET, AIR OUTLET	1	1	1	1	1
004	43T19355	CABINET, SIDE, UP				2	2
005	43T19353	GUARD, FAN	1	1	1	1	1
006	43T00613	CABINET ASSY, SIDE, LEFT	1	1	1	1	1
007	43T00614	CABINET ASSY, SIDE, RIGHT	1	1	1	1	1
008	43T00624	CABINET, AIR INLET, FRONT	1	1	1		
009	43T00620	CABINET, AIR INLET, BACK	1	1	1		
010	43T00625	CABINET, AIR INLET, FRONT				1	1
011	43T00622	CABINET, AIR INLET, BACK				1	1
012	43T00615	CABINET ASSY, FRONT, DOWN	1	1	1		
013	43T00616	CABINET ASSY, BACK, DOWN	1	1	1		
014	43T00617	CABINET ASSY, FRONT, DOWN				1	1
015	43T00618	CABINET ASSY, BACK, DOWN				1	1
016	43T00623	PANEL	1	1	1	1	1
017*5	43T41458	COMPRESSOR, RA421A3TB-20MD	2	2	2		
018*5	43T41485	COMPRESSOR, RA641A3TB-20M				2	2
019	43T46393	VALVE, BALL, 25.4	1	1	1	1	1
020	43T46381	VALVE, BALL, SBV-JA5GTC-1				1	1
021	43T46366	VALVE, PACKED, 9.52	1	1	1	1	1
022	43T46374	VALVE, PACKED, 12.7	1	1	1		
023	43T46444	VALVE, CHECK, UCV-A1505DRQ5	1	1	1	2	2
024	43T46445	VALVE, CHECK, UCV-A1506DRQ5				1	1
026	43T46398	VALVE, CHECKED, BCV-804DY	2	2	2		
027	43T46399	VALVE, CHECK, BCV-603DY	1	1	1	1	1
028	43T46400	VALVE, CHECKED, BCV-302DY	4	4	4	3	3
029	43T46409	JOINT,CHECK	3	3	3	3	3
030	43T46447	VALVE, PMV, PAM-BA2YGTF-1 (φ4.8)	1	1	1	1	1
031	43T46448	VALVE, PMV, UKV-25D100 (φ2.5)	1	1	1	2	2
032	43T46449	COIL, PMV	1	1	1	1	1
033	43T46450	COIL, PMV				1	1
034	43T46451	COIL, PMV	1	1	1	1	1
035	43T46452	VALVE, 4WAY, SHF-35B-67-04	1	1	1	1	1
036	43T46453 *1,3,6	COIL, SOLENOID, AC220-240V 50HZ	1	1	1	1	1
	43T46457 *2, 4	COIL, SOLENOID, AC208-230V 60HZ					
037	43T46454	VALVE, 2WAY, TEV-S1220DQ50	4	4	4	4	4
038	43T46411	VALVE , 2WAY, VPV-603DQ2	1	1	1	1	1
039	43T46412	VALVE, 2WAY, FDF3A06	3	3	3	2	2
042	43T46455 *1,3,6,7	COIL, VALVE, 2WAY, TEV-SMOAJ2170A1	4	4	4	4	4
	43T46458 *2, 4	COIL, VALVE, 2WAY, TEV-SMOAQ2247A1					
043	43T46403 *1,3,6,7	COIL, SOLENOID, VPV-MOAJ510B0	1	1	1	1	1
	43T46404 *2, 4	COIL, SOLENOID, VPV-MOAQ1843A0					
044	43T46405 *1,3,6,7	COIL, VALVE, 2WAY, FQ-G593	3	3	3	2	2
	43T46406 *2, 4	COIL, VALVE, 2WAY, FQ-D640					
045	43T50357	SENSOR ASSY, LOW PRESSURE	1	1	1	1	1
046	43T50358	SENSOR ASSY, HIGH PRESSURE	1	1	1	1	1
047	43T63359	SWITCH, PRESSURE	2	2	2	2	2
048	43T57303	HEATER, CASE, 29W 240V	2	2	2	2	2
049	43T57304	HEATER, CASE, 55W 240V	1	1	1	1	1
050	43T48314	SEPARATOR	1	1	1	1	1
051	43T48315	TANK, LIQUID	1	1	1	1	1
052	43T48313	ACCUMULATOR	1	1	1	1	1
053	43T43523	CONDENSER ASSY, TWO ROW, LEFT	1	1	1		
054	43T43524	CONDENSER ASSY, TWO ROW, RIGHT	1	1	1		
055	43T43525	CONDENSER ASSY, THREE ROW, LEFT				1	1
056	43T43526	CONDENSER ASSY, THREE ROW, RIGHT				1	1

*1) For HT8(J)P model
*2) For HT7(J)P model
*3) For HT8(J)P-ME model
*4) For HT7P-ME model
*5) Due to the service compressor for Brazil is now acquiring
the INMETRO certification (No371/328/163/ (402),
we don't carry it as a service parts.
Thus please contact the sales company when necessary.
*6) For HT8P-A model
*7) For T8(J)P-E model

Ref. No.	Part No.	Description	Q'ty/Set MMY-				
			MAP0806 (H)T∗(J)P	MAP1006 (H)T∗(J)P	MAP1206 (H)T∗(J)P	MAP1406 (H)T∗(J)P	MAP1606 (H)T∗(J)P
057	43T47388	STRAINER	5	5	5	5	5
058	43T47389	STRAINER	1	1	1	1	1
059	43T47390	STRAINER	2	2	2	1	1
060	43T47392	STRAINER				2	2
062	43T47394	STRAINER	1	1	1		
063	43T47395	STRAINER				1	1
064	43T49348	RUBBER, SUPPORTER, PIPE	1	1	1	2	2
065	43T49349	RUBBER, SUPPORTER, PIPE	1	1	1	6	6
066	43T49350	RUBBER, SUPPORTER, PIPE	3	3	3	1	1
067	43T49351	RUBBER, SUPPORTER, PIPE	2	2	2	5	5
068	43T49352	RUBBER, SUPPORTER, PIPE	1	1	1	3	3
069	43T49353	RUBBER, SUPPORTER, PIPE	1	1	1	3	3
070	43T49354	RUBBER, SUPPORTER, PIPE	2	2	2	2	2
071	43T49355	RUBBER, SUPPORTER, PIPE	1	1	1	2	2
072	43T49347	RUBBER, SUPPORTER, PIPE	4	4	4	4	4
073	43T49365	RUBBER, SUPPORTER, PIPE				1	1
074	43T49360	RUBBER, SUPPORTER, PIPE	2	2	2		
075	43T49358	BAND, FIX	5	5	5	8	8
076	43T19333	HOLDER, SENSOR	11	11	11	15	15
077	43T01310	MARK, TOSHIBA	1	1	1	1	1
078	43T63358	HOLDER, NFC	1	1	1	1	1
079	43T39351	NUT, FLANGE	1	1	1	1	1
080	43T39350	WASHER	1	1	1	1	1
081	43T47385	BOLT, COMPRESSOR	6	6	6	6	6
082	43T49357	RUBBER, CUSHION	6	6	6	6	6
083	43T47333	BONNET, 1/2 IN	1	1	1		
084	43T47332	BONNET, 3/8 IN	1	1	1	1	1
085	43T47334	BONNET, 5/8 IN				1	1
086	43T49338	PLUG, FUSIBLE	1	1	1	1	1
087	43T47374	TUBE, CAPILLARY, ID 0.8	1	1	1	1	1
088	43T47375	TUBE, CAPILLARY, ID 1.0	1	1	1	1	1
089	43T47376	TUBE, CAPILLARY, ID 1.2	1	1	1	1	1
090	43T85592 *1	OWNER'S MANUAL	1	1	1	1	1
	43T85593 *2						
	43T85599 *7						
	43T85601 *3						
	43T85602 *4						
	43T85603 *6						
091							
092	43T00700	MOTOR,BASE	1	1	1	1	1

*1) For HT8(J)P model
*2) For HT7(J)P model
*3) For HT8(J)P-ME model
*4) For HT7P-ME model
*6) For HT8P-A model
*7) For T8(J)P-E model

Ref. No.	Part No.	Description	Q'ty/Set MMY-		
			MAP1806 HT∗(J)P	MAP2006 HT∗(J)P	MAP2206 HT∗(J)P
001	43T20341	FAN, PROPELLER	2	2	2
002	43T20343	MOTOR, FAN, DC530-620V, 3500L	2	2	2
003	43T19361	CABINET, AIR OUTLET	2	2	2
005	43T19353	GUARD, FAN	2	2	2
006	43T00663	CABINET ASSY, SIDE, LEFT	1	1	1
007	43T00664	CABINET ASSY, SIDE, RIGHT	1	1	1
008	43T00665	CABINET, AIR INLET, FRONT	1	1	1
009	43T00666	CABINET, AIR INLET, BACK	1	1	1
011	43T00622	CABINET, AIR INLET, BACK	2	2	2
012	43T00667	CABINET ASSY, FRONT, DOWN	1	1	1
013	43T00668	CABINET ASSY, BACK, DOWN	1	1	1
014	43T00669	CABINET ASSY, FRONT, DOWN	1	1	1
015	43T00618	CABINET ASSY, BACK, DOWN	1	1	1
016	43T00623	PANEL	1	1	1
018*6	43T41485	COMPRESSOR, RA641A3TB-20M	2	2	2
019	43T46393	VALVE, BALL, 25.4	1	1	1
020	43T46456	VALVE, BALL, SBV-JA6GTC-1	1	1	1
021	43T46366	VALVE, PACKED, 9.52	1	1	1
024	43T46445	VALVE, CHECK, UCV-A1506DRQ5	2	2	2
025	43T46446	VALVE, CHECK, UCV-A1507DR	1	1	1
027	43T46399	VALVE, CHECK, BCV-603DY	1	1	1
028	43T46400	VALVE, CHECKED, BCV-302DY	3	3	3
029	43T46409	JOINT,CHECK	3	3	3
030	43T46447	VALVE, PMV, PAM-BA2YGTF-1（φ4.8）	1	1	1
031	43T46448	VALVE, PMV, UKV-25D100 (φ2.5)	2	2	2
032	43T46449	COIL, PMV	1	1	1
033	43T46450	COIL, PMV	1	1	1
034	43T46451	COIL, PMV	1	1	1
035	43T46452	VALVE, 4WAY, SHF-35B-67-04	1	1	1
036	43T46453 *2,4,7	COIL, SOLENOID, AC220-240V 50HZ	1	1	1
	43T46457 *3, 5	COIL, SOLENOID, AC208-230V 60HZ			
037	43T46454	VALVE, 2WAY, TEV-S1220DQ50	4	4	4
038	43T46411	VALVE , 2WAY, VPV-603DQ2	1	1	1
039	43T46412	VALVE, 2WAY, FDF3A06	2	2	2
042	43T46455 *2,4,7,8	COIL, VALVE, 2WAY, TEV-SMOAJ2170A1	4	4	4
	43T46458 *3, 5	COIL, VALVE, 2WAY, TEV-SMOAQ2247A1			
043	43T46403 *2,4,7,8	COIL, SOLENOID, VPV-MOAJ510B0	1	1	1
	43T46404 *3, 5	COIL, SOLENOID, VPV-MOAQ1843A0			
044	43T46405 *2,4,7,8	COIL, VALVE, 2WAY, FQ-G593	2	2	2
	43T46406 *3, 5	COIL, VALVE, 2WAY, FQ-D640			
045	43T50357	SENSOR ASSY, LOW PRESSURE	1	1	1
046	43T50358	SENSOR ASSY, HIGH PRESSURE	1	1	1
047	43T63359	SWITCH, PRESSURE	2	2	2
048	43T57303	HEATER, CASE, 29W 240V	2	2	2
049	43T57304	HEATER, CASE, 55W 240V	1	1	1
050	43T48314	SEPARATOR	1	1	1
051	43T48316	TANK, LIQUID	1	1	1
052	43T48312	ACCUMULATOR	1	1	1
055	43T43527	CONDENSER ASSY, THREE ROW, LEFT	1	1	1
056	43T43528	CONDENSER ASSY, THREE ROW, RIGHT	1	1	1

*1) There is no lineup for Middle-East and Australia/New Zealand 22HP models.
There is no anti-corrosion heavy protention models for 60Hz version of Middle-East.
*2) For HT8(J)P model
*3) For HT7(J)P model
*4) For HT8(J)P-ME model
*5) For HT7P-ME model
*6) Due to the service compressor for Brazil is now acquiring
the INMETRO certification (No371/328/163/ (402),
we don't carry it as a service parts.
Thus please contact the sales company when necessary.
*7) For HT8P-A model
*8) For T8(J)P-E model

Ref. No.	Part No.	Description	Q'ty/Set MMY-		
			MAP1806 (H)T∗(J)P	MAP2006 (H)T∗(J)P	MAP2206 (H)T∗(J)P
057	43T47388	STRAINER	5	5	5
058	43T47389	STRAINER	1	1	1
059	43T47390	STRAINER	1	1	1
060	43T47392	STRAINER	1	1	1
063	43T47395	STRAINER	1	1	1
064	43T47400	STRAINER	1	1	1
065	43T49348	RUBBER, SUPPORTER, PIPE	3	3	3
066	43T49349	RUBBER, SUPPORTER, PIPE	5	5	5
067	43T49350	RUBBER, SUPPORTER, PIPE	3	3	3
068	43T49351	RUBBER, SUPPORTER, PIPE	3	3	3
069	43T49352	RUBBER, SUPPORTER, PIPE	4	4	4
070	43T49353	RUBBER, SUPPORTER, PIPE	3	3	3
071	43T49354	RUBBER, SUPPORTER, PIPE	2	2	2
072	43T49355	RUBBER, SUPPORTER, PIPE	1	1	1
073	43T49347	RUBBER, SUPPORTER, PIPE	3	3	3
074	43T49365	RUBBER, SUPPORTER, PIPE	1	1	1
075	43T49360	RUBBER, SUPPORTER, PIPE	0	0	0
076	43T49358	BAND, FIX	7	7	7
077	43T19333	HOLDER, SENSOR	15	15	15
078	43T01310	MARK, TOSHIBA	1	1	1
079	43T63358	HOLDER, NFC	1	1	1
080	43T39351	NUT, FLANGE	2	2	2
081	43T39350	WASHER	2	2	2
082	43T47385	BOLT, COMPRESSOR	6	6	6
083	43T49357	RUBBER, CUSHION	6	6	6
084	43T47401	BONNET, 3/4 IN	1	1	1
085	43T47332	BONNET, 3/8 IN	1	1	1
087	43T49338	PLUG, FUSIBLE	1	1	1
088	43T47374	TUBE, CAPILLARY, ID 0.8	1	1	1
089	43T47375	TUBE, CAPILLARY, ID 1.0	1	1	1
090	43T47376	TUBE, CAPILLARY, ID 1.2	1	1	1
091	43T85592 *2	OWNER'S MANUAL	1	1	1
	43T85593 *3				
	43T85599 *8				
	43T85601 *4				
	43T85602 *5				
	43T85603 *7				
092	43T00700	MOTOR,BASE	2	2	2

*1) There is no lineup for Middle-East and Australia/New Zealand 22HP models.
There is no anti-corrosion heavy protention models for 60Hz version of Middle-East.
*2) For HT8(J)P model
*3) For HT7(J)P model
*4) For HT8(J)P-ME model
*5) For HT7P-ME model
*7) For HT8P-A model
*8) For T8(J)P-E model

For HT8(J)P-E, HT8(J)P-TR model

Ref. No.	Part No.	Description	Q'ty/Set MMY-				
			MAP0806 HT8(J)P	MAP1006 HT8(J)P	MAP1206 HT8(J)P	MAP1406 HT8(J)P	MAP1606 HT8(J)P
001	43T20341	FAN, PROPELLER	1	1	1	1	1
002	43T20342	MOTOR, FAN, DC530-620V, 2300L	1	1	1	1	1
003	43T19354	CABINET, AIR OUTLET	1	1	1	1	1
004	43T19355	CABINET, SIDE, UP				2	2
005	43T19359	GUARD, FAN	1	1	1	1	1
006	43T00613	CABINET ASSY, SIDE, LEFT	1	1	1	1	1
007	43T00614	CABINET ASSY, SIDE, RIGHT	1	1	1	1	1
008	43T00624	CABINET, AIR INLET, FRONT	1	1	1		
009	43T00620	CABINET, AIR INLET, BACK	1	1	1		
010	43T00625	CABINET, AIR INLET, FRONT				1	1
011	43T00622	CABINET, AIR INLET, BACK				1	1
012	43T00615	CABINET ASSY, FRONT, DOWN	1	1	1		
013	43T00616	CABINET ASSY, BACK, DOWN	1	1	1		
014	43T00617	CABINET ASSY, FRONT, DOWN				1	1
015	43T00618	CABINET ASSY, BACK, DOWN				1	1
016	43T00623	PANEL	1	1	1	1	1
017	43T41458	C0MPRESSOR, RA421A3TB-20MD	2	2	2		
018	43T41485	C0MPRESSOR, RA641A3TB-20M				2	2
019	43T46393	VALVE, BALL, 25.4	1	1	1	1	1
020	43T46381	VALVE, BALL, SBV-JA5GTC-1				1	1
021	43T46366	VALVE, PACKED, 9.52	1	1	1	1	1
022	43T46374	VALVE, PACKED, 12.7	1	1	1		
023	43T46444	VALVE, CHECK, UCV-A1505DRQ5	1	1	1	2	2
024	43T46445	VALVE, CHECK, UCV-A1506DRQ5				1	1
025							
026	43T46398	VALVE, CHECKED, BCV-804DY	2	2	2		
027	43T46399	VALVE, CHECK, BCV-603DY	1	1	1	1	1
028	43T46400	VALVE, CHECKED, BCV-302DY	4	4	4	3	3
029	43T46409	J0INT,CHECK	3	3	3	3	3
030	43T46447	VALVE, PMV, PAM-BA2YGTF-1 (φ4.8)	1	1	1	1	1
031	43T46448	VALVE, PMV, UKV-25D100 (φ2.5)	1	1	1	2	2
032	43T46449	COIL, PMV	1	1	1	1	1
033	43T46450	COIL, PMV				1	1
034	43T46451	COIL, PMV	1	1	1	1	1
035	43T46452	VALVE, 4WAY, SHF-35B-67-04	1	1	1	1	1
036	43T46453 *1	COIL, SOLENOID, AC220V-240 50HZ	1	1	1	1	1
037	43T46454	VALVE, 2WAY, TEV-S1220DQ50	4	4	4	4	4
038	43T46411	VALVE , 2WAY, VPV-603DQ2	1	1	1	1	1
039	43T46412	VALVE, 2WAY, FDF3A06	3	3	3	2	2
040	43T46459	VALVE, 2WAY, FDF6A42	1	1	1	1	1
041	43T46488	VALVE, 2WAY, VPV				1	1
042	43T46455	COIL, VALVE, 2WAY, TEV-SMOAJ2170A1	4	4	4	4	4
043	43T46403	COIL, SOLENOID, VPV-MOAJ510B0	1	1	1	1	1
044	43T46405	COIL, VALVE, 2WAY, FQ-G593	4	4	4	3	3
045	43T50357	SENSOR ASSY, LOW PRESSURE	1	1	1	1	1
046	43T50358	SENSOR ASSY, HIGH PRESSURE	1	1	1	1	1
047	43T63359	SWITCH, PRESSURE	2	2	2	2	2
048	43T57303	HEATER, CASE, 29W 240V	2	2	2	2	2
049	43T57304	HEATER, CASE, 55W 240V	1	1	1	1	1
050	43T48314	SEPARATOR	1	1	1	1	1
051	43T48315	TANK, LIQUID	1	1	1	1	1
052	43T48313	ACCUMULATOR	1	1	1	1	1
053	43T43523	CONDENSER ASSY, TWO ROW, LEFT	1	1	1		
054	43T43524	CONDENSER ASSY, TWO ROW, RIGHT	1	1	1		
055	43T43525	CONDENSER ASSY, THREE ROW, LEFT				1	1
056	43T43526	CONDENSER ASSY, THREE ROW, RIGHT				1	1

Ref. No.	Part No.	Description	Q'ty/Set MMY-				
			MAP0806 HT8(J)P	MAP1006 HT8(J)P	MAP1206 HT8(J)P	MAP1406 HT8(J)P	MAP1606 HT8(J)P
057	43T47388	STRAINER	5	5	5	5	5
058	43T47389	STRAINER	1	1	1	1	1
059	43T47390	STRAINER	2	2	2	1	1
060	43T47392	STRAINER				2	2
061							
062	43T47394	STRAINER	1	1	1		
063	43T47395	STRAINER				1	1
064	43T49348	RUBBER, SUPPORTER, PIPE	1	1	1	2	2
065	43T49349	RUBBER, SUPPORTER, PIPE	1	1	1	6	6
066	43T49350	RUBBER, SUPPORTER, PIPE	3	3	3	1	1
067	43T49351	RUBBER, SUPPORTER, PIPE	2	2	2	5	5
068	43T49352	RUBBER, SUPPORTER, PIPE	1	1	1	3	3
069	43T49353	RUBBER, SUPPORTER, PIPE	1	1	1	3	3
070	43T49354	RUBBER, SUPPORTER, PIPE	2	2	2	2	2
071	43T49355	RUBBER, SUPPORTER, PIPE	1	1	1	2	2
072	43T49347	RUBBER, SUPPORTER, PIPE	4	4	4	4	4
073	43T49365	RUBBER, SUPPORTER, PIPE				1	1
074	43T49360	RUBBER, SUPPORTER, PIPE	2	2	2		
075	43T49358	BAND, FIX	5	5	5	8	8
076	43T19333	HOLDER, SENSOR	11	11	11	15	15
077	43T01310	MARK, TOSHIBA	1	1	1	1	1
078	43T63358	HOLDER, NFC	1	1	1	1	1
079	43T39351	NUT, FLANGE	1	1	1	1	1
080	43T39350	WASHER	1	1	1	1	1
081	43T47385	BOLT, COMPRESSOR	6	6	6	6	6
082	43T49357	RUBBER, CUSHION	6	6	6	6	6
083	43T47333	BONNET, 1/2 IN	1	1	1		
084	43T47332	BONNET, 3/8 IN	1	1	1	1	1
085	43T47334	BONNET, 5/8 IN				1	1
086	43T49338	PLUG, FUSIBLE	1	1	1	1	1
087	43T47374	TUBE, CAPILLARY, ID 0.8	1	1	1	1	1
088	43T47375	TUBE, CAPILLARY, ID 1.0	1	1	1	1	1
089	43T47376	TUBE, CAPILLARY, ID 1.2	1	1	1	1	1
090	43T85599 *1 43T85600 *2	OWNER'S MANUAL	1	1	1	1	1
091							
092	43T00700	MOTOR,BASE	1	1	1	1	1
093	43T46490	COIL, VALVE, 2WAY				1	1

*1) For HT8(J)P-E model
*2) For HT8(J)P-TR model

Ref. No.	Part No.	Description	Q'ty/Set MMY-		
			MAP1806 HT8(J)P	MAP2006 HT8(J)P	MAP2206 HT8(J)P
001	43T20341	FAN, PROPELLER	2	2	2
002	43T20343	MOTOR, FAN, DC530-620V, 3500L	2	2	2
003	43T19361	CABINET, AIR OUTLET	2	2	2
004					
005	43T19359	GUARD, FAN	2	2	2
006	43T00663	CABINET ASSY, SIDE, LEFT	1	1	1
007	43T00664	CABINET ASSY, SIDE, RIGHT	1	1	1
008	43T00665	CABINET, AIR INLET, FRONT	1	1	1
009	43T00666	CABINET, AIR INLET, BACK	1	1	1
010					
011	43T00622	CABINET, AIR INLET, BACK	2	2	2
012	43T00667	CABINET ASSY, FRONT, DOWN	1	1	1
013	43T00668	CABINET ASSY, BACK, DOWN	1	1	1
014	43T00669	CABINET ASSY, FRONT, DOWN	1	1	1
015	43T00618	CABINET ASSY, BACK, DOWN	1	1	1
016	43T00623	PANEL	1	1	1
017					
018	43T41485	C0MPRESSOR, RA641A3TB-20M	2	2	2
019	43T46393	VALVE, BALL, 25.4	1	1	1
020	43T46456	VALVE, BALL, SBV-JA6GTC-1	1	1	1
021	43T46366	VALVE, PACKED, 9.52	1	1	1
022					
023					
024	43T46445	VALVE, CHECK, UCV-A1506DRQ5	2	2	2
025	43T46446	VALVE, CHECK, UCV-A1507DR	1	1	1
026					
027	43T46399	VALVE, CHECK, BCV-603DY	1	1	1
028	43T46400	VALVE, CHECKED, BCV-302DY	3	3	3
029	43T46409	J0INT,CHECK	3	3	3
030	43T46447	VALVE, PMV, PAM-BA2YGTF-1 (φ4.8)	1	1	1
031	43T46448	VALVE, PMV, UKV-25D100 (φ2.5)	2	2	2
032	43T46449	COIL, PMV	1	1	1
033	43T46450	COIL, PMV	1	1	1
034	43T46451	COIL, PMV	1	1	1
035	43T46452	VALVE, 4WAY, SHF-35B-67-04	1	1	1
036	43T46453 *2	COIL, SOLENOID, AC220V-240 50HZ	1	1	1
037	43T46454	VALVE, 2WAY, TEV-S1220DQ50	4	4	4
038	43T46411	VALVE , 2WAY, VPV-603DQ2	1	1	1
039	43T46412	VALVE, 2WAY, FDF3A06	2	2	2
040	43T46459	VALVE, 2WAY, FDF6A42	1	1	1
041	43T46488	VALVE, 2WAY, VPV	1	1	1
042	43T46455	COIL, VALVE, 2WAY, TEV-SMOAJ2170A1	4	4	4
043	43T46403	COIL, SOLENOID, VPV-MOAJ510B0	1	1	1
044	43T46405	COIL, VALVE, 2WAY, FQ-G593	3	3	3
045	43T50357	SENSOR ASSY, LOW PRESSURE	1	1	1
046	43T50358	SENSOR ASSY, HIGH PRESSURE	1	1	1
047	43T63359	SWITCH, PRESSURE	2	2	2
048	43T57303	HEATER, CASE, 29W 240V	2	2	2
049	43T57304	HEATER, CASE, 55W 240V	1	1	1
050	43T48314	SEPARATOR	1	1	1
051	43T48316	TANK, LIQUID	1	1	1
052	43T48312	ACCUMULATOR	1	1	1
053					
054					
055	43T43527	CONDENSER ASSY, THREE ROW, LEFT	1	1	1
056	43T43528	CONDENSER ASSY, THREE ROW, RIGHT	1	1	1

Ref. No.	Part No.	Description	Q'ty/Set MMY-		
			MAP1806 HT8(J)P	MAP2006 HT8(J)P	MAP2206 HT8(J)P
057	43T47388	STRAINER	5	5	5
058	43T47389	STRAINER	1	1	1
059	43T47390	STRAINER	1	1	1
060	43T47392	STRAINER	1	1	1
061					
062					
063	43T47395	STRAINER	1	1	1
064	43T47400	STRAINER	1	1	1
065	43T49348	RUBBER, SUPPORTER, PIPE	3	3	3
066	43T49349	RUBBER, SUPPORTER, PIPE	5	5	5
067	43T49350	RUBBER, SUPPORTER, PIPE	3	3	3
068	43T49351	RUBBER, SUPPORTER, PIPE	3	3	3
069	43T49352	RUBBER, SUPPORTER, PIPE	4	4	4
070	43T49353	RUBBER, SUPPORTER, PIPE	3	3	3
071	43T49354	RUBBER, SUPPORTER, PIPE	2	2	2
072	43T49355	RUBBER, SUPPORTER, PIPE	1	1	1
073	43T49347	RUBBER, SUPPORTER, PIPE	3	3	3
074	43T49365	RUBBER, SUPPORTER, PIPE	1	1	1
075	43T49360	RUBBER, SUPPORTER, PIPE	0	0	0
076	43T49358	BAND, FIX	7	7	7
077	43T19333	HOLDER, SENSOR	15	15	15
078	43T01310	MARK, TOSHIBA	1	1	1
079	43T63358	HOLDER, NFC	1	1	1
080	43T39351	NUT, FLANGE	2	2	2
081	43T39350	WASHER	2	2	2
082	43T47385	BOLT, COMPRESSOR	6	6	6
083	43T49357	RUBBER, CUSHION	6	6	6
084	43T47401	BONNET, 3/4 IN	1	1	1
085	43T47332	BONNET, 3/8 IN	1	1	1
086					
087	43T49338	PLUG, FUSIBLE	1	1	1
088	43T47374	TUBE, CAPILLARY, ID 0.8	1	1	1
089	43T47375	TUBE, CAPILLARY, ID 1.0	1	1	1
090	43T47376	TUBE, CAPILLARY, ID 1.2	1	1	1
091	43T85599 *1 43T85600 *2	OWNER'S MANUAL	1	1	1
092	43T00700	MOTOR,BASE	2	2	2
093	43T46490	COIL, VALVE, 2WAY	1	1	1

*1) For HT8(J)P-E model
*2) For HT8(J)P-TR model

For T8(J)P, T7(J)P, T8P-SG, T8(J)P-ID, T8(J)P-T model

Ref. No.	Part No.	Description	Q'ty/Set MMY-			
			MAP0806 T∗(J)P	MAP1006 T∗(J)P	MAP1206 T∗(J)P	MAP14B6 T∗(J)P
001	43T20341	FAN, PROPELLER	1	1	1	1
002	43T20342	MOTOR, FAN, DC530-620V, 2300L	1	1	1	1
003	43T19354	CABINET, AIR OUTLET	1	1	1	1
005	43T19353	GUARD, FAN	1	1	1	1
006	43T00613	CABINET ASSY, SIDE, LEFT	1	1	1	1
007	43T00614	CABINET ASSY, SIDE, RIGHT	1	1	1	1
008	43T00624	CABINET, AIR INLET, FRONT	1	1	1	1
009	43T00620	CABINET, AIR INLET, BACK	1	1	1	1
012	43T00615	CABINET ASSY, FRONT, DOWN	1	1	1	1
013	43T00616	CABINET ASSY, BACK, DOWN	1	1	1	1
016	43T00623	PANEL	1	1	1	1
017	43T41458	C0MPRESSOR, RA421A3TB-20MD	2	2	2	2
019	43T46393	VALVE, BALL, 25.4	1	1	1	1
021	43T46366	VALVE, PACKED, 9.52	1	1	1	1
022	43T46374	VALVE, PACKED, 12.7	1	1	1	1
023	43T46444	VALVE, CHECK, UCV-A1505DRQ5	1	1	1	1
026	43T46398	VALVE, CHECKED, BCV-804DY	2	2	2	2
027	43T46399	VALVE, CHECK, BCV-603DY	1	1	1	1
028	43T46400	VALVE, CHECKED, BCV-302DY	4	4	4	4
029	43T46409	J0INT,CHECK	3	3	3	3
030	43T46447	VALVE, PMV, PAM-BA2YGTF-1 (φ4.8)	1	1	1	1
031	43T46448	VALVE, PMV, UKV-25D100 (φ2.5)	1	1	1	1
032	43T46449	COIL, PMV	1	1	1	1
033	43T46450	COIL, PMV				
034	43T46451	COIL, PMV	1	1	1	1
037	43T46454	VALVE, 2WAY, TEV-S1220DQ50	4	4	4	4
038	43T46411	VALVE , 2WAY, VPV-603DQ2	1	1	1	1
039	43T46412	VALVE, 2WAY, FDF3A06	2	2	2	2
042	43T46455 *1,3,4,5	COIL, VALVE, 2WAY, TEV-SMOAJ2170A1	4	4	4	4
	43T46458 *2	COIL, VALVE, 2WAY, TEV-SMOAQ2247A1	4	4	4	4
043	43T46403 *1,3,4,5	COIL, SOLENOID, VPV-MOAJ510B0	1	1	1	1
	43T46404 *2	COIL, SOLENOID, VPV-MOAQ1843A0	1	1	1	1
044	43T46405 *1,3,4,5	COIL, VALVE, 2WAY, FQ-G593	2	2	2	2
	43T46406 *2	COIL, VALVE, 2WAY, FQ-D640	2	2	2	2
045	43T50357	SENSOR ASSY, LOW PRESSURE	1	1	1	1
046	43T50358	SENSOR ASSY, HIGH PRESSURE	1	1	1	1
047	43T63359	SWITCH, PRESSURE	2	2	2	2
048	43T57303	HEATER, CASE, 29W 240V	2	2	2	2
049	43T57304	HEATER, CASE, 55W 240V	1	1	1	1
050	43T48314	SEPARATOR	1	1	1	1
051	43T48315	TANK, LIQUID	1	1	1	1
052	43T48313	ACCUMULATOR	1	1	1	1
053	43T43523	CONDENSER ASSY, TWO ROW, LEFT	1	1	1	1
054	43T43524	CONDENSER ASSY, TWO ROW, RIGHT	1	1	1	1

*1) For T8(J)P
*2) For T7(J)P
*3) For T8P-SG
*4) For T8(J)P-ID
*5) For T8(J)P-T

Ref. No.	Part No.	Description	Q'ty/Set MMY-			
			MAP0806 T∗(J)P	MAP1006 T∗(J)P	MAP1206 T∗(J)P	MAP14B6 T∗(J)P
057	43T47388	STRAINER	5	5	5	5
058	43T47389	STRAINER	1	1	1	1
059	43T47390	STRAINER	2	2	2	2
062	43T47394	STRAINER	1	1	1	1
063						
064	43T49348	RUBBER, SUPPORTER, PIPE	2	2	2	2
065	43T49349	RUBBER, SUPPORTER, PIPE	2	2	2	2
066	43T49350	RUBBER, SUPPORTER, PIPE	3	3	3	3
067	43T49351	RUBBER, SUPPORTER, PIPE	2	2	2	2
068	43T49352	RUBBER, SUPPORTER, PIPE	1	1	1	1
069	43T49353	RUBBER, SUPPORTER, PIPE	1	1	1	1
070	43T49354	RUBBER, SUPPORTER, PIPE	2	2	2	2
071	43T49355	RUBBER, SUPPORTER, PIPE	1	1	1	1
072	43T49347	RUBBER, SUPPORTER, PIPE	4	4	4	4
074	43T49360	RUBBER, SUPPORTER, PIPE	2	2	2	2
075	43T49358	BAND, FIX	6	6	6	6
076	43T19333	HOLDER, SENSOR	11	11	11	11
077	43T01310	MARK, TOSHIBA	1	1	1	1
078	43T63358	HOLDER, NFC	1	1	1	1
079	43T39351	NUT, FLANGE	1	1	1	1
080	43T39350	WASHER	1	1	1	1
081	43T47385	BOLT, COMPRESSOR	6	6	6	6
082	43T49357	RUBBER, CUSHION	6	6	6	6
083	43T47333	BONNET, 1/2 IN	1	1	1	1
084	43T47332	BONNET, 3/8 IN	1	1	1	1
086	43T49338	PLUG, FUSIBLE	1	1	1	1
087	43T47374	TUBE, CAPILLARY, ID 0.8	1	1	1	1
088	43T47375	TUBE, CAPILLARY, ID 1.0	1	1	1	1
089	43T47376	TUBE, CAPILLARY, ID 1.2	1	1	1	1
090	43T85606 *1	OWNER'S MANUAL	1	1	1	1
	43T85607 *2		1	1	1	1
	43T85608 *3		1	1	1	1
	43T85609 *4		1	1	1	1
	43T85610 *5		1	1	1	1
091						
092	43T00700	MOTOR,BASE	1	1	1	1

*1) For T8(J)P
*2) For T7(J)P
*3) For T8P-SG
*4) For T8(J)P-ID
*5) For T8(J)P-T

Ref. No.	Part No.	Description	Q'ty/Set MMY-		
			MAP1406 T∗(J)P	MAP1606 T∗(J)P	MAP18B6 T∗(J)P
001	43T20341	FAN, PROPELLER	1	1	1
002	43T20342	MOTOR, FAN, DC530-620V, 2300L	1	1	1
003	43T19354	CABINET, AIR OUTLET	1	1	1
004	43T19355	CABINET, SIDE, UP	2	2	2
005	43T19353	GUARD, FAN	1	1	1
006	43T00613	CABINET ASSY, SIDE, LEFT	1	1	1
007	43T00614	CABINET ASSY, SIDE, RIGHT	1	1	1
010	43T00625	CABINET, AIR INLET, FRONT	1	1	1
011	43T00622	CABINET, AIR INLET, BACK	1	1	1
014	43T00617	CABINET ASSY, FRONT, DOWN	1	1	1
015	43T00618	CABINET ASSY, BACK, DOWN	1	1	1
016	43T00623	PANEL	1	1	1
018	43T41485	C0MPRESSOR, RA641A3TB-20M	2	2	2
019	43T46393	VALVE, BALL, 25.4	1	1	1
020	43T46381	VALVE, BALL, SBV-JA5GTC-1	1	1	1
021	43T46366	VALVE, PACKED, 9.52	1	1	1
023	43T46444	VALVE, CHECK, UCV-A1505DRQ5	2	2	2
024	43T46445	VALVE, CHECK, UCV-A1506DRQ5	1	1	1
027	43T46399	VALVE, CHECK, BCV-603DY	1	1	1
028	43T46400	VALVE, CHECKED, BCV-302DY	3	3	3
029	43T46409	J0INT,CHECK	3	3	3
030	43T46447	VALVE, PMV, PAM-BA2YGTF-1 (φ4.8)	1	1	1
031	43T46448	VALVE, PMV, UKV-25D100 (φ2.5)	2	2	2
032	43T46449	COIL, PMV	1	1	1
033	43T46450	COIL, PMV	1	1	1
034	43T46451	COIL, PMV	1	1	1
037	43T46454	VALVE, 2WAY, TEV-S1220DQ50	4	4	4
038	43T46411	VALVE , 2WAY, VPV-603DQ2	1	1	1
039	43T46412	VALVE, 2WAY, FDF3A06	2	2	2
042	43T46455 *1,3,4,5	COIL, VALVE, 2WAY, TEV-SMOAJ2170A1	4	4	4
	43T46458 *2	COIL, VALVE, 2WAY, TEV-SMOAQ2247A1	4	4	4
043	43T46403 *1,3,4,5	COIL, SOLENOID, VPV-MOAJ510B0	1	1	1
	43T46404 *2	COIL, SOLENOID, VPV-MOAQ1843A0	1	1	1
044	43T46405 *1,3,4,5	COIL, VALVE, 2WAY, FQ-G593	2	2	2
	43T46406 *2	COIL, VALVE, 2WAY, FQ-D640	2	2	2
045	43T50357	SENSOR ASSY, LOW PRESSURE	1	1	1
046	43T50358	SENSOR ASSY, HIGH PRESSURE	1	1	1
047	43T63359	SWITCH, PRESSURE	2	2	2
048	43T57303	HEATER, CASE, 29W 240V	2	2	2
049	43T57304	HEATER, CASE, 55W 240V	1	1	1
050	43T48314	SEPARATOR	1	1	1
051	43T48315	TANK, LIQUID	1	1	1
052	43T48313	ACCUMULATOR	1	1	1
055	43T43525	CONDENSER ASSY, THREE ROW, LEFT	1	1	1

*1) For T8(J)P
*2) For T7(J)P
*3) For T8P-SG
*4) For T8(J)P-ID
*5) For T8(J)P-T

Ref. No.	Part No.	Description	Q'ty/Set MMY-		
			MAP1406 T∗(J)P	MAP1606 T∗(J)P	MAP18B6 T∗(J)P
056	43T43526	CONDENSER ASSY, THREE ROW, RIGHT	1	1	1
057	43T47388	STRAINER	5	5	5
058	43T47389	STRAINER	1	1	1
059	43T47390	STRAINER	1	1	1
060	43T47392	STRAINER	2	2	2
063	43T47395	STRAINER	1	1	1
064	43T49348	RUBBER, SUPPORTER, PIPE	2	2	2
065	43T49349	RUBBER, SUPPORTER, PIPE	6	6	6
066	43T49350	RUBBER, SUPPORTER, PIPE	1	1	1
067	43T49351	RUBBER, SUPPORTER, PIPE	5	5	5
068	43T49352	RUBBER, SUPPORTER, PIPE	3	3	3
069	43T49353	RUBBER, SUPPORTER, PIPE	3	3	3
070	43T49354	RUBBER, SUPPORTER, PIPE	2	2	2
071	43T49355	RUBBER, SUPPORTER, PIPE	2	2	2
072	43T49347	RUBBER, SUPPORTER, PIPE	4	4	4
073	43T49365	RUBBER, SUPPORTER, PIPE	1	1	1
075	43T49358	BAND, FIX	8	8	8
076	43T19333	HOLDER, SENSOR	15	15	15
077	43T01310	MARK, TOSHIBA	1	1	1
078	43T63358	HOLDER, NFC	1	1	1
079	43T39351	NUT, FLANGE	1	1	1
080	43T39350	WASHER	1	1	1
081	43T47385	BOLT, COMPRESSOR	6	6	6
082	43T49357	RUBBER, CUSHION	6	6	6
084	43T47332	BONNET, 3/8 IN	1	1	1
085	43T47334	BONNET, 5/8 IN	1	1	1
086	43T49338	PLUG, FUSIBLE	1	1	1
087	43T47374	TUBE, CAPILLARY, ID 0.8	1	1	1
088	43T47375	TUBE, CAPILLARY, ID 1.0	1	1	1
089	43T47376	TUBE, CAPILLARY, ID 1.2	1	1	1
090	43T85606 *1	OWNER'S MANUAL	1	1	1
	43T85607 *2		1	1	1
	43T85608 *3		1	1	1
	43T85609 *4		1	1	1
	43T85610 *5		1	1	1
091					
092	43T00700	MOTOR,BASE	1	1	1

*1) For T8(J)P
*2) For T7(J)P
*3) For T8P-SG
*4) For T8(J)P-ID
*5) For T8(J)P-T

Ref. No.	Part No.	Description	Q'ty/Set MMY-		
			MAP1806 T∗(J)P	MAP2006 T∗(J)P	MAP2206 T∗(J)P
001	43T20341	FAN, PROPELLER	2	2	2
002	43T20343	MOTOR, FAN, DC530-620V, 3500L	2	2	2
003	43T19361	CABINET, AIR OUTLET	2	2	2
005	43T19353	GUARD, FAN	2	2	2
006	43T00663	CABINET ASSY, SIDE, LEFT	1	1	1
007	43T00664	CABINET ASSY, SIDE, RIGHT	1	1	1
008	43T00665	CABINET, AIR INLET, FRONT	1	1	1
009	43T00666	CABINET, AIR INLET, BACK	1	1	1
011	43T00622	CABINET, AIR INLET, BACK	2	2	2
012	43T00667	CABINET ASSY, FRONT, DOWN	1	1	1
013	43T00668	CABINET ASSY, BACK, DOWN	1	1	1
014	43T00669	CABINET ASSY, FRONT, DOWN	1	1	1
015	43T00618	CABINET ASSY, BACK, DOWN	1	1	1
016	43T00623	PANEL	1	1	1
018	43T41485	C0MPRESSOR, RA641A3TB-20M	2	2	2
019	43T46393	VALVE, BALL, 25.4	1	1	1
020	43T46456	VALVE, BALL, SBV-JA6GTC-1	1	1	1
021	43T46366	VALVE, PACKED, 9.52	1	1	1
024	43T46445	VALVE, CHECK, UCV-A1506DRQ5	2	2	2
025	43T46446	VALVE, CHECK, UCV-A1507DR	1	1	1
027	43T46399	VALVE, CHECK, BCV-603DY	1	1	1
028	43T46400	VALVE, CHECKED, BCV-302DY	3	3	3
029	43T46409	J0INT,CHECK	3	3	3
030	43T46447	VALVE, PMV, PAM-BA2YGTF-1 (φ4.8)	1	1	1
031	43T46448	VALVE, PMV, UKV-25D100 (φ2.5)	2	2	2
032	43T46449	COIL, PMV	1	1	1
033	43T46450	COIL, PMV	1	1	1
034	43T46451	COIL, PMV	1	1	1
037	43T46454	VALVE, 2WAY, TEV-S1220DQ50	4	4	4
038	43T46411	VALVE , 2WAY, VPV-603DQ2	1	1	1
039	43T46412	VALVE, 2WAY, FDF3A06	2	2	2
042	43T46455 *1,3,4,5	COIL, VALVE, 2WAY, TEV-SMOAJ2170A1	4	4	4
	43T46458 *2	COIL, VALVE, 2WAY, TEV-SMOAQ2247A1	4	4	4
043	43T46403 *1,3,4,5	COIL, SOLENOID, VPV-MOAJ510B0	1	1	1
	43T46404 *2	COIL, SOLENOID, VPV-MOAQ1843A0	1	1	1
044	43T46405 *1,3,4,5	COIL, VALVE, 2WAY, FQ-G593	2	2	2
	43T46406 *2	COIL, VALVE, 2WAY, FQ-D640	2	2	2
045	43T50357	SENSOR ASSY, LOW PRESSURE	1	1	1
046	43T50358	SENSOR ASSY, HIGH PRESSURE	1	1	1
047	43T63359	SWITCH, PRESSURE	2	2	2
048	43T57303	HEATER, CASE, 29W 240V	2	2	2
049	43T57304	HEATER, CASE, 55W 240V	1	1	1
050	43T48314	SEPARATOR	1	1	1
051	43T48316	TANK, LIQUID	1	1	1
052	43T48312	ACCUMULATOR	1	1	1
055	43T43527	CONDENSER ASSY, THREE ROW, LEFT	1	1	1

*1) For T8(J)P
*2) For T7(J)P
*3) For T8P-SG
*4) For T8(J)P-ID
*5) For T8(J)P-T

Ref. No.	Part No.	Description	Q'ty/Set MMY-		
			MAP1806 T∗(J)P	MAP2006 T∗(J)P	MAP2206 T∗(J)P
056	43T43528	CONDENSER ASSY, THREE ROW, RIGHT	1	1	1
057	43T47388	STRAINER	5	5	5
058	43T47389	STRAINER	1	1	1
059	43T47390	STRAINER	1	1	1
060	43T47392	STRAINER	1	1	1
063	43T47395	STRAINER	1	1	1
064	43T47400	STRAINER	1	1	1
065	43T49348	RUBBER, SUPPORTER, PIPE	3	3	3
066	43T49349	RUBBER, SUPPORTER, PIPE	5	5	5
067	43T49350	RUBBER, SUPPORTER, PIPE	3	3	3
068	43T49351	RUBBER, SUPPORTER, PIPE	3	3	3
069	43T49352	RUBBER, SUPPORTER, PIPE	4	4	4
070	43T49353	RUBBER, SUPPORTER, PIPE	3	3	3
071	43T49354	RUBBER, SUPPORTER, PIPE	2	2	2
072	43T49355	RUBBER, SUPPORTER, PIPE	1	1	1
073	43T49347	RUBBER, SUPPORTER, PIPE	3	3	3
074	43T49365	RUBBER, SUPPORTER, PIPE	1	1	1
076	43T49358	BAND, FIX	7	7	7
077	43T19333	HOLDER, SENSOR	15	15	15
078	43T01310	MARK, TOSHIBA	1	1	1
079	43T63358	HOLDER, NFC	1	1	1
080	43T39351	NUT, FLANGE	2	2	2
081	43T39350	WASHER	2	2	2
082	43T47385	BOLT, COMPRESSOR	6	6	6
083	43T49357	RUBBER, CUSHION	6	6	6
084	43T47401	BONNET, 3/4 IN	1	1	1
085	43T47332	BONNET, 3/8 IN	1	1	1
087	43T49338	PLUG, FUSIBLE	1	1	1
088	43T47374	TUBE, CAPILLARY, ID 0.8	1	1	1
089	43T47375	TUBE, CAPILLARY, ID 1.0	1	1	1
090	43T47376	TUBE, CAPILLARY, ID 1.2	1	1	1
091	43T85606 *1	OWNER'S MANUAL	1	1	1
	43T85607 *2		1	1	1
	43T85608 *3		1	1	1
	43T85609 *4		1	1	1
	43T85610 *5		1	1	1
092	43T00700	MOTOR,BASE	2	2	2

*1) For T8(J)P
*2) For T7(J)P
*3) For T8P-SG
*4) For T8(J)P-ID
*5) For T8(J)P-T

Ref. No.	Part No.	Description	Q'ty / Set MMY-			
			MAP1606 HT8P-C	MAP1806 HT8P-C	MAP2006 HT8P-C	MAP2206 HT8P-C
001	43T20341	FAN, PROPELLER	1	2	2	2
002	43T20342	MOTOR, FAN, DC530-620V, 2300L	1			
002	43T20343	MOTOR, FAN, DC530-620V, 3500L		2	2	2
003	43T19354	CABINET, AIR OUTLET	1			
003	43T19361	CABINET, AIR OUTLET		2	2	2
004	43T19355	CABINET, SIDE, UP	2			
005	43T19353	GUARD, FAN	1	2	2	2
006	43T00613	CABINET ASSY, SIDE, LEFT	1			
006	43T00663	CABINET ASSY, SIDE, LEFT		1	1	1
007	43T00614	CABINET ASSY, SIDE, RIGHT	1			
007	43T00664	CABINET ASSY, SIDE, RIGHT		1	1	1
008	43T00665	CABINET, AIR INLET, FRONT		1	1	1
009	43T00666	CABINET, AIR INLET, BACK		1	1	1
010	43T00625	CABINET, AIR INLET, FRONT	1			
011	43T00622	CABINET, AIR INLET, BACK	1	2	2	2
012	43T00667	CABINET ASSY, FRONT, DOWN		1	1	1
013	43T00668	CABINET ASSY, BACK, DOWN		1	1	1
014	43T00617	CABINET ASSY, FRONT, DOWN	1			
014	43T00669	CABINET ASSY, FRONT, DOWN		1	1	1
015	43T00618	CABINET ASSY, BACK, DOWN	1	1	1	1
016	43T00623	PANEL	1	1	1	1
017						
018	43T41485	C0MPRESSOR, RA641A3TB-20M	2	2	2	2
019	43T46393	VALVE, BALL, 25.4	1	1	1	1
020	43T46381	VALVE, BALL, SBV-JA5GTC-1	1			
020	43T46456	VALVE, BALL, SBV-JA6GTC-1		1	1	1
021	43T46366	VALVE, PACKED, 9.52	1	1	1	1
022						
023	43T46444	VALVE, CHECK, UCV-A1505DRQ5	2			
024	43T46445	VALVE, CHECK, UCV-A1506DRQ5	1	2	2	2
025	43T46446	VALVE, CHECK, UCV-A1507DR		1	1	1
026						
027	43T46399	VALVE, CHECK, BCV-603DY	1	1	1	1
028	43T46400	VALVE, CHECKED, BCV-302DY	3	3	3	3
029	43T46409	J0INT,CHECK	3	3	3	3
030	43T46447	VALVE, PMV, PAM-BA2YGTF-1（φ4.8）	1	1	1	1
031	43T46448	VALVE, PMV, UKV-25D100 (φ2.5）	2	2	2	2
032	43T46449	COIL, PMV	1	1	1	1
033	43T46450	COIL, PMV	1	1	1	1
034	43T46451	COIL, PMV	1	1	1	1
035	43T46452	VALVE, 4WAY, SHF-35B-67-04	1	1	1	1
036	43T46453	COIL, SOLENOID, AC220V-240 50HZ	1	1	1	1
037	43T46454	VALVE, 2WAY, TEV-S1220DQ50	4	4	4	4
038	43T46411	VALVE , 2WAY, VPV-603DQ2	1	1	1	1
039	43T46412	VALVE, 2WAY, FDF3A06	2	2	2	2
040						
041						
042	43T46455	COIL, VALVE, 2WAY, TEV-SMOAJ2170A1	4	4	4	4
043	43T46403	COIL, SOLENOID, VPV-MOAJ510B0	1	1	1	1
044	43T46405	COIL, VALVE, 2WAY, FQ-G593	2	2	2	2
045	43T50357	SENSOR ASSY, LOW PRESSURE	1	1	1	1
046	43T50358	SENSOR ASSY, HIGH PRESSURE	1	1	1	1
047	43T63359	SWITCH, PRESSURE	2	2	2	2
048	43T57303	HEATER, CASE, 29W 240V	2	2	2	2
049	43T57304	HEATER, CASE, 55W 240V	1	1	1	1
050	43T48314	SEPARATOR	1	1	1	1
051	43T48315	TANK, LIQUID	1			
051	43T48316	TANK, LIQUID		1	1	1
052	43T48313	ACCUMULATOR	1			
052	43T48312	ACCUMULATOR		1	1	1
053						
054						
055	43T43525	CONDENSER ASSY, THREE ROW, LEFT	1			
055	43T43527	CONDENSER ASSY, THREE ROW, LEFT		1	1	1

Ref. No.	Part No.	Description	Q'ty / Set MMY-			
			MAP1606 HT8P-C	MAP1806 HT8P-C	MAP2006 HT8P-C	MAP2206 HT8P-C
056	43T43526	CONDENSER ASSY, THREE ROW, RIGHT	1			
056	43T43528	CONDENSER ASSY, THREE ROW, RIGHT		1	1	1
057	43T47388	STRAINER	5	5	5	5
058	43T47389	STRAINER	1	1	1	1
059	43T47390	STRAINER	1	1	1	1
060	43T47392	STRAINER	2	1	1	1
061						
062						
063	43T47395	STRAINER	1	1	1	1
064	43T47400	STRAINER		1	1	1
064	43T49348	RUBBER, SUPPORTER, PIPE	2			
065	43T49348	RUBBER, SUPPORTER, PIPE		3	3	3
065	43T49349	RUBBER, SUPPORTER, PIPE	6			
066	43T49349	RUBBER, SUPPORTER, PIPE		5	5	5
066	43T49350	RUBBER, SUPPORTER, PIPE	1			
067	43T49350	RUBBER, SUPPORTER, PIPE		3	3	3
067	43T49351	RUBBER, SUPPORTER, PIPE	5			
068	43T49351	RUBBER, SUPPORTER, PIPE		3	3	3
068	43T49352	RUBBER, SUPPORTER, PIPE	3			
069	43T49352	RUBBER, SUPPORTER, PIPE		4	4	4
069	43T49353	RUBBER, SUPPORTER, PIPE	3			
070	43T49353	RUBBER, SUPPORTER, PIPE		3	3	3
070	43T49354	RUBBER, SUPPORTER, PIPE	2			
071	43T49354	RUBBER, SUPPORTER, PIPE		2	2	2
071	43T49355	RUBBER, SUPPORTER, PIPE	2			
072	43T49355	RUBBER, SUPPORTER, PIPE		1	1	1
072	43T49347	RUBBER, SUPPORTER, PIPE	4			
073	43T49347	RUBBER, SUPPORTER, PIPE		3	3	3
073	43T49365	RUBBER, SUPPORTER, PIPE	1			
074	43T49365	RUBBER, SUPPORTER, PIPE		1	1	1
075	43T49358	BAND, FIX	8			
076	43T49358	BAND, FIX		7	7	7
076	43T19333	HOLDER, SENSOR	15			
077	43T19333	HOLDER, SENSOR		15	15	15
077	43T01310	MARK, TOSHIBA	1			
078	43T01310	MARK, TOSHIBA		1	1	1
078	43T63358	HOLDER, NFC	1			
079	43T63358	HOLDER, NFC		1	1	1
079	43T39351	NUT, FLANGE	1			
080	43T39351	NUT, FLANGE		2	2	2
080	43T39350	WASHER	1			
081	43T39350	WASHER		2	2	2
081	43T47385	BOLT, COMPRESSOR	6			
082	43T47385	BOLT, COMPRESSOR		6	6	6
082	43T49357	RUBBER, CUSHION	6			
083	43T49357	RUBBER, CUSHION		6	6	6
084	43T47332	BONNET, 3/8 IN	1			
084	43T47401	BONNET, 3/4 IN		1	1	1
085	43T47332	BONNET, 3/8 IN		1	1	1
085	43T47334	BONNET, 5/8 IN	1			
086	43T49338	PLUG, FUSIBLE	1			
087	43T49338	PLUG, FUSIBLE		1	1	1
087	43T47374	TUBE, CAPILLARY, ID 0.8	1			
088	43T47374	TUBE, CAPILLARY, ID 0.8		1	1	1
088	43T47375	TUBE, CAPILLARY, ID 1.0	1			
089	43T47375	TUBE, CAPILLARY, ID 1.0		1	1	1
089	43T47376	TUBE, CAPILLARY, ID 1.2	1			
090	43T47376	TUBE, CAPILLARY, ID 1.2		1	1	1
090	43T85631	OWNER'S MANUAL	1			
091	43T85631	OWNER'S MANUAL		1	1	1
092	43T00700	MOTOR,BASE	1	2	2	2

Inverter Assembly

MMY-MAP0806HT8(J)P, MAP1006HT8(J)P, MAP1206HT8(J)P
MMY-MAP0806HT7(J)P, MAP1006HT7(J)P, MAP1206HT7(J)P
MMY-MAP0806HT8(J)P-ME, MAP1006HT8(J)P-ME, MAP1206HT8(J)P-ME
MMY-MAP0806HT7P-ME, MAP1006HT7P-ME, MAP1206HT7P-ME
MMY-MAP0806HT8(J)P-E, MAP1006HT8(J)P-E, MAP1206HT8(J)P-E
MMY-MAP0806T8(J)P-E, MAP1006T8(J)P-E, MAP1206T8(J)P-E
MMY-MAP0806HT8(J)P-TR, MAP1006HT8(J)P-TR, MAP1206HT8(J)P-TR
MMY-MAP0806HT8P-A, MAP1006HT8P-A, MAP1206HT8P-A
MMY-MAP0806T8(J)P, MAP1006T8(J)P, MAP1206T8(J)P, MAP14B6T8(J)P
MMY-MAP0806T7(J)P, MAP1006T7(J)P, MAP1206T7(J)P, MAP14B6T7(J)P
MMY-MAP0806T8P-SG, MAP1006T8P-SG, MAP1206T8P-SG, MAP14B6T8P-SG
MMY-MAP0806T8(J)P-ID, MAP1006T8(J)P-ID, MAP1206T8(J)P-ID, MAP14B6T8(J)P-ID
MMY-MAP0806T8(J)P-T, MAP1006T8(J)P-T, MAP1206T8(J)P-T, MAP14B6T8(J)P-T

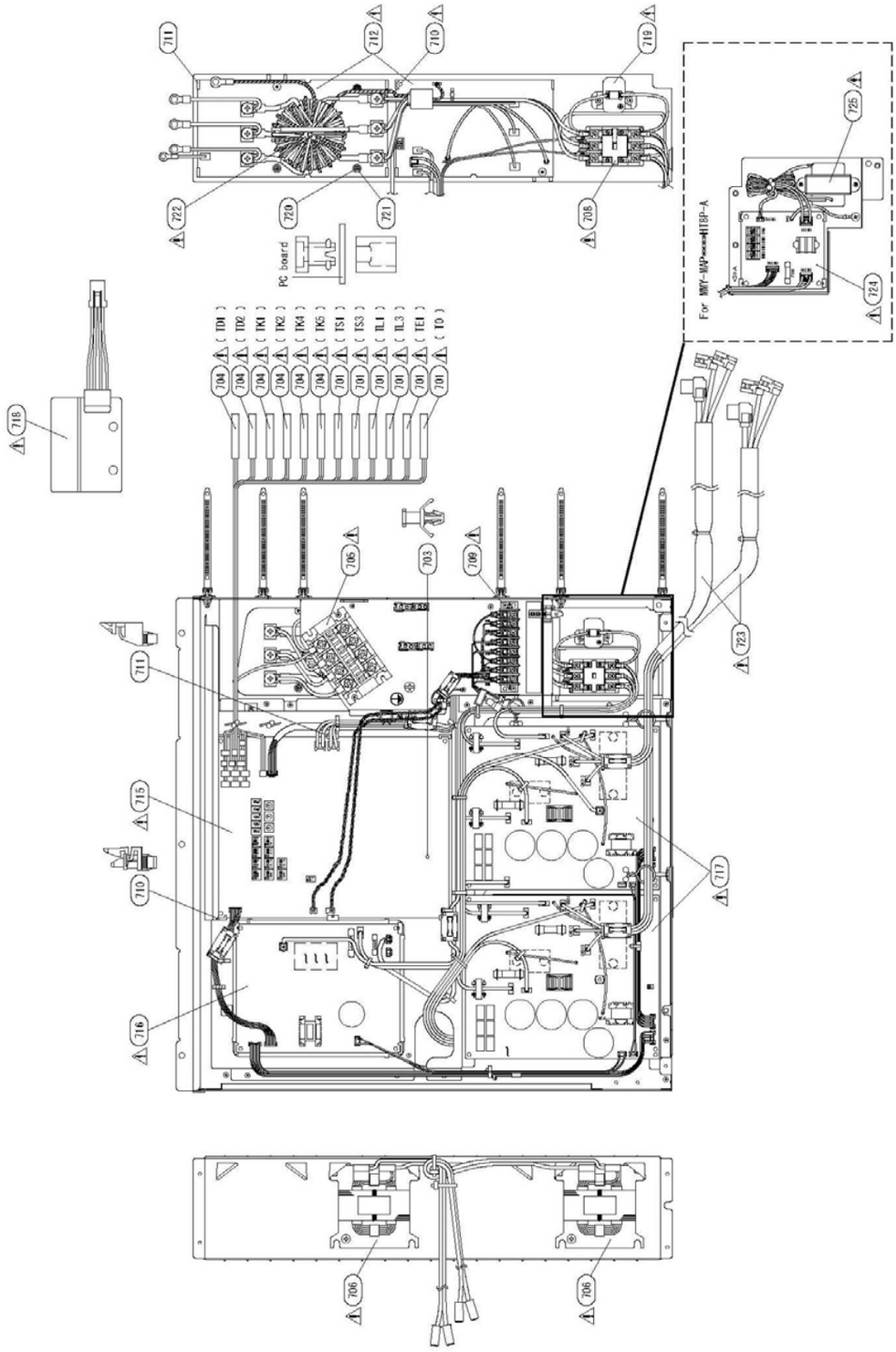

Inverter Assembly
MMY-MAP1406HT8(J)P, MAP1606HT8(J)P
MMY-MAP1406HT7(J)P, MAP1606HT7(J)P
MMY-MAP1406HT8(J)P-ME, MAP1606HT8(J)P-ME
MMY-MAP1406HT7P-ME, MAP1606HT7P-ME
MMY-MAP1406HT8(J)P-E, MAP1606HT8(J)P-E
MMY-MAP1406T8(J)P-E, MAP1606T8(J)P-E
MMY-MAP1406HT8(J)P-TR, MAP1606HT8(J)P-TR
MMY-MAP1406HT8P-A, MAP1606HT8P-A
MMY-MAP1406T8(J)P, MAP1606T8(J)P, MAP1806T8(J)P,
MMY-MAP1406T7(J)P, MAP1606T7(J)P, MAP18B6T7(J)P
MMY-MAP1406T8P-SG, MAP1606T8P-SG, MAP-18B6T8P-SG
MMY-MAP1406T8(J)P-ID, MAP1606T8(J)P-ID, MAP18B6T8(J)P-ID
MMY-MAP1406T8(J)P-T, MAP1606T8(J)P-T, MAP18B6T8(J)P-T
MMY-MAP1606HT8P-C

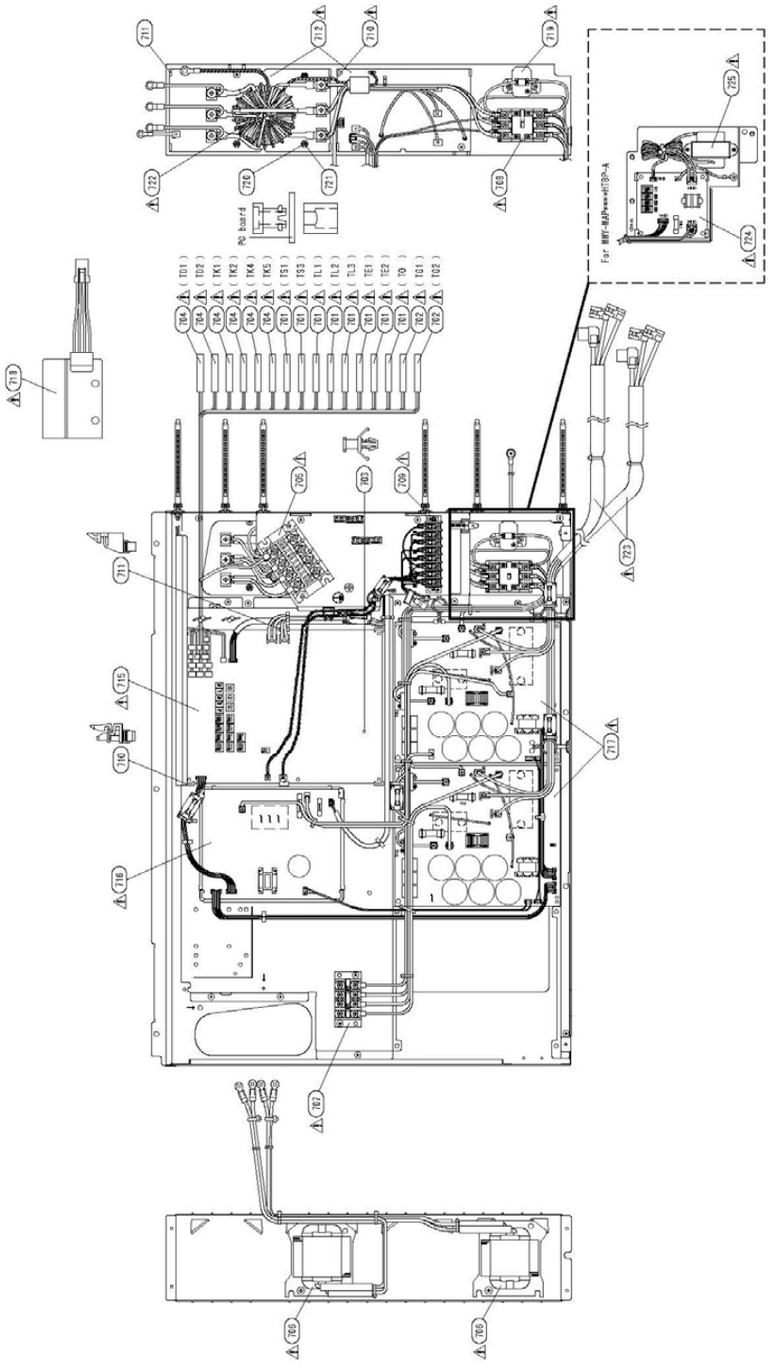

Inverter Assembly

MMY-MAP1806HT8(J)P, MAP2006HT8(J)P, MAP2206HT8(J)P
MMY-MAP1806HT7(J)P, MAP2006HT7(J)P, MAP2206HT7(J)P
MMY-MAP1806HT8(J)P-ME, MAP2006HT8(J)P-ME
MMY-MAP1806HT7P-ME, MAP2006HT7P-ME
MMY-MAP1806HT8(J)P-E, MAP2006HT8(J)P-E, MAP2206HT8(J)P-E
MMY-MAP1806T8(J)P-E, MAP2006T8(J)P-E, MAP2206T8(J)P-E
MMY-MAP1806HT8(J)P-TR, MAP2006HT8(J)P-TR, MAP2206HT8(J)P-TR
MMY-MAP1806HT8P-A, MAP2006HT8P-A
MMY-MAP1806T8(J)P, MAP2006T8(J)P, MAP2206T8(J)P
MMY-MAP1806T7(J)P, MAP2006T7(J)P, MAP2206T7(J)P
MMY-MAP1806T8P-SG, MAP2006T8P-SG, MAP2206T8P-SG
MMY-MAP1806T8(J)P-ID, MAP2006T8(J)P-ID, MAP2206T8(J)P-ID
MMY-MAP1806T8(J)P-T, MAP2006T8(J)P-T, MAP2206T8(J)P-T
MMY-MAP1806HT8P-C, MAP2006HT8P-C, MAP2206HT8P-C

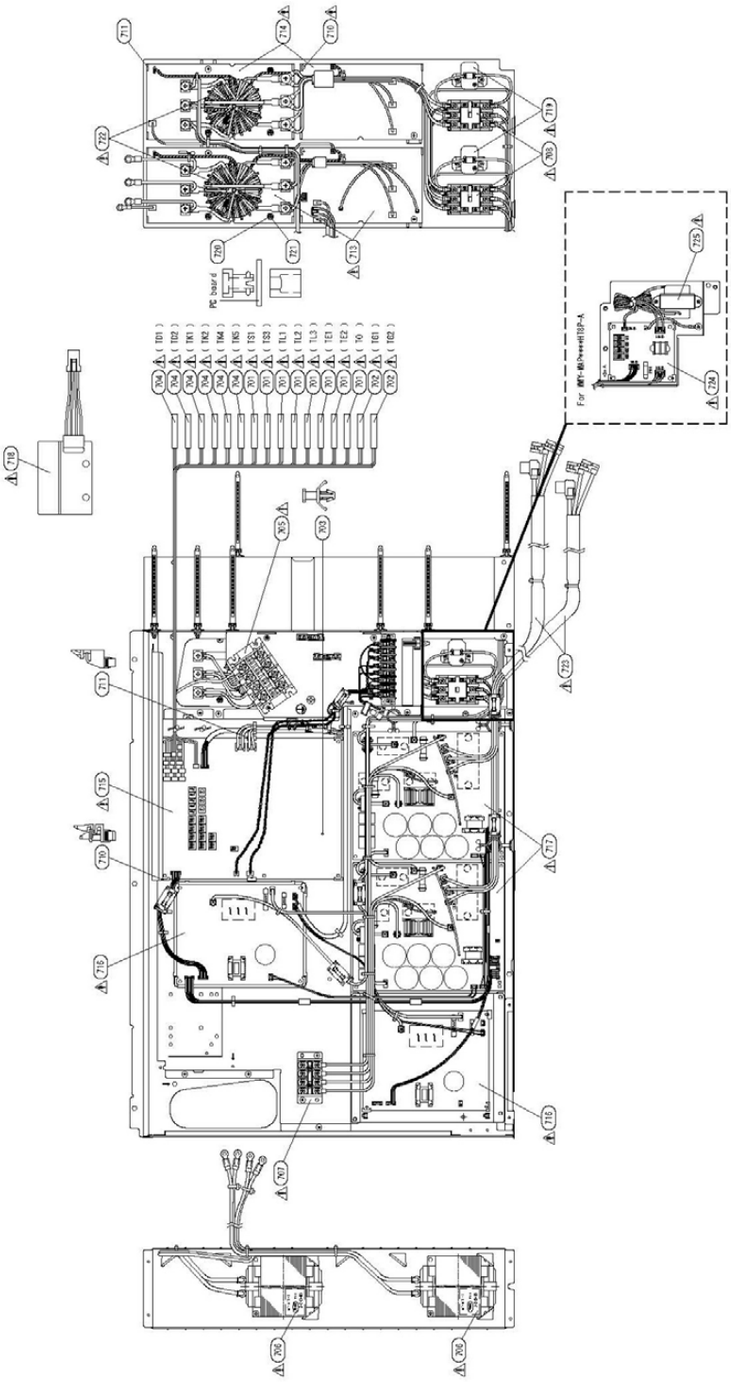

For HT8(J)P, HT7(J)P, HT8(J)P-ME, HT7P-ME, (H)T8(J)P-E, HT8(J)P-TR, HT8P-A model

Ref. No.	Part No.	Description	Q'ty/Set MMY-				
			MAP0806 (H)T∗(J)P∗	MAP1006 (H)T∗(J)P∗	MAP1206 (H)T∗(J)P∗	MAP1406 (H)T∗(J)P∗	MAP1606 (H)T∗(J)P∗
701	43T50347	SENSOR ASSY, SERVICE	4	4	4	8	8
702	43T50356	SERVICE-SENSOR				2	2
703	43T95303	SUPPORTER, ASSY	3	3	3	3	3
704	43T50348	SENSOR,TD(F6)	6	6	6	6	6
705	43T60437	TERMINAL, 4P	1	1	1	1	1
706	43T58317	REACTOR, CH-79	2	2	2		
706	43T58330	REACTOR, CH-90				2	2
707	43T60453	TERMINAL, 4P				1	1
708	43T52320	CONTACTOR, MAGNETIC	1	1	1	1	1
709	43T60457	TERMINAL, 8P	1	1	1	1	1
710	43T95301	SUPORT, SPACER	7	7	7	7	7
711	43T95302	SPACER(EDGE)	10	10	10	10	10
712	43T6V623	PC BOARD ASSY, NOISE FILTER, MCC-1608	1	1	1	1	1
715	43T6W410	PC BOARD ASSY, INTERFACE, MCC-1673	1	1	1	1	1
716	43T6V627	PC BOARD ASSY, FAN-IPDU, MCC-1659	1	1	1	1	1
717	43T6V628	PC BOARD ASSY, COMP-IPDU, MCC-1669	2	2	2		
717	43T6V629	PC BOARD ASSY, COMP-IPDU, MCC-1669				2	2
718	43T6V631	PC BOARD ASSY, NFC, MCC-1667	1	1	1	1	1
719	43T50345	THERMISTOR, PTC	1	1	1	1	1
720	43T96307	BUSHING	3	3	3	3	3
721	43T96306	COLLAR	3	3	3	3	3
722	43T55367	FILTER, LINE	1	1	1	1	1
723	43T60466	LEAD ASSY, COMPRESSOR	2	2	2		
723	43T60467	LEAD ASSY, COMPRESSOR				2	2
724	43T6V646	PC BOARD ASSY, DRC, MCC-1653	1*	1*	1*	1*	1*
725	43T58323	TRANSFORMER (VT-02 VRK)	1*	1*	1*	1*	1*

* For MMY-MAP****HT8P-A

Ref. No.	Part No.	Description	Q'ty/Set MMY-		
			MAP1806 (H)T∗(J)P∗	MAP2006 (H)T∗(J)P∗	MAP2206 (H)T∗(J)P∗
701	43T50347	SENSOR ASSY, SERVICE	8	8	8
702	43T50356	SERVICE-SENSOR	2	2	2
703	43T95303	SUPPORTER, ASSY	3	3	3
704	43T50348	SENSOR,TD(F6)	6	6	6
705	43T60437	TERMINAL, 4P	1	1	1
706	43T58331	REACTOR, CH-65	2	2	2
707	43T60453	TERMINAL, 4P	1	1	1
708	43T52320	CONTACTOR, MAGNETIC	2	2	2
709	43T60457	TERMINAL, 8P	1	1	1
710	43T95301	SUPORT, SPACER	10	10	10
711	43T95302	SPACER(EDGE)	18	18	18
713	43T6V624	PC BOARD ASSY, NOISE FILTER, MCC-1608	1	1	1
714	43T6V625	PC BOARD ASSY, NOISE FILTER, MCC-1608	1	1	1
715	43T6W410	PC BOARD ASSY, INTERFACE, MCC-1673	1	1	1
716	43T6V627	PC BOARD ASSY, FAN-IPDU, MCC-1659	2	2	2
717	43T6V630	PC BOARD ASSY, COMP-IPDU, MCC-1660	2	2	2
718	43T6V631	PC BOARD ASSY, NFC, MCC-1667	1	1	1
719	43T50345	THERMISTOR, PTC	2	2	2
720	43T96307	BUSHING	6	6	6
721	43T96306	COLLAR	6	6	6
722	43T55366	FILTER, LINE	2	2	2
723	43T60468	LEAD ASSY, COMPRESSOR	2	2	2
724	43T6V646	PC BOARD ASSY, DRC, MCC-1653	1*	1*	
725	43T58323	TRANSFORMER (VT-02 VRK)	1	1*	

* For MMY-MAP****HT8P-A

For T8(J)P, T8P-SG, T8(J)P-ID, T8(J)P-T model

Ref. No.	Part No.	Description	Q'ty/Set MMY-			
			MAP0806 T∗(J)P	MAP1006 T∗(J)P	MAP1206 T∗(J)P	MAP14B6 T∗(J)P
701	43T50347	SENSOR ASSY, SERVICE	4	4	4	4
703	43T95303	SUPPORTER, ASSY	3	3	3	3
704	43T50348	SENSOR,TD(F6)	6	6	6	6
705	43T60437	TERMINAL, 4P	1	1	1	1
706	43T58317	REACTOR, CH-79	2	2	2	2
708	43T52320	CONTACTOR, MAGNETIC	1	1	1	1
709	43T60457	TERMINAL, 8P	1	1	1	1
710	43T95301	SUPORT, SPACER	7	7	7	7
711	43T95302	SPACER(EDGE)	10	10	10	10
712	43T6V623	PC BOARD ASSY, NOISE FILTER, MCC-1608	1	1	1	1
715	43T6W410	PC BOARD ASSY, INTERFACE, MCC-1673	1	1	1	1
716	43T6V627	PC BOARD ASSY, FAN IPDU, MCC-1659	1	1	1	1
717	43T6V628	PC BOARD ASSY, COMP-IPDU, MCC-1669	2	2	2	2
718	43T6V631	PC BOARD ASSY, NFC, MCC-1667	1	1	1	1
719	43T50345	THERMISTOR, PTC	1	1	1	1
720	43T96307	BUSHING	3	3	3	3
721	43T96306	COLLAR	3	3	3	3
722	43T55367	FILTER, LINE	1	1	1	1
723	43T60466	LEAD ASSY, COMPRESSOR	2	2	2	2

Ref. No.	Part No.	Description	Q'ty/Set MMY-		
			MAP1406 T∗(J)P	MAP1606 T∗(J)P	MAP18B6 T∗(J)P
701	43T50347	SENSOR ASSY, SERVICE	8	8	8
703	43T95303	SUPPORTER, ASSY	3	3	3
704	43T50348	SENSOR,TD(F6)	6	6	6
705	43T60437	TERMINAL, 4P	1	1	1
706	43T58330	REACTOR, CH-90	2	2	2
707	43T60453	TERMINAL, 4P	1	1	1
708	43T52320	CONTACTOR, MAGNETIC	1	1	1
709	43T60457	TERMINAL, 8P	1	1	1
710	43T95301	SUPORT, SPACER	7	7	7
711	43T95302	SPACER(EDGE)	10	10	10
712	43T6V623	PC BOARD ASSY, NOISE FILTER, MCC-1608	1	1	1
715	43T6W410	PC BOARD ASSY, INTERFACE, MCC-1673	1	1	1
716	43T6V627	PC BOARD ASSY, FAN IPDU, MCC-1659	1	1	1
717	43T6V629	PC BOARD ASSY, COMP-IPDU, MCC-1669	2	2	2
718	43T6V631	PC BOARD ASSY, NFC, MCC-1667	1	1	1
719	43T50345	THERMISTOR, PTC	1	1	1
720	43T96307	BUSHING	3	3	3
721	43T96306	COLLAR	3	3	3
722	43T55367	FILTER, LINE	1	1	1
723	43T60467	LEAD ASSY, COMPRESSOR	2	2	2

Ref. No.	Part No.	Description	Q'ty/Set MMY-		
			MAP1806 T∗(J)P	MAP2006 T∗(J)P	MAP2206 T∗(J)P
701	43T50347	SENSOR ASSY, SERVICE	8	8	8
703	43T95303	SUPPORTER, ASSY	3	3	3
704	43T50348	SENSOR,TD(F6)	6	6	6
705	43T60437	TERMINAL, 4P	1	1	1
706	43T58331	REACTOR, CH-65	2	2	2
707	43T60453	TERMINAL, 4P	1	1	1
708	43T52320	CONTACTOR, MAGNETIC	2	2	2
709	43T60457	TERMINAL, 8P	1	1	1
710	43T95301	SUPORT, SPACER	10	10	10
711	43T95302	SPACER(EDGE)	18	18	18
713	43T6V624	PC BOARD ASSY, NOISE FILTER, MCC-1608	1	1	1
714	43T6V625	PC BOARD ASSY, NOISE FILTER, MCC-1608	1	1	1
715	43T6W410	PC BOARD ASSY, INTERFACE, MCC-1673	1	1	1
716	43T6V627	PC BOARD ASSY, FAN IPDU, MCC-1659	2	2	2
717	43T6V630	PC BOARD ASSY, COMP-IPDU, MCC-1660	2	2	2
718	43T6V631	PC BOARD ASSY, NFC, MCC-1667	1	1	1
719	43T50345	THERMISTOR, PTC	2	2	2
720	43T96307	BUSHING	6	6	6
721	43T96306	COLLAR	6	6	6
722	43T55366	FILTER, LINE	2	2	2
723	43T60468	LEAD ASSY, COMPRESSOR	2	2	2

Ref. No.	Part No.	Description	Q'ty / Set MMY-			
			MAP1606 HT8P-C	MAP1806 HT8P-C	MAP2006 HT8P-C	MAP2206 HT8P-C
701	43T50347	SENSOR ASSY, SERVICE	8	8	8	8
702	43T50356	SENSOR ASSY, SERVICE	2	2	2	2
703	43T95303	SUPPORTER, ASSY	3	3	3	3
704	43T50348	SENSOR,TD(F6)	6	6	6	6
705	43T60437	TERMINAL, 4P	1	1	1	1
706	43T58331	REACTOR, CH-65		2	2	2
	43T58330	REACTOR, CH-90	2			
707	43T60453	TERMINAL, 4P	1	1	1	1
708	43H52001	CONTACTOR, MAGNETIC	1	2	2	2
709	43T60457	TERMINAL, 8P	1	1	1	1
710	43T95301	SUPORT, SPACER	7	10	10	10
711	43T95302	SPACER(EDGE)	10	18	18	18
712	43T6V623	PC BOARD ASSY, NOISE FILTER, MCC-1608	1			
713	43T6V624	PC BOARD ASSY, NOISE FILTER, MCC-1608		1	1	1
714	43T6V625	PC BOARD ASSY, NOISE FILTER, MCC-1608		1	1	1
715	43T6W410	PC BOARD ASSY, INTERFACE, MCC-1673	1	1	1	1
716	43T6V627	PC BOARD ASSY, FAN IPDU, MCC-1659	1	2	2	2
717	43T6V629	PC BOARD ASSY, COMP-IPDU, MCC-1669	2			
717	43T6V630	PC BOARD ASSY, COMP-IPDU, MCC-1660		2	2	2
718	43T6V631	PC BOARD ASSY, NFC, MCC-1667	1	1	1	1
719	43T50345	THERMISTOR, PTC	1	2	2	2
720	43T96307	BUSHING	3	6	6	6
721	43T96306	COLLAR	3	6	6	6
722	43T55367	FILTER, LINE	1			
722	43T55366	FILTER, LINE		2	2	2
723	43T60467	LEAD ASSY, COMPRESSOR	2			
723	43T60468	LEAD ASSY, COMPRESSOR		2	2	2

TOSHIBA CARRIER (THAILAND) CO.,LTD.
144 / 9 Moo 5, Bangkadi Industrial Park, Tivanon Road, Amphur Muang, Pathumthani 12000, Thailand